THE

MYSORE GAZETTE.

o. 26 Published by Authority. of 1880.

BANGALORE, SATURDAY, JULY 3, 1880.

☞ Separate paging is given to this Part in order that it may be filed as a separate compilation.

CONTENTS.

	PAGE.
T I.—Notifications by the Chief Commissioner of Mysore and Coorg.—Notifications by the Government of India...	171—174
T II.—Notifications, &c., by the Judicial Commissioner; Survey and Settlement Commissioner; Superintendent of Inam Settlements; Deputy Accountant General; Public Works Officers; Military Assistant; Inspector General of Registration; Director of Public Instruction; Deputy Surgeon General of Hospitals; Ar[illegible] Bakshi; President of the Municipal Boards; District and Sessions Judges; Deputy Commissioners of Districts.—Season Reports; Meteorological Registers; Postal Notices, &c.	361—378
PART III.—Acts of the Governor General of India in Council, &c.	Nil.
PART IV.—Miscellaneous Papers	Nil.
SUPPLEMENT.—Abstract of Season or Intermediate Reports, &c.	1—2

PART I.

Notifications by the Chief Commissioner of Mysore.

GENERAL DEPARTMENT.

NOTIFICATIONS.

The 28th June 1880.

No. 55.—The Chief Commissioner's attention having lately been attracted to the fact of Government rvants purchasing land at auction sales in satisfaction of arrears of revenue held in the District where ey serve, Mr. Gordon is pleased to issue the following rule :—

Public servants in Mysore and Coorg are prohibited from purchasing any kind of property movable immovable at sales on account of Government dues in the District in which they are employed except th the express permission of the District Officer.

The 1st July 1880.

sale. 56.—Colonel A. C. Hay delivered over and Mr. J. D. Sandford, M. A., received, charge of the the al Commissioner of Mysore and Coorg, on the forenoon of the 1st July 1880.

The 2nd July 1880.

sale will nty not —The undermentioned 3rd Class Hospital Assistants, who will complete seven years' service e specified opposite their names, are promoted to the grade of 2nd Class from that date :—

to d Class Hospital Assistant E. B. Govindarajulu Naidu, No. 1. } 12th July 1880.
Do do P. Etirajulu Naidu, No. 2.

MILITARY.

The 2nd July 1880.

No. 58.—Captain W. N. Carey, Adjutant, Bangalore Rifle Volunteers, is granted privilege leave of absence for sixty days, with effect from the 8th July 1880.

By Order,

W. J. CUNINGHAM,
Secretary.

REVENUE DEPARTMENT.

NOTIFICATIONS.

The 17th May 1880.

No. 12.—It is hereby notified that about 1,383 logs of teak and other timbers, the produce of the Nagar Division, will be sold by the Assistant Conservator in charge, by public auction, on the dates and at the places specified below :—

Names of Places of Sale.	Dates of Sale.	Teakwood.	Junglewood.	Teak Poles.	Junglewood Poles.
Lakvalli. ..	5th July 1880	180	580	..	..
Shimoga. ..	12th Do	..	365	233	25
	Total..	180	945	233	25

Terms of Sale.—As notified in the *Mysore Gazette*, Notification No. 20, dated 12th June 1873, and will be read out at the time of sale.

The 25th June 1880.

No. 32.—It is hereby notified for public information that all the rights of the present jodidars in the undermentioned jodi villages, which have been duly attached in satisfaction of the arrears of revenue due to Government (as shewn in the subjoined statement) by the said jodidars, will be sold by public auction at the offices and on the dates mentioned in the annexed statement. The sale will commence at 11 A. M. on the dates specified and the villages will be knocked down to the highest bidder without reserve.

2. Purchaser will be required to deposit 25 per cent of the purchase money at the time of sale, and where the remainder of the purchase money may not be paid within 15 days from the day of sale, the money so deposited shall be liable to forfeiture.

3. When such deposit shall not be made, nor the remaining purchase money paid up, the lands shall be resold at the expense and risk of the first purchaser.

4. Persons bidding at the sale may be required to state whether they bid on their own account or as agents, and in the latter case to deposit a written authority signed by their principals, otherwise their bids may be rejected.

5. The sale shall be stayed, if the defaulter, or any other person acting on his behalf or clai an interest in the land, tenders the full amount of the arrears of revenue with the interest and c charges, provided such tender be made before sunset on the day previous to that appointed for the

6. The sale of the property will not become absolute until the sale has been confirmed by Chief Commissioner.

7. Purchasers having completed the payment of the purchase money will, as soon as the has been confirmed by the Chief Commissioner, be placed in immediate possession, and the village be registered in the name of the purchaser, and a certificate of sale signed and sealed by the Dep Commissioner will be granted to him. It is to be distinctly understood that the Government are responsible for errors of description or in estimated extent.

8. Provided parties deeming themselves aggrieved by the sale shall be at liberty to appeal

District.	Taluk.	Hobli.	Village.	Names of Jodidars.	Boundaries of the Village.	Estimated Extent.	Estimated Gross Rental or Beriz.	Quit-Rent payable annually to Government.	Arrears of Government Revenue for which Village is to be sold.				Date of Sale.
									Years.	Amount.			
										Rs.	A.	P.	
Bangalore.	Nelamangala.	Sondekuppa.	Kanchipura.	Shamachar and 9 others.	Bounded on the north by Marla Banavadi, on the south Goranabele, on the east Kodappanahalli, on the west Yentaganahalli.	Acres. 1,008.	1,304—8—0.	534—8—10.	Dhatu ...	171	11	6	26th July 1880, at the Taluk Office.
									Iswara ...	191	12	7	
									Bahudhanya	287	5	11	
									Pramadi ...	233	6	8	
									Total...	884	4	8	
			Banasavadi.	Putta Narasimhaiya and 7 others.	Bounded on the north by Bolamaranahalli, on the south Narsingarayara Palya, on the east Sondekuppa, on the west Soladevanahalli.	A. 699.	414—0—0.	267—0—0.	Dhatu ...	54	8	8	27th July 1880, at the Taluk Office.
									Iswara ...	99	6	11	
									Bahudhanya.	40	9	11	
									Pramadi ...	80	0	8	
									Total	274	10	2	
Chitaldroog.	Chitaldroog.	Chitaldroog.	Agasankal.	Sridharachar and 9 others.	Bounded on the north by Cholagutta, on the south Shimoga road, on the east Madehalli, on the west Kavadigarahatti.	A. 294 C. 5	70—13—0	65—0—0		265	8	10	26th July 1880, at the Deputy Commissioner's Office at Chitaldroog before the Deputy Commissioner, or in his absence, before the Assistant Commissioner present.
			Kavadigarahatti.	Do	Bounded on the north by Kurubarahatti, on the south Jalikatte, on the east Cholagutta, on the west Nanjanhalli.	A. 688 C. 38	135—8—0	125—0—0		480	2	11	
			Huligundi.	Do	Bounded on the north by Kenchanakatte, on the south Chitaldroog, on the east Naralagundi, on the west Attikatte.	A. 249 C. 88	34—0—0	31—0—0		99	9	9	
			Kenchanakatte.	Do	Bounded on the north by Huligundi, on the south Agasanakal, on the east Naralagundi, on the west Kerabankal.	A. 173 C. 65	25—6—0	23—0—0		98	5	4	
			Cholagatta.	Do	Bounded on the north by Kavadigarahatti, on the south Agasanakal, on the east Marihalli, on the west Kavadigarahatti.	A. 193 C. 10	49—10—0	43—0—0	Attached in satisfaction of the arrears of the above 4 villages.				
			Lingadahalli.	Haliyachar.	Bounded on the north by Niratadi, on the south Kenchamaranahalli, on east Obalapura, on the west Pudakalhalli.	A. 294 C. 32	60—0—0	23—0—0		26	12	0	

The 28th June 1880.

No. 33.—Krishnaiengar, Amildar of the Chitaldroog Taluk, is granted privilege leave for four weeks from such date as he may avail himself of the same.

The 1st July 1880.

No. 34.—M. Govindarajulu Naidu is granted leave on medical certificate till the end of September 1880, in extension of that sanctioned in Notification No. 72 of the 17th March 1880.

This cancels that part of the Notification No. 27 of the 22nd June 1880, which relates to the temporary appointment of Govindarajulu Naidu to the Devanhalli Taluk.

By Order,

C. RANGACHARLU,
Revenue Secretary.

Notification, &c., by the Government of India.

PUBLIC WORKS DEPARTMENT.

NOTIFICATION.

Simla, the 24th June 1880.

No. 203.—The Governor General in Council is pleased to make the following promotions in the Engineer Establishment attached to Local Administrations with effect from the 1st June 1880 :—

I.—PERMANENT.

From 2nd to 1st Grade Executive Engineer.

* * * * *

Stoddard, A. .. .. .. Mysore.

* * * * *

From 4th to 3rd Grade Executive Engineer.

* * * * *

Gramatzki, E. .. .. .. Mysore.

* * * * *

Bayly, G. H. .. .. .. Mysore.
Groves, H. .. .. .. Mysore.

* * * * *

ALEX. FRASER, *Major-Genl.*,
Secy. to the Govt. of India.

List of Papers placed at the disposal of the Press.

No.	No. of Letters.	Date.	Subject.
1	1846—511.	12th June 1880 ...	Reviewing the Annual Report on the working of the Indian Companies Act during 1879—80.
2	1927—33.	19th do ...	Regarding the Seringapatam and Ganjam Police.
3	1996—550.	22nd do ...	Communicating India's sanction to the entertainment of an establishment for the Bangalore Lying-in-Hospital.
4	2102—39.	24th do ...	Reviewing the Report on the Administration of Criminal Justice Mysore for the year 1879.

THE

MYSORE GAZETTE.

No. 27 Published by Authority. of 1880.

BANGALORE, SATURDAY, JULY 10, 1880.

☞ Separate paging is given to this Part in order that it may be filed as a separate compilation.

CONTENTS.

	PAGE.
PART I.—Notifications by the Chief Commissioner of Mysore and Coorg.—Notifications by the Government of India...	175—180
PART II.—Notifications, &c., by the Judicial Commissioner; Survey and Settlement Commissioner; Superintendent of Inam Settlements; Deputy Accountant General; Public Works Officers; Military Assistant; Inspector General of Registration; Director of Public Instruction; Deputy Surgeon General of Hospitals; Anche Bakshi; President of the Municipal Boards; District and Sessions Judges; Deputy Commissioners of Districts.—Season Reports; Meteorological Registers; Postal Notices, &c.	379—384
PART III.—Acts of the Governor General of India in Council, &c.	Nil.
PART IV.—Miscellaneous Papers	Nil.
SUPPLEMENT.—Abstract of Season or Intermediate Reports.	

PART I.

Notifications by the Chief Commissioner of Mysore.

GENERAL DEPARTMENT.

NOTIFICATION.

The 7th July 1880.

No. 59.—Mr. P. N. Krishna Múrti, B. L., Deputy Commissioner, Kadur District, is granted privilege leave of absence for three months, under Section 44 of the Civil Leave Code, with effect from the 9th instant, or from such date as he may avail himself of it.

By Order,

W. J. CUNINGHAM,
Secretary.

REVENUE DEPARTMENT.

NOTIFICATIONS.

The 17th May 1880.

No. 12.—It is hereby notified that about 1,383 logs of teak and other timbers, the produce of the Nagar Division, will be sold by the Assistant Conservator in charge, by public auction, on the dates and at the places specified below :—

Names of Places of Sale.	Dates of Sale.	Teakwood.	Junglewood.	Teak Poles.	Junglewood Poles.
*	*	*	*	*	*
Shimoga. ..	12th July 1880.	..	365	233	25

Terms of Sale.—As notified in the *Mysore Gazette*, Notification No. 20, dated 12th June 1873, and will be read out at the time of sale.

The 25th June 1880.

No. 32.—It is hereby notified for public information that all the rights of the present jodidars in the undermentioned jodi villages, which have been duly attached in satisfaction of the arrears of revenue due to Government (as shewn in the subjoined statement) by the said jodidars, will be sold by public auction at the offices and on the dates mentioned in the annexed statement. The sale will commence at 11 A. M. on the dates specified and the villages will be knocked down to the highest bidder without reserve.

2. Purchaser will be required to deposit 25 per cent of the purchase money at the time of sale, and where the remainder of the purchase money may not be paid within 15 days from the day of sale, the money so deposited shall be liable to forfeiture.

3. When such deposit shall not be made, nor the remaining purchase money paid up, the lands shall be resold at the expense and risk of the first purchaser.

4. Persons bidding at the sale may be required to state whether they bid on their own account or as agents, and in the latter case to deposit a written authority signed by their principals, otherwise their bids may be rejected.

5. The sale shall be stayed, if the defaulter, or any other person acting on his behalf or claiming an interest in the land, tenders the full amount of the arrears of revenue with the interest and other charges, provided such tender be made before sunset on the day previous to that appointed for the sale.

6. The sale of the property will not become absolute until the sale has been confirmed by the Chief Commissioner.

7. Purchasers having completed the payment of the purchase money will, as soon as the sale has been confirmed by the Chief Commissioner, be placed in immediate possession, and the village will be registered in the name of the purchaser, and a certificate of sale signed and sealed by the Deputy Commissioner will be granted to him. It is to be distinctly understood that the Government are not responsible for errors of description or in estimated extent.

8. Provided parties deeming themselves aggrieved by the sale shall be at liberty to appeal to the Chief Commissioner within 30 days from the day of sale, and the purchase shall be conditional on the final order in such appeal.

District.	Taluk.	Hobli.	Village.	Names of Jodidars.	Boundaries of the Village.	Estimated Extent.	Estimated Gross Rental or Beriz.	Quit-Rent payable annually to Government.	Arrears of Government Revenue for which Village is to be sold. Years.	Amount. Rs.	A.	P.	Date of Sale.
Bangalore.	Nelamangala.	Sondekuppa.	Kanchipura.	Shamachar and 9 others.	Bounded on the north by Marla Banavadi, on the south Goranabele, on the east Kodappanahalli, on the west Yentaganahalli.	Acres. 1,008.	1,304—8—0.	534—8—10.	Dhatu ...	171	11	6	26th July 1880, at the Taluk Office.
									Iswara ...	191	12	7	
									Bahudhanya	287	5	11	
									Pramadi ...	233	6	8	
									Total...	884	4	8	
			Banasavadi.	Putta Narasimhaiya and 7 others.	Bounded on the north by Bolamaranahalli, on the south Narsingarayara Palya, on the east Sondekuppa, on the west Soladevanahalli.	A. 699.	414—0—0.	267—0—0.	Dhatu ...	54	8	8	27th July 1880, at the Taluk Office.
									Iswara ...	99	6	11	
									Bahudhanya.	40	9	11	
									Pramadi ...	80	0	8	
									Total	274	10	2	
Chitaldroog.	Chitaldroog.	Chitaldroog.	Agasankal.	Sridharachar and 9 others.	Bounded on the north by Cholagutta, on the south Shimoga road, on the east Madehalli, on the west Kavadigarahatti.	A. 294 C. 5	70—13—0	65—0—0		265	8	10	26th July 1880, before the Deputy Commissioner, or, in his absence, before the Assistant Commissioner present.
			Kavadigarahatti.	Do	Bounded on the north by Kurubarahatti, on the south Jalikatte, on the east Cholagutta, on the west Nanjanhalli.	A. 688 C. 38	135—8—0	125—0—0		480	2	11	
			Huligundi.	Do	Bounded on the north by Kenchanakatte, on the south Chitaldroog, on the east Naralagundi, on the west Attikatte.	A. 249 C. 88	34—0—0	31—0—0		99	9	9	
			Kenchanakatte.	Do	Bounded on the north by Huligundi, on the south Agasanakal, on the east Naralagundi, on the west Kerabankal.	A. 173 C. 65	25—6—0	23—0—0		98	5	4	
			Cholagatta.	Do	Bounded on the north by Kavadigarahatti, on the south Agasanakal, on the east Marihalli, on the west Kavadigarahatti.	A. 193 C. 10	49—10—0	43—0—0	Attached in satisfaction of the arrears of the above 4 villages.				
		Bhimasamudra.	Lingadahalli.	Haliyachar.	Bounded on the north by Niratadi, on the south Kenchamaranahalli, on the east Obalapura, on the west Pudakalhalli.	A. 294 C. 32	60—0—0	23—0—0		26	12	0	

The 1st July 1880.

No. 35.—It is hereby notified for public information that all the rights of the present jodidars in the undermentioned jodi villages, which have been duly attached in satisfaction of the arrears of revenue due to Government (as shewn in the subjoined statement), by the said jodidars, will be sold by public auction at the Deputy Commissioner's Office at Chitaldroog on Monday the 2nd of August 1880, before the Deputy Commissioner of Chitaldroog, or, in his absence, before the Assistant Commissioner present. The sale will commence at 11 A. M. on that date and the villages will be knocked down to the highest bidder without reserve.

2. Purchaser will be required to deposit 25 per cent of the purchase money at the time of sale, and where the remainder of the purchase money may not be paid within 15 days from the day of sale, the money so deposited shall be liable to forfeiture.

3. When such deposit shall not be made nor the remaining purchase money paid up, the lands shall be resold at the expense and risk of the first purchaser.

4. Persons bidding at the sale may be required to state whether they bid on their own account or as agents, and in the latter case to deposit a written authority signed by their principals, otherwise their bids may be rejected.

5. The sale shall be stayed, if the defaulter or any other person acting in his behalf, or claiming an interest in the land, tenders the full amount of the arrears of revenue with the interest and other charges, provided such tender be made before sunset on the day previous to that appointed for the sale.

6. The sale of the property will not become absolute until the sale has been confirmed by the Chief Commissioner.

7. Purchasers having completed the payment of the purchase money will, as soon as the sale has been confirmed by the Chief Commissioner, be placed in immediate possession and the village will be registered in the name of the purchaser, and a certificate of sale signed and sealed by the Deputy Commissioner will be granted to him. It is to be distinctly understood that the Government are not responsible for errors of description or in estimated extent.

8. Provided parties deeming themselves aggrieved by the sale shall be at liberty to appeal to the Chief Commissioner within thirty days from the day of sale, and the purchase shall be conditional on the final order in such appeal.

Taluk.	Village.	Names of Jodidars.	Boundaries of the Village.	Estimated Extent.	Estimated Gross Rental or Beriz.	Quit-Rent payable annually to Government.	Arrears of Government Revenue including Local Cess for which Village is to be sold.			
							Years.	Amount.		
Pavagada.	Jajurayanhalli.	Kristnachari and 3 others.	Bounded on the north by Sankaralkunte, on the south Venkatapur, on the east Doddagutte village of the Penakonda Taluk, Bellary Zillah, on the west Hoskote.	A. 2,610 G. 30.	716—8—0.	109—0—0.	1877—78...	35	12	0
							1878—79..	74	3	4
							1879—80...	99	3	5
							Total...	209	2	9
Do	Atchammanahalli.	Tirumal Rao...	Bounded on the north by Hoskote, on the south Tippaganhalli, on the east Hosdurga, on the west Kaligolima in Her Majesty's Territories.	K. 50 C. 17. P. 5	429—4—5.	429—4—5.	1878—79...	185	15	1
							1879—80...	480	8	1
							Total... ...	666	7	2

The 2nd July 1880.

No. 36.—It is hereby notified for public information that all the rights of the present jodidars in the undermentioned jodi village which has been duly attached in satisfaction of the arrears of revenue due to Government (as shewn in the subjoined statement) by the said jodidars, will be sold by public auction at the Taluk office at Nelamangala on the 2nd of August 1880. The sale will commence at 11 A. M. on that date and the village will be knocked down to the highest bidder without reserve.

2. Purchaser will be required to deposit 25 per cent of the purchase money at the time of sale, and where the remainder of the purchase money may not be paid within 15 days from the day of sale, the money so deposited shall be liable to forfeiture.

3. When such deposit shall not be made, nor the remaining purchase money paid up, the lands shall be resold at the expense and risk of the first purchaser.

4. Persons bidding at the sale may be required to state whether they bid on their own account or as agents, and in the latter case to deposit a written authority signed by their principals, otherwise their bids may be rejected.

5. The sale shall be stayed, if the defaulter, or any other person acting on his behalf or claiming an interest in the land, tenders the full amount of the arrears of revenue with the interest and other charges, provided such tenders be made before sunset on the day previous to that appointed for the sale.

6. The sale of the property will not become absolute until the sale has been confirmed by the Chief Commissioner.

7. Purchasers having completed the payment of the purchase money will, as soon as the sale has been confirmed by the Chief Commissioner, be placed in immediate possession, and the village will be registered in the name of the purchaser, and a certificate of sale signed and sealed by the Deputy Commissioner will be granted to him. It is to be distinctly understood that the Government are not responsible for errors of description or in estimated extent.

8. Provided parties deeming themselves aggrieved by the sale shall be at liberty to appeal to the Chief Commissioner within 30 days from the day of sale, and the purchase shall be conditional on the final order in such appeal.

Taluk.	Hobli.	Village.	Names of Jodidars.	Boundaries of the Village.	Extent.	Beriz.	Quit-Rent payable annually to Government.	Arrears of Government Revenue for which Village is to be sold.			
								Years.	Amount.		
Nelamangala.	Begur.	Arakasandra.	1st Madhavachar 2nd Praneshachar 3rd Jayachar.	Bounded on the north by Bedarahalli, on the south Madalkote, on the east Araledibba and Kempahalli, on the west Timmasandra Palya.	A. 405—G. 38.	653—12—0.	204—15—4.	Dhatu ...	183	11	10
								Iswara ...	159	11	10
								Bahudhanya	190	7	7
								Total.....	533	15	3

By Order,

C. RANGACHARLU,
Revenue Secretary.

PUBLIC WORKS DEPARTMENT.

NOTIFICATIONS.

The 2nd July 1880.

No. 16.—Mr. F. Sharp, Assistant Engineer, 1st grade, Mysore Division, is granted 3 months' privilege leave under Section 44 of the Civil Leave Code, with effect from 15th instant.

The 5th July 1880.

No. 17.—Syed Yusuf Sahib, Assistant Engineer, 2nd grade, is appointed to officiate as Executive Engineer on the Local Public Works Establishment while in charge of the Chitaldroog Division, of which he assumed charge from Mr. Winckler on the afternoon of the 30th June 1880.

The 7th July 1880.

No. 18.—Mr. A. Stoddard handed over, and Mr. F. J. McLaughlin received, charge of the Shimoga Division, on the afternoon of the 29th June 1880.

The 9th July 1880.

No. 19.—Mr. A. Stoddard, Executive Engineer, 1st grade, is granted two years' furlough, out of India, under Chapter IV, Section 21 of the Civil Leave Code.

2. This cancels the leave granted in Public Works Notification No. 11, dated 25th May 1880.

By Order,

W. R. JOHNSON, *Lieut.-Col.*,
Secretary, P. W. D.

Notifications by the Chief Commissioner of Coorg.

GENERAL.

NOTIFICATION.

The 8th July 1880.

No. 9.—Mr. F. B. Dickinson, Assistant Conservator of Forests, Coorg, has passed the Higher Standard Examination in Kanarese, as laid down in G. G. O. No. 734 of 9th September 1864.

By Order,

W. J. CUNINGHAM,
Secretary.

Notifications, &c., by the Government of India.

PUBLIC WORKS DEPARTMENT.

NOTIFICATION.

Simla, the 28th June 1880.

No. 210.—Messrs. G. W. Winckler and A. R. Lilley, Assistant Engineers, 1st grade, are transferred from Mysore to Assam.

ALEX. FRASER, *Major-Genl., R. E.*,
Secy. to the Govt. of India.

THE

MYSORE GAZETTE.

No. 28 Published by Authority. of 1880.

BANGALORE, SATURDAY, JULY 17, 1880.

☞ Separate paging is given to this Part in order that it may be filed as a separate compilation.

CONTENTS.

	PAGE.
PART I.—Notifications by the Chief Commissioner of Mysore and Coorg.—Notifications by the Government of India...	181—187
PART II.—Notifications, &c., by the Judicial Commissioner; Survey and Settlement Commissioner; Superintendent of Inam Settlements; Deputy Accountant General; Public Works Officers; Military Assistant; Inspector General of Registration; Director of Public Instruction; Deputy Surgeon General of Hospitals; Anche Bakshi; President of the Municipal Boards; District and Sessions Judges; Deputy Commissioners of Districts.—Season Reports; Meteorological Registers; Postal Notices, &c.	385—393
PART III.—Acts of the Governor General of India in Council, &c.	Nil.
PART IV.—Miscellaneous Papers	Nil.
SUPPLEMENT.—Abstract of Season or Intermediate Reports, &c...	1—2

PART I.

Notifications by the Chief Commissioner of Mysore.

GENERAL DEPARTMENT.

NOTIFICATIONS.

The 12th July 1880.

No. 60.—Surgeon-Major T. J. McGann, Civil Surgeon, Mysore, returned to duty from the privilege leave of two months and twenty four days granted in Chief Commissioner's Notification No. 7, dated 6th April last, on the forenoon of the 12th instant.

No. 61.—Mr. P. N. Krishna Múrti, B. L., delivered over, and Colonel W. Hill received, charge of the Hassan District and Treasury, on the afternoon of the 10th July 1880.

The 13th July 1880.

No. 62.—Mr. C. Madaiya, Assistant Commissioner, Hassan District, is granted privilege leave for three months, under Section 44 of the Civil Leave Code, with effect from the 15th instant, or from such date as he may avail himself of it.

Mr. V. P. Madhava Rao, B. A., Subordinate Judge, will remain in charge of the Hassan District Treasury during the absence of Mr. Madaiya on leave, or until further orders.

No. 63.—Mr. E. Hewetson, District Superintendent of Police, Town and Cantonment of Bangalore, returned from the privilege leave granted to him in Notification No. 2, dated 3rd April 1880, and received charge of his office from Mr. S. H. Vardon on the afternoon of the 10th instant.

No. 64.—The undermentioned individuals have obtained certificates of qualification from the Medical College, Madras, as Hospital Assistants, and are to be considered as promoted to that grade from the 30th June 1880. The names are arranged in order of merit:—

M. R. Srinivasalu Naidu	No.	37	J. Samuel	No.	41	Equal.
Abdul Wahab	"	38	A. P. Muttusami Pille	"	42	
G. B. Chinnasami	"	39	M. Ephraim	"	43	
A. Rajagopal Nayaker	"	40	V. S. Balasundram	"	44	

The 14th July 1880.

No. 65.—The following appointment is ordered, consequent on the promotion of Mr. T. Raghavendra Rao from the 2nd Grade of Munsiffs to the grade of Revenue Assistant Commissioners, published in Notification No. 43, dated 25th May 1880.

Narasimmaiengar, Acting Munsiff of Sagar, to be a Munsiff of the 3rd Grade, subject to his passing the prescribed examination, with effect from the 15th May 1880.

The 16th July 1880.

No. 66.—Colonel W. Hill, delivered over, and Colonel A. C. Hay received, charge of the District and Sessions Court, Ashtagram Division, on the afternoon of the 9th July 1880.

No. 67.—Mr. J. P. Garrett, Superintendent, Mysore Government Press, is granted privilege leave of absence for three months under Section 44 of the Civil Leave Code, from such date as he may avail himself of it.

By Order,
W. J. CUNINGHAM,
Secretary.

REVENUE DEPARTMENT.

NOTIFICATIONS.

The 25th June 1880.

No. 32.—It is hereby notified for public information that all the rights of the present jodidars in the undermentioned jodi villages, which have been duly attached in satisfaction of the arrears of revenue due to Government (as shewn in the subjoined statement), by the said jodidars, will be sold by public auction at the offices and on the dates mentioned in the annexed statement. The sale will commence at 11 A. M. on the dates specified and the villages will be knocked down to the highest bidder without reserve.

2. Purchaser will be required to deposit 25 per cent of the purchase money at the time of sale, and where the remainder of the purchase money may not be paid within 15 days from the day of sale, the money so deposited shall be liable to forfeiture.

3. When such deposit shall not be made, nor the remaining purchase money paid up, the lands shall be resold at the expense and risk of the first purchaser.

4. Persons bidding at the sale may be required to state whether they bid on their own account or as agents, and in the latter case to deposit a written authority signed by their principals, otherwise their bids may be rejected.

5. The sale shall be stayed, if the defaulter or any other person acting on his behalf or claiming an interest in the land, tenders the full amount of the arrears of revenue with the interest and other charges, provided such tender be made before sunset on the day previous to that appointed for the sale.

6. The sale of the property will not become absolute until the sale has been confirmed by the Chief Commissioner.

7. Purchasers having completed the payment of the purchase money will, as soon as the sale has been confirmed by the Chief Commissioner, be placed in immediate possession, and the village will be registered in the name of the purchaser, and a certificate of sale signed and sealed by the Deputy Commissioner will be granted to him. It is to be distinctly understood that the Government are not responsible for errors of description or in estimated extent.

8. Provided parties deeming themselves aggrieved by the sale shall be at liberty to appeal to the Chief Commissioner within 30 days from the day of sale, and the purchase shall be conditional on the final order in such appeal.

District.	Taluk.	Hobli.	Village.	Names of Jodidars.	Boundaries of the Village.	Estimated Extent.	Estimated Gross Rental or Beriz.	Quit-Rent payable annually to Government.	Arrears of Government Revenue for which Village is to be sold. Years.	Amount. Rs.	A.	P.	Date of Sale.
Bangalore.	Nelamangala.	Sondekuppa.	Kanchipura.	Shamachar and 9 others.	Bounded on the north by Marla Banavadi, on the south Goranabele, on the east Kodappanahalli, on the west Yentaganahalli.	Acres. 1,008.	1,304—8—0.	534—8—10.	Dhatu ...	171	11	6	26th July 1880, at the Taluk Office.
									Iswara ...	191	12	7	
									Bahudhanya	287	5	11	
									Pramadi ...	233	6	8	
									Total..	884	4	8	
			Banasavadi.	Putta Narasimhaiya and 7 others.	Bounded on the north by Bolamaranahalli, on the south Narsingarayara Palya, on the east Sondekuppa, on the west Soladevanahalli.	A. 699.	414—0—0.	267—0—0,	Dhatu ...	54	8	8	27th July 1880, at the Taluk Office.
									Iswara ...	99	6	11	
									Bahudhanya.	40	9	11	
									Pramadi ...	80	0	8	
									Total	274	10	2	
Chitaldroog.	Chitaldroog.	Chitaldroog.	Agasankal.	Sridharachar and 9 others.	Bounded on the north by Cholagutta, on the south Shimoga road, on the east Madehalli, on the west Kavadigarahatti.	A. 294 C. 5	70—13—0	65—0—0		265	8	10	26th July 1880, at the Deputy Commissioner's Office at Chitaldroog, before the Deputy Commissioner, or, in his absence, before the Assistant Commissioner present.
			Kavadigarahatti.	Do	Bounded on the north by Kurubarahatti, on the south Jalikatte, on the east Cholagutta, on the west Nanjanhalli.	A. 688 C. 38	135—8—0	125—0—0		480	2	11	
			Huligundi.	Do	Bounded on the north by Kenchanakatte, on the south Chitaldroog, on the east Naralagundi, on the west Attikatte.	A. 249 C. 88	24—0—0	31—0—0		99	9	9	
			Kenchanakatte.	Do	Bounded on the north by Huligundi, on the south Agasanakal, on the east Naralagundi, on the west Kerabankal.	A. 173 C. 65	25—6—0	23—0—0		98	5	4	
			Cholagatta.	Do	Bounded on the north by Kavadigarahatti, on the south Agasanakal, on the east Marihalli, on the west Kavadigarahatti.	A. 193 C. 10	49—10—0	43—0—0	Attached in satisfaction of the arrears of the above 4 villages.				
		Bhimasamudra.	Lingadahalli.	Haliyachar.	Bounded on the north by Niratadi, on the south Kenchamaranahalli, on the east Obalapura, on the west Pudakalhalli.	A. 294 C. 32	60—0—0	23—0—0		26	12	0	

The 1st July 1880.

No. 35.—It is hereby notified for public information that all the rights of the present jodidars in the undermentioned jodi villages, which have been duly attached in satisfaction of the arrears of revenue due to Government (as shewn in the subjoined statement), by the said jodidars, will be sold by public auction at the Deputy Commissioner's Office at Chitaldroog on Monday the 2nd of August 1880, before the Deputy Commissioner of Chitaldroog, or, in his absence, before the Assistant Commissioner present. The sale will commence at 11 A. M. on that date and the villages will be knocked down to the highest bidder without reserve.

2. Purchaser will be required to deposit 25 per cent of the purchase money at the time of sale, and where the remainder of the purchase money may not be paid within 15 days from the day of sale, the money so deposited shall be liable to forfeiture.

3. When such deposit shall not be made nor the remaining purchase money paid up, the lands shall be resold at the expense and risk of the first purchaser.

4. Persons bidding at the sale may be required to state whether they bid on their own account or as agents, and in the latter case to deposit a written authority signed by their principals, otherwise their bids may be rejected.

5. The sale shall be stayed, if the defaulter or any other person acting in his behalf, or claiming an interest in the land, tenders the full amount of the arrears of revenue with the interest and other charges, provided such tender be made before sunset on the day previous to that appointed for the sale.

6. The sale of the property will not become absolute until the sale has been confirmed by the Chief Commissioner.

7. Purchasers having completed the payment of the purchase money will, as soon as the sale has been confirmed by the Chief Commissioner, be placed in immediate possession and the village will be registered in the name of the purchaser, and a certificate of sale signed and sealed by the Deputy Commissioner will be granted to him. It is to be distinctly understood that the Government are not responsible for errors of description or in estimated extent.

8. Provided parties deeming themselves aggrieved by the sale shall be at liberty to appeal to the Chief Commissioner within thirty days from the day of sale, and the purchase shall be conditional on the final order in such appeal.

Taluk.	Village.	Names of Jodidars.	Boundaries of the Village.	Estimated Extent.	Estimated Gross Rental or Beriz.	Quit-Rent payable annually to Government.	Arrears of Government Revenue including Local Cess for which Village is to be sold.			
							Years.	Amount.		
Pavagada.	Jajurayanhalli.	Kristnachari and 3 others.	Bounded on the north by Sankaralkunte, on the south Venkatapur, on the east Doddagutte village of the Pnakonda Taluk, Bellary Zillah, on the west Hoskote.	A. 2,610 G. 30.	716—8—0.	109—0—0.	1877—78...	35	12	0
							1878—79...	74	3	4
							1879—80...	99	3	5
							Total...	209	2	9
Do	Atchammanahalli.	Tirumal Rao...	Bounded on the north by Hoskote, on the south Tippaganhalli, on the east Hosdurga, on the west Kaligolima in Her Majesty's Territories.	K. 50 C. 17. P. 5	429—4—5.	429—4—5.	1878—79...	185	15	1
							1879—80...	480	8	1
							Total.. ...	666	7	2

The 2nd July 1880.

No. 36.—It is hereby notified for public information that all the rights of the present jodidars in the undermentioned jodi village which has been duly attached in satisfaction of the arrears of revenue due to Government (as shewn in the subjoined statement) by the said jodidars, will be sold by public auction at the Taluk office at Nelamangala on the 2nd of August 1880. The sale will commence at 11 A. M. on that date and the village will be knocked down to the highest bidder without reserve.

2. Purchaser will be required to deposit 25 per cent of the purchase money at the time of sale, and where the remainder of the purchase money may not be paid within 15 days from the day of sale, the money so deposited shall be liable to forfeiture.

3. When such deposit shall not be made, nor the remaining purchase money paid up, the lands shall be resold at the expense and risk of the first purchaser.

4. Persons bidding at the sale may be required to state whether they bid on their own account or as agents, and in the latter case to deposit a written authority signed by their principals, otherwise their bids may be rejected.

5. The sale shall be stayed, if the defaulter, or any other person acting on his behalf or claiming an interest in the land, tenders the full amount of the arrears of revenue with the interest and other charges, provided such tenders be made before sunset on the day previous to that appointed for the sale.

6. The sale of the property will not become absolute until the sale has been confirmed by the Chief Commissioner.

7. Purchasers having completed the payment of the purchase money will, as soon as the sale has been confirmed by the Chief Commissioner, be placed in immediate possession, and the village will be registered in the name of the purchaser, and a certificate of sale signed and sealed by the Deputy Commissioner will be granted to him. It is to be distinctly understood that the Government are not responsible for errors of description or in estimated extent.

8. Provided parties deeming themselves aggrieved by the sale shall be at liberty to appeal to the Chief Commissioner within 30 days from the day of sale, and the purchase shall be conditional on the final order in such appeal.

Taluk.	Hobli.	Village.	Names of Jodidars.	Boundaries of the Village.	Extent.	Beriz.	Quit-Rent payable annually to Government.	Arrears of Government Revenue for which Village is to be sold.			
								Years.	Amount.		
Nelamangala.	Begur.	Aralasandra.	1st Madhavachar 2nd Pranesha-char 3rd Jayachar.	Bounded on the north by Bedarahalli, on the south Madalkote, on the east Araledibba and Kempahalli, on the west Timmasandra Palya.	A. 405—G. 38.	653—12—0.	204—15—4.	Dhatu ...	183	11	10
								Iswara	159	11	10
								Pahudhanya.	190	7	7
								Total.....	533	15	3

B

The 10th July 1880.

No. 37.—It is hereby declared under Sections 4 and 6 of the Land Acquisition Act X of 1870, that the land hereunder specified is required for public purposes, *viz.*, Palace use :—

Situation.—Within Municipal limits of Mysore City.

Approximate area.—About 20 acres.

Boundaries.—

East.—Karanji tank bund.

South.—Sannu Rao's garden and a lane running from there to the road between Ittigegudu and old Race Course.

North.—Summer Palace, Maha Raja's stables and grounds attached thereto.

West.—Road from Ittigegudu to the old Race Course aforesaid.

The 14th July 1880.

No. 38.—Abdul Aziz, Amildar of the Anekal Taluk, is granted privilege leave of absence for 15 days from such date as he may avail himself of the same.

By Order,

C. RANGACHARLU,
Revenue Secretary.

PUBLIC WORKS DEPARTMENT.

NOTIFICATION.

The 9th July 1880.

No. 20.—Mr. T. Inman, Assistant Engineer, Shimoga Division, is granted three months' language leave under Chapter II, Section 11, Para 27 of the Public Works Code, with effect from the 1st instant.

By Order,

W. R. JOHNSON, *Lieut.-Col.,*
Secretary, P. W. D.

Notifications by the Chief Commissioner of Coorg.

GENERAL.

NOTIFICATION.

The 15th July 1880.

No. 10.—Mr. F. B. Dickinson, Assistant Conservator of Forests, Coorg, officiating in the 1st Grade, is confirmed in that grade from the 5th July 1880, the date of his passing the Higher Standard Examination in Kanarese, under the provision contained in para IV of Circular Resolution of the Home, Revenue and Agricultural Department No. 5 F, dated 23rd February 1880.

By Order,

W. J. CUNINGHAM,
Secretary.

Notifications, &c., by the Government of India.

PUBLIC WORKS DEPARTMENT.

NOTIFICATION.

Simla, the 9th July 1880.

No. 228.—The Governor General in Council is pleased to make the following promotions in the Superior Accounts Establishment, with effect from 1st July 1880 :—

I.—PERMANENT.

* * * * * *

From Deputy Examiner, 1st *Grade, to Examiner*, 4th *Class*, 3rd *Grade.*

* * * * *

Mr. A. R. Becher.

* * * * *

ALEX. FRASER, *Major-Genl., R. E.,*
Secy. to the Govt. of India.

THE

MYSORE GAZETTE.

No. 29 Published by Authority. of 1880.

BANGALORE, SATURDAY, JULY 24, 1880.

☞ Separate paging is given to this Part in order that it may be filed as a separate compilation.

CONTENTS.

	PAGE.
PART I.—Notifications by the Chief Commissioner of Mysore and Coorg.—Notifications by the Government of India...	189—192
PART II.—Notifications, &c., by the Judicial Commissioner; Survey and Settlement Commissioner; Superintendent of Inam Settlements; Deputy Accountant General; Public Works Officers; Military Assistant; Inspector General of Registration; Director of Public Instruction; Deputy Surgeon General of Hospitals; Anche Bakshi; President of the Municipal Boards; District and Sessions Judges; Deputy Commissioners of Districts.—Season Reports; Meteorological Registers; Postal Notices, &c.....	395—404
PART III.—Acts of the Governor General of India in Council, &c.	Nil.
PART IV.—Miscellaneous Papers.....	Nil.
SUPPLEMENT.—Abstract of Season or Intermediate Reports, &c...	1

PART I.

Notifications by the Chief Commissioner of Mysore.

GENERAL DEPARTMENT.

NOTIFICATIONS.

The 17th July 1880.

No. 68.—Surgeon P. H. Benson, M. B., delivered over, and Surgeon-Major T. J. McGann received, charge of the offices of Civil Surgeon, Mysore, Superintendent, Mysore and Kukarhalli Jails, and Chemical Examiner to Government, on the forenoon of the 14th July 1880.

The 20th July 1880.

No. 69.—The undermentioned Medical students having failed to pass for the grade of Hospital Assistant, are discharged from the 1st July 1880:—

P. R. Sampangi Nayakar. | F. A. Jayacilaroy.

No. 70.—The undermentioned individual has obtained a certificate of qualification from the Medical College, Madras, as Hospital Assistant, and is to be considered as promoted to that grade from the 30th June 1880:—

M. Perumal Naidu, No. 45.

The 22nd July 1880.

No. 71.—Under the provisions of Rule 8 of the Notification of the Government of India, No. 235 I. J., dated 27th August 1879, the Chief Commissioner is pleased to invest S. Venkat Vardaiengar, Munsiff of Closepet, with the jurisdiction of a Judge of a Court of Small Causes for the trial of suits cognizable by such Courts up to the amount of Rs. 50 within the local limits of the Town of Closepet.

The 23rd July 1880.

No. 72.—The following appointment is ordered :—

S. Varadarajaiengar, Civil Clerk, Judicial Commissioner's Court, now acting as Munsiff of Turuvekere, to be a Munsiff of the 3rd Grade, *vice* C. Seshaiengar, Munsiff of Húnsúr, deceased.

No. 73.—Mr. Dalvoy Devaraj Ars, Attaché, is granted privilege leave of absence for 15 days, under Section 44 of the Civil Leave Code, from such date as he may avail himself of it.

No. 74.—Mr. N. Venkat Rao, Attaché, Túmkúr District, is granted leave on medical certificate for one month, under Section 4, Supplement F, of the Civil Leave Code, with effect from the 21st July 1880.

Mr. E. Chitambaram Iyer, Subordinate Judge, will receive charge of the Túmkúr Treasury and Jail from Mr. Venkat Rao, and remain in charge of them until further orders.

By Order,
W. J. CUNINGHAM,
Secretary.

REVENUE DEPARTMENT.

NOTIFICATIONS.

The 1st July 1880.

No. 35.—It is hereby notified for public information that all the rights of the present jodidars in the undermentioned jodi villages, which have been duly attached in satisfaction of the arrears of revenue due to Government (as shewn in the subjoined statement), by the said jodidars, will be sold by public auction at the Deputy Commissioner's Office at Chitaldroog on Monday the 2nd of August 1880, before the Deputy Commissioner of Chitaldroog, or, in his absence, before the Assistant Commissioner present. The sale will commence at 11 A. M. on that date and the villages will be knocked down to the highest bidder without reserve.

2. Purchaser will be required to deposit 25 per cent of the purchase money at the time of sale, and where the remainder of the purchase money may not be paid within 15 days from the day of sale, the money so deposited shall be liable to forfeiture.

3. When such deposit shall not be made nor the remaining purchase money paid up, the lands shall be resold at the expense and risk of the first purchaser.

4. Persons bidding at the sale may be required to state whether they bid on their own account or as agents, and in the latter case to deposit a written authority signed by their principals, otherwise their bids may be rejected.

5. The sale shall be stayed, if the defaulter or any other person acting in his behalf, or claiming an interest in the land, tenders the full amount of the arrears of revenue with the interest and other charges, provided such tender be made before sunset on the day previous to that appointed for the sale.

6. The sale of the property will not become absolute until the sale has been confirmed by the Chief Commissioner.

7. Purchasers having completed the payment of the purchase money will, as soon as the sale has been confirmed by the Chief Commissioner, be placed in immediate possession and the village will be registered in the name of the purchaser, and a certificate of sale signed and sealed by the Deputy Commissioner will be granted to him. It is to be distinctly understood that the Government are not responsible for errors of description or in estimated extent.

8. Provided parties deeming themselves aggrieved by the sale shall be at liberty to appeal to the Chief Commissioner within thirty days from the day of sale, and the purchase shall be conditional on the final order in such appeal.

Taluk.	Village.	Names of Jodidars.	Boundaries of the Village.	Estimated Extent.	Estimated Gross Rental or Beriz.	Quit-Rent payable annually to Government.	Arrears of Government Revenue including Local Cess for which Village is to be sold.			
							Years.	Amount.		
Pavagada.	Jajurayanhalli.	Kristnachari and 3 others.	Bounded on the north by Sankaralkunte, on the south Venkatapur, on the east Doddagutte village of the Penakonda Taluk, Bellary Zillah, on the west Hoskote.	A. 2,610 G. 30.	716—8—0.	109—0—0.	1877—78...	35	12	0
							1878—79...	74	3	4
							1879—80...	99	3	5
							Total...	209	2	9
Do	Atchammanahalli.	Tirumal Rao...	Bounded on the north by Hoskote, on the south Tippaganhalli, on the east Hosdurga, on the west Kaligolima in Her Majesty's Territories.	K. 50 C. 17. P. 5.	429—4—5.	429—4—5.	1878—79...	185	15	1
							1879—80...	480	8	1
							Total...	666	7	2

The 2nd July 1880.

No. 36.—It is hereby notified for public information that all the rights of the present jodidars in the undermentioned jodi village which has been duly attached in satisfaction of the arrears of revenue due to Government (as shewn in the subjoined statement) by the said jodidars, will be sold by public auction at the Taluk office at Nelamangala on the 2nd of August 1880. The sale will commence at 11 A. M. on that date and the village will be knocked down to the highest bidder without reserve.

2. Purchaser will be required to deposit 25 per cent of the purchase money at the time of sale, and where the remainder of the purchase money may not be paid within 15 days from the day of sale, the money so deposited shall be liable to forfeiture.

3. When such deposit shall not be made, nor the remaining purchase money paid up, the lands shall be resold at the expense and risk of the first purchaser.

4. Persons bidding at the sale may be required to state whether they bid on their own account or as agents, and in the latter case to deposit a written authority signed by their principals, otherwise their bids may be rejected.

5. The sale shall be stayed, if the defaulter, or any other person acting on his behalf or claiming an interest in the land, tenders the full amount of the arrears of revenue with the interest and other charges, provided such tenders be made before sunset on the day previous to that appointed for the sale.

6. The sale of the property will not become absolute until the sale has been confirmed by the Chief Commissioner.

7. Purchasers having completed the payment of the purchase money will, as soon as the sale has been confirmed by the Chief Commissioner, be placed in immediate possession, and the village will be registered in the name of the purchaser, and a certificate of sale signed and sealed by the Deputy Commissioner will be granted to him. It is to be distinctly understood that the Government are not responsible for errors of description or in estimated extent.

8. Provided parties deeming themselves aggrieved by the sale shall be at liberty to appeal to the Chief Commissioner within 30 days from the day of sale, and the purchase shall be conditional on the final order in such appeal.

Taluk.	Hobli.	Village.	Names of Jodidars.	Boundaries of the Village.	Extent.	Beriz.	Quit-Rent payable annually to Government.	Arrears of Government Revenue for which Village is to be sold.			
								Years.	Amount.		
Nelamangala.	Begur.	Aralasandra.	1st Madhavachar 2nd Pranesha-char 3rd Jayachar.	Bounded on the north by Bedarahalli, on the south Madalkote, on the east Araledibba and Kempahalli, on the west Timmasandra Palya.	A. 405—G. 38.	653—12—0.	204—15—4.	Dhatu ...	183	11	10
								Iswara ...	159	11	10
								Bahudhanya	190	7	7
								Total.....	533	15	3

The 19th July 1880.

No. 39.—C. D. Ramaswamaiya, Acting 5th Grade Amildar of the Channarayapatna Taluk, is confirmed in the appointment.

The 23rd July 1880.

No. 40.—The following appointments and transfers of Amildars are ordered :—

Gopalkrishnaiengar, Amildar of the Heggaddevankote Taluk, to be Amildar and 3rd Class Magistrate of the Narsipur Taluk, *vice* Ramanna retired.

Syed Amir Hasan, 2nd Class Police Inspector of the Hassan District, to act as Amildar and 3rd Class Magistrate of the Narsipur Taluk, during Gopalkrishnaiengar's absence on leave, or until further orders.

S. Krishna Múrti, Head Munshi of the District and Sessions Judge's Court, Ashtagram Division, to be Amildar and 3rd Class Magistrate of the Yedatore Taluk on probation.

Raghunath Rao, Amildar of the Yedatore Taluk, to be Amildar and 3rd Class Magistrate of the Heggaddevankote Taluk, but to continue on the special duty on which he is now employed until further orders.

By Order,

C. RANGACHARLU,
Revenue Secretary.

PUBLIC WORKS DEPARTMENT.

NOTIFICATION.

The 16th July 1880.

No. 21.—Mr. G. W. Winckler, Assistant Engineer, 1st Grade, passed the professional and departmental standard tests prescribed in Public Works Code, Chapter 2, Section 1, Paras 16 and 17 and 21, on the 10th and 12th July 1880.

By Order,

W. R. JOHNSON, *Lieut.-Col.,*
Secretary, P. W. D.

THE

MYSORE GAZETTE.

No. 30 Published by Authority. of 1880.

BANGALORE, SATURDAY, JULY 31, 1880.

☞ Separate paging is given to this Part in order that it may be filed as a separate compilation.

CONTENTS.

	PAGE.
PART I.—Notifications by the Chief Commissioner of Mysore and Coorg.—Notifications by the Government of India...	193—196
PART II.—Notifications, &c., by the Judicial Commissioner; Survey and Settlement Commissioner; Superintendent of Inam Settlements; Deputy Accountant General; Public Works Officers; Military Assistant; Inspector General of Registration; Director of Public Instruction; Deputy Surgeon General of Hospitals; Anche Bakshi; President of the Municipal Boards; District and Sessions Judges; Deputy Commissioners of Districts.—Season Reports; Meteorological Registers; Postal Notices, &c.	405—424
PART III.—Acts of the Governor General of India in Council, &c.	Nil
PART IV.—Miscellaneous Papers	Nil
SUPPLEMENT.—Escaped Convicts	1—3
2nd do Abstract of Season or Intermediate Reports, &c...	1—2

PART I.

Notifications by the Chief Commissioner of Mysore.

GENERAL DEPARTMENT.

NOTIFICATIONS.

The 24th July 1880.

No. 75.—Surgeon P. H. Benson, M. B., Civil Surgeon, received Medical charge of the Nagar Division, from Mr. G. Watts, Apothecary, on the forenoon of the 20th July 1880.

The 28th July 1880.

No. 76.—Mr. N. Venkat Rao, Attaché, delivered over, and Mr. E. Chitambram Iyer, Subordinate Judge, received, charge of the Túmkúr District Treasury and Jail, on the afternoon of the 20th July 1880.

No. 77.—Mr. L. Ricketts, Deputy Commissioner, returned from the privilege leave granted to him in Chief Commissioner's Notification No. 8, dated 7th April 1880, and received charge of the Bangalore District and Treasury from Captain E. P. Maltby, on the afternoon of the 26th July 1880.

The 30th July 1880.

No. 78.—C. Subba Rao, Judicial Head Munshi, Deputy Commissioner's Office, Shimoga District, is appointed to act as Munsiff, 3rd Grade, at Húnsúr, *vice* Mr. J. W. Knight employed on other duty.

No. 79.—Mr. P. N. Púrnaiya, B. A., Revenue Assistant Commissioner, Mysore District, is granted privilege leave of absence for two months, under Section 44 of the Civil Leave Code, with effect from the 1st August 1880, or from such other date as he may avail himself of it.

By Order,

W. J. CUNINGHAM,
Secretary.

REVENUE DEPARTMENT.

NOTIFICATIONS.

The 26th July 1880.

No. 41.—It is hereby notified for public information that all the rights of the present jodidars in the undermentioned jodi village, which has been duly attached in satisfaction of the arrears of revenue due to Government by the said jodidars, will be sold by public auction at the Deputy Commissioner's Office at Chitaldroog, on Thursday the 2nd September 1880, before the Deputy Commissioner, or, in his absence, before the Assistant Commissioner present. The sale will commence at 11 A. M. on that date and the village will be knocked down to the highest bidder without reserve.

2. Purchaser will be required to deposit 25 per cent of the purchase money at the time of sale, and where the remainder of the purchase money may not be paid within 15 days from the day of sale, the money so deposited shall be liable to forfeiture.

3. When such deposit shall not be made, nor the remaining purchase money paid up, the lands shall be re-sold at the expense and risk of the first purchaser.

4. Persons bidding at the sale may be required to state whether they bid on their own account or as agents, and in the latter case to deposit a written authority signed by their principals, otherwise their bids may be rejected.

5. The sale shall be stayed, if the defaulter, or any other person acting on his behalf or claiming an interest in the land, tenders the full amount of the arrears of revenue with the interest and other charges, provided such tender be made before sunset on the day previous to that appointed for the sale.

6. The sale of the property will not become absolute until the sale has been confirmed by the Chief Commissioner.

7. Purchasers having completed the payment of the purchase money will, as soon as the sale has been confirmed by the Chief Commissioner, be placed in immediate possession, and the village will be registered in the name of the purchaser, and a certificate of sale signed and sealed by the Deputy Commissioner will be granted to him. It is to be distinctly understood that the Government are not responsible for errors of description or in estimated extent.

8. Provided parties deeming themselves aggrieved by the sale shall be at liberty to appeal to the Chief Commissioner within 30 days from the day of sale, and the purchase shall be conditional on the final order in such appeal.

Taluk.	Village.	Name of Jodidar.	Boundaries of the Village.	Estimated Extent.	Estimated Gross Rental or Beriz.	Annual Quit-Rent (excluding local and irrigation cesses) payable to Government.	Arrears of Government Revenue including Local Cess for which Village is to be sold.			
							Years.	Amount.		
Hosdurga.	Malali.	Putta Bhatt and 4 others.	Bounded on the north by Pilapura, on the south Kondaji and Kangolli villages, on the east Sangenballi, Machanahalli, and Channasamudra, on the west Nirgunta.	A. 434 G. 23.	256—15—3.	253—1—0.	1876—77...	177	0	9
							1877—78...	147	0	7
							1878—79...	196	0	9
							1879—80...	137	1	0
							Total...	657	3	1

The 28th July 1880.

No. 42.—Under the provisions of Section 6 of the Land Acquisition Act X of 1870, it is hereby declared that the undermentioned properties situated in the Nagarta Pettah of the Town of Bangalore are required by the Town Municipality of Bangalore for public purposes, *viz.*, the extension of the cross lanes in that pettah. A sketch plan of the sites may be seen on application at the Office of the Deputy Commissioner, Bangalore District.

SPECIFICATION.

No. I, Deviramma's property.

Bounded on the north by Nagarta Pettah main road.
Do south by lane from Ganigar Pettah.
Do east by do
Do west by Deviramma's own property.
Comprising 21 square yards and 6 square feet.

No. II, Sampangi's property.

Bounded on the north by Nagarta Pettah main road.
Do south by Ganigar Pettah lane.
Do east by do
Do west by Sampangi's property.
Comprising 26 square yards and 4 square feet.

No. III, Venkatramanappa's property.

Bounded on the north by lane from Ganigar Pettah to Nargarta Pettah main road.
Do south by do
Do east by do
Do west by Venkatramanappa's property.
Comprising 9 square yards and 4 square feet.

The 24th July 1880.

No. 43.—Budan Sheriff, Clerk in the Judicial Commissioner's Office, is appointed to act as 5th Grade Amildar and 3rd Class Magistrate of the Devanhalli Taluk, during the absence of Svetadraiengar on leave, or until further orders.

The 29th July 1880.

No. 44.—Ibrahim Bég, Amildar of Malvalli, is granted 15 days' privilege leave from such date as he may avail himself of the same.

By Order,

C. RANGACHARLU,
Revenue Secretary.

Notifications by the Chief Commissioner of Coorg.

GENERAL.

NOTIFICATION.

The 30th July 1880.

No. 11.—Under Sections 14 and 54 of the Prisons' Act XXVI of 1870, the Chief Commissioner is pleased to extend to the Province of Coorg, the rules contained in the Mysore Jail Manual.

By Order,

W. J. CUNINGHAM,
Secretary.

List of Papers placed at the disposal of the Press.

No.	No. of Letters.	Date.	Subject.
1	2001—551 ...	22nd June 1880...	Reviewing the Anche Report for 1879—80.
2	2537—47 ...	13th July do ...	Reviewing the Annual Administration Report on Jails for 1879—80.
3	2562—49 ...	14th do ...	Intimating that District Magistrates have the power to prohibit the right of "Sidi" and other barbarous observances.

THE

MYSORE GAZETTE.

No. 31 Published by Authority. of 1880.

BANGALORE, SATURDAY, AUGUST 7, 1880.

☞ Separate paging is given to this Part in order that it may be filed as a separate compilation.

CONTENTS.

	PAGE.
PART I.—Notifications by the Chief Commissioner of Mysore and Coorg.—Notifications by the Government of India...	197—211
PART II.—Notifications, &c., by the Judicial Commissioner; Survey and Settlement Commissioner; Superintendent of Inam Settlements; Deputy Accountant General; Public Works Officers; Military Assistant; Inspector General of Registration; Director of Public Instruction; Deputy Surgeon General of Hospitals; Anche Bakshi; President of the Municipal Boards; District and Sessions Judges; Deputy Commissioners of Districts.—Season Reports; Meteorological Registers; Postal Notices, &c.	425—430
PART III.—Acts of the Governor General of India in Council, &c.	Nil.
PART IV.—Miscellaneous Papers	Nil.
SUPPLEMENT.—Abstract of Season or Intermediate Reports, &c...	1—2

PART I.

Proceedings of the Chief Commissioner of Mysore in the General Department, (General),—dated 4th August 1880.

From the Under-Secretary to the Government of India, Foreign Department—General—To the Chief Commissioner of Mysore, No. 670 I. G., dated Simla, the 2nd July 1880.

I am directed to forward for your information copy of the correspondence noted in the margin, regarding the maintenance of cemeteries at non-military stations in Mysore.

From Madras Government to Government of India, No. 3, dated 5th January 1880.
To Madras Government from Home, Revenue and Agricultural Department, No. 122, dated 15th June 1880.

2. You will see that it has been decided that for the future these cemeteries will be placed under the control of the Chief Commissioner, and that the cost of this maintenance will be borne by Imperial funds. I am to say that the Government of India also consider it desirable that these cemeteries should be brought under the rules of 12th December 1877.

Proceedings of the Madras Government, Ecclesiastical Department.

Read the following papers :—

Letter from the Venerable the Archdeacon, No. 69, dated 15th October 1879.

Letter from the Venerable the Archdeacon, No. 73, dated 29th October 1879.

Letter from the Secretary to the Chief Commissioner of Mysore, No. 6715—G. 1389, dated 22nd December 1879.

Order thereon, No. 3. 5th January 1880.

His Grace the Governor in Council doubts whether the maintenance of cemeteries in the Province of Mysore, at other than military stations, is a proper charge on the Madras Presidency.

2. The papers will be submitted to the Government of India for their consideration.

From the Under-Secretary to the Government of India, Home, Revenue and Agricultural Department—Ecclesiastical—To the Secretary to the Government of Madras, No. 122, dated Simla, the 15th June 1880.

I am directed to acknowledge the receipt of your No. 3 B., dated the 5th January last, forwarding for the consideration of the Government of India, certain papers connected with the question whether the maintenance of cemeteries in the Province of Mysore, at other than military stations, is a proper charge on the Madras Provincial revenues.

2. In reply I am to say that the Governor General in Council has been pleased to decide that the cost of the maintenance of cemeteries at non-military stations in Mysore shall be debited to Imperial revenues. I am to add that the cemeteries in question will be placed under the control of the Chief Commissioner of Mysore.

3. The original papers received with your communication under reply are herewith returned.

No. 123.

Copy of correspondence forwarded to the Foreign Department for the issue of further necessary orders to the Chief Commissioner of Mysore.

From the Venerable the Archdeacon of Madras, To the Chief Commissioner of Mysore, dated Madras, 19th July 1880.

In reference to G. O. Ecclesiastical Department No. 124, dated 30th June 1880, I have been called upon by the Accountant General, Madras, to furnish a list of cemeteries in Mysore, which are affected by the decision of the Government of India in para 2 of their letter recorded in the above order. Will you be kind enough to give instructions that I may be furnished with a list?

Under instructions from Government I am preparing a revised list of cemeteries throughout the Presidency, and in writing to the Collectors of Districts to be furnished with a list of cemeteries under their charge, I have requested them to state not only the names of cemeteries, but whether not used or used, and the area of each in 3 columns.

Name of Cemetery.	Used or not used, *i. e.*, closed.	Area.

I shall be much obliged if you will furnish me with returns in Mysore in the same form.

No. 3287-3297—G. 854, DATED BANGALORE, 4TH AUGUST 1880.

ORDER.—The Government of India having directed that cemeteries in Mysore situated at other than military stations should be placed under the control of the Chief Commissioner and brought under the operation of the rules published in Home Department Notification No. 421, dated 12th December 1877, the Chief Commissioner directs that those rules as subsequently amended, be published in the *Mysore Gazette* and be made applicable to cemeteries at civil stations in Mysore from the date of the Government letter printed above.

2. Deputy Commissioners of Districts are requested to send in lists of all cemeteries within their District in the form given in the letter from the Venerable the Archdeacon, and to add in a column of remarks what establishment, if any, is now maintained in each cemetery, by whom paid, and at what rate. The strength of establishment for the future is ruled by the area of the cemetery in accordance with Rule 2 of Resolution No. 6, dated 9th November 1876, but for the rates of pay to be sanctioned for "Mali Chaukidars" and coolies, Deputy Commissioners will make suggestions in accordance with the rates prevailing in the Districts for men of that class.

3. According to Rule I, Clauses 3 and 4 of Part I of the Rules published in the Notification No. 421 of 12th December 1877 in civil stations where there is no Chaplain or Church Committee the Deputy Commissioner is to nominate a subordinate officer to be in

charge of the cemetery. In sending up the lists of cemeteries therefore, Deputy Commissioners are requested to state the names of the officers so nominated by them.

4. Rule XII of Part I requires that a list of monuments of archæological or historical interest should be obtained, and as many of them as may be properly maintained at the public expense should be looked after by the Public Works Department; Deputy Commissioners will therefore furnish the Executive Engineer of the District with the lists of such monuments and that officer will obtain the orders of the Superintending Engineer on the subject.

5. All receipts on account of cemeteries are to be paid into the Treasury to the credit of the Imperial Department Public Works. The Deputy Accountant General will issue any instructions necessary for the proper crediting and accounting for these receipts with Her Majesty's Treasury at Bangalore.

6. In the matter of expenditure, it will be observed that the cost of the maintenance of the cemeteries will be borne by the Imperial Government. The District Magistrate and Chaplain together frame a budget providing for establishment and Church furniture, and other items are provided by a budget framed by the Executive Engineer and Chaplain jointly. The time for the preparation of these budgets for the current year has passed, but on receipt of the statements called for from the Deputy Commissioners a supplemental budget for establishment will be prepared in this Office, with proposition statements for the entertainment of the new establishment, and estimates for such repairs as are urgently required to be executed in the current year may be framed by the Executive Engineers and budgets prepared to meet the anticipated expenditure. On sanction being accorded to these suplemental budgets the Deputy Accountant General and Examiner, Public Works Accounts, respectively, will issue instructions to Deputy Commissioners and Executive Engineers as to the manner of drawing the money.

W. J. CUNINGHAM,
Secretary.

Notifications by the Chief Commissioner of Mysore.

GENERAL DEPARTMENT.

NOTIFICATIONS.

The 4th August 1880.

No. 80.—In accordance with the instructions of the Government of India, the Chief Commissioner declares the following rules published in Government of India Notification in the Home Department No. 421, dated 12th December 1877, as modified by the *orders noted in the margin, are applicable to cemeteries at civil stations in Mysore from the 2nd July 1880 :—

*Home Department Ecclesiastical. Home Department Ecclesiastical. Home, Revenue and Agricultural Department. Ecclesiastical.

Office Memorandum No. 5—421, dated 29th November 1878. Notification No. 159, dated 16th May 1879. Notification No. 238, dated 25th July 1879.

I.

Rules for the care and use of Government Cemeteries throughout India except those in the Presidency Town of the Diocese of Calcutta.

CHARGE OF THE CEMETERY.

RULE I.—(1).—The Resident Chaplain of a station has charge of the general cemetery and frames an estimate of the expenditure connected therewith in accordance with the directions contained in para 1, Home Department* Resolution No. 6—370-382, dated 9th November 1876.

* Appendix A.

(2.)—The term "Resident Chaplain" includes a Clergyman of the Additional Clergy Society so far as concerns the stations to which he stands appointed, or other Clergyman of Church of England placed in charge by the Bishop.

(3.)—During the temporary absence of the Chaplain, and at stations where there is no Resident Chaplain, the charge of the cemetery belongs to the Chief Magistrate on the spot, or the senior Military Officer if the cemetery is attached to a military cantonment.

(4.)—At out-stations where there is a Church Committee the charge of the cemetery will belong to the senior member of Committee, and where there is no such Committee, to any subordinate officer nominated by the Magistrate or Deputy Commissioner of the District.

RULE II.—Each cemetery is allowed a mali-chaukidar or chaukidars in accordance with the scale prescribed in para 2, Home Department Resolution * No. 6—370-382, dated 9th November 1876. These chaukidars are paid by Government through the Resident Chaplain by whom they are appointed and dismissed. In stations where there is no Resident Chaplain, the chaukidars are paid, appointed and dismissed by the other officers named in Rule I.

* Appendix A.

RULE III.—Every reasonable effort should be made by the Resident Chaplain or other officer in charge under Rule I, not only to keep the cemetery in decent order, but to preserve its character as the resting-place of the remains of departed friends by providing for the necessary repairs, and by planting the ground with suitable trees.

NOTE.—To meet the expenditure under this Rule, see Rule I, and para 1 of Home Department Resolution † No. 6—370-382, dated 9th November 1876.

† Appendix A.

RULE IV.—The chaukidar will keep the key of the cemetery under the direction of the officer in charge.

RULE V.—The officer who has charge of the cemetery under the operation of Rule I will perform all the duties assigned to the Chaplain by Rules VII, VIII, IX, X and XI, with the exception of the approval of the inscriptions in that part of the cemetery reserved for the Church of England. These are to be forwarded to the visiting Chaplain, or, if there be none, to the Archdeacon, and not cut till his sanction be obtained. Should, however, an inscription be disapproved, it may be referred to the Government for decision.

INTERMENTS BY WHOM TO BE CONDUCTED.

RULE VI.—(1.)—The Chaplain buries Christians of all denominations whose friends desire his services as laid down in the orders of the Government of India in the Home Department ‡ No. 159, dated the 6th June 1877, using always the service of the Church of England, and the consecrated portion of the cemetery.

‡ Appendix B.

(2.)—A portion of every cemetery will be set apart by the orders of Government for the use of Roman Catholic congregations, and another portion will be appropriated for the joint use of other Christians whose friends desire that they should be interred otherwise than according to the ritual of either the Church of England or of the Church of Rome, or who cannot legally be so interred.

(3.)—These unconsecrated portions thus set apart are not to be fenced or walled off from the rest of the cemetery, but simply divided off by a pathway, and they must be added to the existing cemetery or reserved from it. If the existing cemetery be large enough for the wants of the whole Christian community, such portions will be reserved, without reference to the fact that the whole enclosure has or has not been consecrated according to the rites of the Church of England. If the cemetery be only large enough for the wants of Christians desiring to be buried with the service of the Church of England, such portions will be added. The whole cemetery thus divided is to be surrounded by a wall, to have but one gate of entrance, and to be under the care of the officer specified in Rule I.

RULE VII.—(1.)—Ministers of all denominations have a right to conduct the service of burial over the body of any deceased member of their respective congregations who may be buried in any fitting portion of the ground set apart for the denomination to which the deceased belonged. At least six hours' previous notice of the burial should be given to the Chaplain in charge of the burial ground or, in the absence of the Chaplain, to the officer who may be in actual charge. The period herein prescribed may, for special reasons, be shortened with the permission of the Chaplain or officer in charge of the

cemetery. Such Chaplain or officer will, if he thinks the circumstances of the case demand it, bring the facts to the notice of the local Magisterial authorities in time to admit of an order stopping the burial being passed if necessary.

(2.) A certificate of burial drawn up according to the required form must be sent to the Chaplain or to the Registrar of Births, Marriages and Deaths, to be entered in the register kept up by him.

RULE VIII.—No burial can take place in that part of a Government cemetery which has been set apart for the use of members of the Church of England, unless the service prescribed by that Church is read by the Chaplain if there be one, or, in his absence, by the layman who officiates at the funeral. But a person may be interred in the other portions of a Government cemetery with or without the use of any services of religion.

ARRANGEMENTS FOR BURYING.

RULE IX.—The arrangements for making the necessary preparations for digging graves, preparing coffins, and the like, should rest in military stations upon the senior military officer, and in civil stations upon the chief local Magistrate. These officers are authorized to direct any local Public Works officer to supply all that is necessary. The local Public Works officer would usually be the Executive Engineer of Military Works in military stations, and the Civil Executive Engineer in other stations. The expenditure incurred by the Executive Engineer will be held in his miscellaneous advance account until repaid by the officer authorizing the expenditure. But in cases of necessity or emergency, either officer may be called upon to do what is required.

RULE X.—The officer in charge of the cemetery shall keep a plan of the entire cemetery to be provided by the Public Works Department, with references written upon it, in a book, in which the names of parties interred are recorded; this plan and book being kept with the church registers.

ERECTION AND REPAIR OF MONUMENTS.

RULE XI.—Monuments may be erected by any interested person. The inscription before being cut, and the design, must be first approved of as laid down in Rule V, and the dimensions of the monument must accord with the orders in para 3, Home Department Resolution* No. 6—370-82, dated 9th November 1876.

* Appendix A.

RULE XII.—(1.) The Chaplain should communicate with the friends of the deceased when a monument needs repairing, or, when such communication is not possible, advertise three times in the *Gazette of India* and the Gazette of the Province; and if it falls into a ruinous condition, and no party will undertake to restore it, the ruined monument must be made level with the ground during the next repairs, and any slab it contained must be placed over the grave in simple masonry, or be inserted in the wall.

(2.) All work connected with monuments must, as far as possible, be carried on outside the cemetery, and any undertaker not removing the débris of his work immediately upon its completion is liable to a fine of Rs. 5.

NOTE.—This rule does not apply to monuments of historical or archæological interest. List of such tombs should be obtained by Local Governments and Administrations, and as many of them as may be properly preserved at the public expense should be looked after by the local Public Works Department.

INSPECTION.

RULE XIII.—The cemetery should be inspected once in a half-year by the Chaplain in company with the Executive Engineer, the plan and book kept under Rule X being also examined, and a report made to the Archdeacon, and recorded in the Ecclesiastical record-book of the station, and also in the Engineer's Office.

RULE XIV.—(1.) Commissioners of Divisions should inspect cemeteries, whether closed or in use, within their respective jurisdictions, in the course of their annual tours, and should bring to the notice of the Local Government any instances of cemeteries which are negligently kept, or which the officers in charge may have allowed to fall into a state of bad repair or disorder. All cemeteries are equally subject to the visitation and supervision of the Bishop and Archdeacon.

(2.) Sanitary officers in cantonments are invited to inspect cemeteries within their respective cantonments, and to report to Local Governments any matter calling for notice.

MISCELLANEOUS.

RULE XV.—It is desirable that officers commanding regiments or detachments should be instructed to cause a report to be made to the nearest civil officer of graves dug for soldiers on march, that measures may be taken for their effectual protection and preservation. These graves and all scattered Christian graves throughout the district are under the care of the local civil authorities.

RULE XVI.—The above rules do not apply to Presidency cemeteries which have rules of their own.

II.

Rules regarding the levy and expenditure of fees on masonry graves and monuments in Cemeteries and Churches throughout India.

WHAT FEES ARE PAYABLE AND BY WHOM.

RULE I.—A fee of 8 annas for every square foot of ground occupied shall be charged for the construction of any masonry grave in a burial-ground.

NOTES.—(1.) This fee is independent of the actual charge for making a grave.

(2.) The fee, leviable on a masonry grave regularly built up to the level of the ground is also leviable on a masonry grave which is not built up to the level of the ground, but which is only over and round the coffin.

(3.) The "ground occupied" is to be regulated according to the rule laid down in paragraph 3 of Home Department Resolution * No. 6—370-382, dated 9th November last.

*Appendix A.

(4.) The same fees which are levied on pucka graves should also be levied on kutcha graves which have pucka foundations.

RULE II.— A further fee of one rupee per square foot shall be levied on the erection of a monument in a burial-ground; provided, however, that for a simple headstone or flat slab not more than 3 feet 6 inches in height or length, and 2 feet in width, a uniform fee of Rs. 5 only shall be charged. A fee of Rs. 75 shall be levied on a faculty for the erection of a monument in a church.

NOTES.—(1.) A tablet on the wall of a cemetery is to be regarded as a monument.

(2.) "Simple headstone." A cross no higher than a usual headstone and no longer than a usual flat stone, is included in this description.

(3.) When a monument erected over a masonry grave, the total of the two fees will be equivalent to one and a half rupee for each square foot of ground occupied.

(4.) The fee of Rs. 75 levied on a faculty, drawn in the case of non-Government churches by the present incumbents of the office of Register of the Diocese in Calcutta and Bombay, shall cease on a vacancy occurring in the appointment. The money is to be spent in charity as in the case of Government churches.

RULE III.—When a cenotaph is erected in a cemetery, a fee of Rs. 50 should be levied in addition to the fee charged for the ground occupied, and the space should be strictly limited to six feet square.

RULE IV.—Fees for masonry graves and monuments should be levied over the whole cemetery, including those portions which are used by Roman Catholics and Non-conformists.

NOTES.—(1.) The same rules in regard to fees apply to all graves, whether of Roman Catholics, of Non-conformists or members of the Established Church.

(2.) Where a parcel of ground used for burial by a Christian community of any particular denomination other than the Established Church of England forms no part of the general cemetery but is separate from it, or where, although not so separate, it is clearly distinguishable and was not originally acquired, and has not been kept up at the expense of the State, then, if the community by which the ground is used so desire, the Government will give up all claim to fees, on the distinct understanding that it is divested of all responsibility for the maintenance of the cemetery in proper order. On the other hand, where such parcels of ground form part of a cemetery of the Established Church or the general Christian community, provided and maintained by the Government, no distinction can be made as to keeping up any one part of the cemetery, nor should any exemption from fees be permitted.

EXEMPTION FROM FEES IN GOVERNMENT CEMETERIES.

RULE V.—British soldiers and non-commissioned officers are exempted, with retrospective effect from the payment of any fee for the construction of masonry graves, or for the erection of monuments in burial-grounds to the memory of their comrades, wives or children. The widows and children of British soldiers and non-commissioned officers are also exempted from payment of these fees in the case of their deceased husbands or parents. No monument, either regimental or private, shall exceed the dimensions prescribed in paragraph 3, Home Department Resolution* No. 6—370-382, dated 9th November 1876.

* Appendix A.

NOTES.—(1.) This rule is applicable to the British soldiers and non-commissioned officers whether in military or civil employ.

(2.) Monuments erected under this rule subscribed for partly by non-commissioned officers and men, and partly by officers, are likewise exempted from the prescribed fee.

(3.) Warrant officers are not exempted from payment of ecclesiastical fees.

RULE VI.—The Chunar pensioners being more or less under military control come under the category of soldiers, and are therefore entitled to the same exemptions as soldiers. But this ruling does not apply to other pensioners who are not similarly under military control.

RULE VII.—The Chaplain may at his discretion reduce, or altogether remit in cases of extreme poverty, the fee leviable on the construction of masonry graves, but not for the erection of monuments.

NOTE.—The Bishop on special occasions may sanction a reduction or remission of fees for the erection of monuments.

FEES BY WHOM TO BE COLLECTED.

RULE VIII.—In those stations in which a mason has been appointed, who alone is allowed to work within the cemetery, he is required, in exchange for the monopoly, to collect the fees on monuments and masonry graves, and pay them to the Chaplain: and any person ordering the construction of a masonry grave or monument by a mason or undertaker other than the person appointed by the Chaplain must pay the fees in advance.

NOTE.—Fees on masonry graves and monuments constructed by the appointed mason or undertaker need not be paid in advance, but in case of failure of payment, their recovery must be entrusted by the Chaplain to the Magistrate or Deputy Commissioner as the case may be.

FEES TO WHOM TO BE PAID.

RULE IX.—The fees prescribed in Rules 1, 2 and 3 should be paid to the Chaplain or, in the absence of the Chaplain, to the officer in charge of the burial-ground and remitted at once to the Civil treasury, except fees for monuments in churches which should be paid over by the Chaplain to the charitable objects to which the Bishop assigns them when his faculty is issued.

CEMETERY RECEIPTS AND CHARGES.

RULE X.—All cemetery receipts and charges to be regulated as laid down in para 4 of Home Department Resolution † No. 6—370-382, dated the 9th November 1876.

† Appendix A.

MISCELLANEOUS.

RULE XI.—(1.) A person may not purchase a portion of a Government cemetery as a burial-place for himself and his family, so as to have a right to fence it with a rail or fence, and thus make it the private property of himself and family. But when such rights already exist, they are not without reason to be interfered with, and special cases as they arise may require exceptional treatment. And in such cases the Archdeacon may exercise his discretion with the sanction of the Local Government.

(2.)—All private rights must, however, cease if for sanitary or other public reasons the cemetery is closed against burials, or even that portion of it in which the private ground is situated, but in special cases the Archdeacon may exercise his discretion of giving permission to open a vault or masonry grave.

(3.)—No kutcha grave can be opened in any cemetery for the purpose of converting it into a masonry grave without application to the Archdeacon which must be accompanied by a certificate from the Principal Medical Officer that this may be done without risk to public health.

RULE XII.—(1.) When a piece of ground is granted by Government as a cemetery to a Railway Company for the interment of its own servants, which afterwards keeps it in repair and provides the necessary establishment, so that beyond the original grant of ground Government is at no expense, the collection and application of fees accruing is left to the decision of the Railway Company which maintains the cemetery in good order and repair.

(2).—The Commissioner or District or Judicial Officer, and in military stations the Officer commanding should inspect such cemeteries and report to Government if they find them negligently kept.

III.

Other Ecclesiastical Fees.

RULE I.—No fees are charged for the performance of the rite of baptism or burial, or for the registration of the performance of these offices.

RULE II.—In addition to the fee for the Surrogate's license, a fee of Rs. 10 shall be charged on all marriages by license, except the marriages of officers and others in the Military or Naval Service of Her Majesty.

RULE III.—The fee for a Surrogate's license shall be Rs. 50 both at the Presidency towns and in the interior. No fee shall be charged on marriages by banns.

RULE IV.—When registers are searched and a copy of any entry given, a fee of rupee one shall be charged for the first year, * and four annas for every additional year over which the search may extend; as well as a fee of rupee one for the certificate. Soldiers, sailors and non-commissioned and petty officers are exempted from payment.

* The first year shall be taken to mean any one year indicated by the applicant.

NOTE.—The amount of fees payable for marriages performed, and for searching registers kept in accordance with the provisions of Act XV of 1872 (The Indian Christian Marriage Act) is fixed by each Local Government.

APPENDIX A.

Extract from the Proceedings of the Government of India in the Home Department (Ecclesiastical),—Nos. 6—370-382, dated Simla, the 9th November 1876.

READ Home Department Resolution Nos. 314 to 318, dated 6th October 1875, appointing a Committee to report upon the following matters connected with ecclesiastical administration :—

(1) The framing of joint-estimates for expenditure on cemeteries or churches by the Executive Engineer and the Clergyman in charge.

(2) A revision of establishments for cemeteries according to their area.
(3) The size of monuments and amount of ground that may be enclosed.
(4) Provision for planting cemeteries and preserving them in decent order.
(5) Mode of supply of certain articles of church furniture.
(6) The substitution of three for two classes of churches with respect to the expenditure allowed for them by Government.

Read the Report of the Committee, dated 29th October 1875.

RESOLUTION.

The Report of the Committee has been considered by the Governor General in Council, who desires to express to the Committee his satisfaction at the result of their labors.

The following rules have been approved relative to the subjects referred to the Committee for report :—

Public Works Department No. 483 A—G, dated 13th July 1874.

1. Churches and cemeteries have already been divided into two classes : (1) those in stations where there are military cantonments and the military works in which are under the charge of the Inspector General of Military Works, and (2) those in other military cantonments and civil stations.

In both classes of stations joint-estimates* of expenditure should be framed annually by the undermentioned officers :—

(See Financial Department Resolution No. 87, dated 9th January 1875.)

(*a*) In the case of all expenditure connected with establishments, *e. g.*, pay of servants, alterations in their pay or number, &c., also all expenditure by Government connected with the provision of articles of church furniture supplied by the Civil Department. } By the Chief Magistrate of the District and by the Chaplain.

(See Financial Department Resolutions No. 87, dated 9th January 1875, No. 2024, dated 31st March 1875, No. 675, dated 9th February 1876.)

(*b*) In the case of all expenditure connected with repairs and additions to church fabric, to church compound or cemetery walls, to cemetery gates, walks, wells, chaukidars or other church servants' houses, provision of necessary appliances for graves or for the repair of tombs or for the planting of trees and shrubs in cemeteries and keeping the same in decent order ; also all expenditure by Government connected with the provision of articles of church furniture supplied by the Public Works Department. } By the Executive Engineer and by the Chaplain.

The estimates of expenditure to be prepared by the Executive Engineer and the Chaplain should shew distinctly the probable charge under each of the following heads :—

I.—New works connected with additions to existing churches and improvements to church compounds.

II.—New supplies of furniture for churches and sanctioned articles of church use.

III.—New works connected with additions to existing burial-grounds.

IV.—Repairs to churches and church furniture and maintenance of church compounds.

V.—Repairs to burial-grounds to be executed by Public Works Officers.

VI.—Repairs to burial-grounds, including planting and cleaning, to be entrusted to the Chaplain or Chief Civil or Military Officer of the Station or Cantonment under para 4.

It would be convenient if distinct estimates were prepared for each of these classes of expenditure.

The provision of funds to meet the charges above enumerated will be made in the budget-estimate for the Public Works Department. The estimates for the same will be subject to the scrutiny of and be passed by the Superintending or Chief Engineer or Local Government or Administration, according to the rules in force in the Public Works Department.

---

* NOTE.—The estimates should be for the financial year and should be prepared in advance, as is prescribed for other budget-estimates.

In stations in which the churches and burial-grounds are under the Local Governments and Administrations in which the Provincial Service arrangements are in force, the charges debitable to the Public Works Department will be provided for in the Provincial Public Works budget-estimate. In other Provinces and in the Military Works Branch the charge will be provided for in the Imperial Public Works budget-estimate under Civil Buildings.

2. The following scale of establishments should be maintained at all cemeteries :—

(I) for a cemetery of which the area is five acres or less, one mali-chaukidar ;

(II) for a cemetery of which the area is more than five and less than 10 acres, one mali-chaukidar and one assistant cooly ;

(III) for a cemetery of which the area is more than 10 and less than 15 acres, one mali-chaukidar and two assistant coolies ; and

(IV) for a cemetery of which the area is more than 15 acres, one mali-chaukidar and three assistant coolies.

It is left to the Local Governments and Administrations to determine the proper wages to be given to each servant. The cost of this establishment will be charged to Provincial Services in the case of those Local Governments and Administrations in which the Provincial Service arrangements are in force, and in the case of other Local Governments and Administrations and the Military Works Branch of the Public Works Department to Imperial Funds. In either case the charge will be included in the Civil budget-estimate.

3. The size of kutcha and pucka graves should be limited to 8' × 4', and the amount of ground to be enclosed should be restricted to 11' × 7', by external measurement in both cases. No monument over a pucka grave must exceed 8' × 4' at the base, except with the previous sanction of the Local Government concerned. A simple cross or head-stone on an adequate masonry foundation, not exceeding 3' × 2', is the only monument that should be allowed over a kutcha grave. The Archdeacon or, in his absence, the Bishop may, on sufficient cause being shewn, permit a kutcha grave to be enclosed by a railing, other than wooden, on condition that the same fee is paid as is levied on the construction of masonry graves.

4. No portion of the receipts from cemeteries and church compounds should be retained by any Government officer to be directly expended by himself, all such receipts should be paid into the Civil Treasury to the credit of the Public Works Department. In the case of receipts from cemeteries and church compounds in charge of the Military Works Branch and under those Governments and Administrations in which the Provincial Service arrangements are not in force, the credit will be treated in the Public Works accounts as a receipt under Imperial Public Works Revenue. In the case of the other Governments and Administrations the credit will be raised to Provincial Service Public Works Revenue. But the amount passed upon the joint-estimate framed by the Executive Engineer and Chaplain to provide for planting a cemetery and preserving it in decent order should be entrusted to the Chaplain where there is one. Where there is no Resident Chaplain, the amount should be placed at the disposal of the Chief Magistrate on the spot, or of the senior Military Officer if the cemetery is attached to a military cantonment. The necessary funds for the purpose will be advanced by the Executive Engineer concerned to the Chaplain or Civil or Military Officer. Bills for the expenditure should be rendered by the officer to whom the advance has been made either monthly or otherwise, to the Executive Engineer, who will charge for the amount thereof in the usual way in his accounts. Until the bills are received and charged off, the advance will be placed in the Miscellaneous Advance Account of the Executive Engineer. All planting of shrubs and trees by private persons in cemeteries should be under the control of the Chaplain if resident, otherwise under that of the Magistrate or senior Military Officer, as the case may be. When practicable a well should be sunk in or near every cemetery.

In connection with the preservation of cemeteries in decent order attention is invited to the rule cited on the margin. This rule, however, should not be applied to monuments of historical or archæological interests. Lists of such tombs should be obtained by Local Governments and Administrations, and as many of them as may be properly preserved at the public expense should be looked after by the local Public Works Departments.

The Chaplain should communicate with the friends of the deceased when a monument needs repairing; and if it falls into a ruinous condition, and no party will undertake to restore it, the ruined monument must be made level with the ground during the next repairs, and any slab it contained must be placed over the grave in simple masonry or be inserted in the wall by the Government officer.—(*Rule VIII, Diocese of Calcutta Burial-Ground Rules.*)

5. It should be understood that the Government cannot provide cemeteries at the public expense for Native Christian communities.

6. It is not considered necessary to make any alteration in the existing rules regarding the mode of supply of church furniture.

7. Further orders will be passed on the 6th point referred to the Committee for report.

8. The arrangements for making the necessary preparations for digging graves, preparing coffins, and the like, should rest in military stations upon the senior Military Officer, and civil stations upon the the Chief Local Magistrate. These officers are authorized to direct any Local Public Works Officer to supply all that is necessary. The "Local Public Works Officer" would usually be the Executive Engineer of Military Works in military stations, and the Civil Executive Engineer in other stations. The expenditure incurred by the Executive Engineer will be held in his miscellaneous advance account until repaid by the officer authorizing the expenditure. But in cases of necessity or emergency either officer may be called upon to do what is required.

APPENDIX P.

Extract from the Proceedings of the Government of India in the Home Department (Ecclesiastical),—No. 159, dated Simla, the 6th June 1877.

Read again—

Home Department Resolution Nos. 275—287, dated the 8th September 1875, laying down certain rules for the guidance of Chaplains of the Church of England in regard to burial of suicides, &c.

Read also—

Office Memorandum from the Military Department, No. 810, dated the 16th November 1875, forwarding for an expression of opinion a draft General Order which His Excellency the Commander-in-Chief proposes to issue on the subject in accordance with the above rules.

RESOLUTION.

On a re-consideration of the subject, the Government of India think it necessary to modify the rules contained in the Resolution of 8th September 1875, so far as regards the burial of deceased Roman Catholics. The Government of India have now decided:

1*st*, that at stations where there is a Roman Catholic Priest drawing an allowance from Government, he shall be held bound to read the burial service over the body of every deceased Roman Catholic brought for burial, unless he be excused from doing so by the rubrics and canons of the Roman Catholic Church: and that when the Roman Catholic Priest refuses to read the burial service over the body of a deceased Roman Catholic soldier, the military authorities shall make proper arrangements for the decent interment of the corpse;

2*ndly*, that where there is no Roman Catholic Priest paid by the State, the Protestant Chaplain shall, if requested by the friends of the deceased, or by the Officer commanding, be bound to bury the deceased according to the rites and ritual of the Church of England, except in either of the three cases in which Protestant Chaplains in India are excused from burying a deceased Protestant, *viz.*, dying unbaptized even by lay baptism; excommunicated by the major excommunication; or declared to be *felo de se*; and that when a Protestant Chaplain refuses to officiate at the burial of a deceased Roman Catholic soldier on either of the three above mentioned grounds, the military authorities shall, as in the case of refusal by a Roman Catholic Priest, make proper arrangements for the decent interment of the corpse;

3*rdly*, that whenever, with or without furnishing any explanation of his reasons, a Roman Catholic Priest paid by the State or a Protestant Chaplain refuses to perform the funeral rites of his Church over the body of a deceased Roman Catholic soldier, the circumstances of the case should be fully reported by the military authorities for the consideration and orders of the Government of India.

2. The Governor General in Council is accordingly pleased to direct the modification in the above sense of the provisions of paragraphs 15 to 19 inclusive of the Resolution, 8th September 1875.

The 2nd August 1880.

No. 81.—The Chief Commissioner will receive Native gentlemen who wish to see him every Friday morning between the hours of 8 and 9 at Government House.

Gentlemen intending to call are requested to send their cards the day before, to the Secretary in the General Department.

No. 82.—Mr. C. Madaiya, Revenue Assistant Commissioner, delivered over, and Mr. V. P. Madhava Rao, B. A., Subordinate Judge, received, charge of the Hassan District Treasury, on the afternoon of the 23rd July 1880.

The 3rd August 1880.

No. 83.—S. R. Subbarayar, B. A., Munsiff of Seringapatam, is invested with the powers of a Magistrate of the 3rd Class, together with the additional powers referred to in Section 23 of the Code of Criminal Procedure, to be exercised in the Taluks of Ashtagram, Mandya and Malvalli of the Mysore District and in the Taluk of Nagamangala in the Hassan District.

The 5th August 1880.

No. 84.—Mr. Abdul Rahiman, Assistant Commissioner, Shimoga District, is granted privilege leave of absence for six weeks, under Section 44 of the Civil Leave Code, from such date as he may avail himself of it.

By Order,

W. J. CUNINGHAM,
Secretary.

REVENUE DEPARTMENT.

NOTIFICATION.

The 26th July 1880.

No. 41.—It is hereby notified for public information that all the rights of the present jodidars in the undermentioned jodi village, which has been duly attached in satisfaction of the arrears of revenue due to Government by the said jodidars, will be sold by public auction at the Deputy Commissioner's Office at Chitaldroog, on Thursday the 2nd September 1880, before the Deputy Commissioner, or, in his absence, before the Assistant Commissioner present. The sale will commence at 11 A. M. on that date and the village will be knocked down to the highest bidder without reserve.

2. Purchaser will be required to deposit 25 per cent of the purchase money at the time of sale, and where the remainder of the purchase money may not be paid within 15 days from the day of sale, the money so deposited shall be liable to forfeiture.

3. When such deposit shall not be made, nor the remaining purchase money paid up, the lands shall be re-sold at the expense and risk of the first purchaser.

4. Persons bidding at the sale may be required to state whether they bid on their own account or as agents, and in the latter case to deposit a written authority signed by their principals, otherwise their bids may be rejected.

5. The sale shall be stayed, if the defaulter, or any other person acting on his behalf or claiming an interest in the land, tenders the full amount of the arrears of revenue with the interest and other charges, provided such tender be made before sunset on the day previous to that appointed for the sale.

6. The sale of the property will not become absolute until the sale has been confirmed by the Chief Commissioner.

7. Purchasers having completed the payment of the purchase money will, as soon as the sale has been confirmed by the Chief Commissioner, be placed in immediate possession, and the village will be registered in the name of the purchaser, and a certificate of sale signed and sealed by the Deputy Commissioner will be granted to him. It is to be distinctly understood that the Government are not responsible for errors of description or in estimated extent.

8. Provided parties deeming themselves aggrieved by the sale shall be at liberty to appeal to the Chief Commissioner within 30 days from the day of sale, and the purchase shall be conditional on the final order in such appeal.

Taluk.	Village.	Name of Jodidar.	Boundaries of the Village.	Estimated Extent.	Estimated Gross Rental or Beriz.	Annual Quit-Rent (excluding local and irrigation cesses) payable to Government.	Arrears of Government Revenue including Local Cess for which Village is to be sold.			
							Years.	Amount.		
Hosdurga.	Malali.	Putta Bhatt and 4 others.	Bounded on the north by Pilapura, on the south Kondaji and Kangolli villages, on the east Sangenhalli, Machanahalli, and Channasamudra, on the west Nirgunta.	A. 434 G. 23.	256—15—3.	253—1—0.	1876—77...	177	0	9
							1877—78...	147	0	7
							1878—79...	196	0	9
							1879—80...	137	1	0
							Total...	657	3	1

By Order,

C. RANGACHARLU,
Revenue Secretary.

Notifications, &c., by the Government of India.

DEPARTMENT OF FINANCE AND COMMERCE.

NOTIFICATION.

Simla, the 17th July 1880.

No. 1826.—In exercise of the powers vested in him by Section 20 of the Post Office Act of 1866, the Governor General in Council is pleased to reduce the postage charge on inland parcels not exceeding 20 tolas in weight from 8 annas to 4 annas.

The present and revised rates are given below :—

Present scale of rates for inland parcels.

Not exceeding 40 tolas in weight	...	8 annas.
For every additional 40 tolas	...	4 „

Revised scale of rates for inland parcels.

Not exceeding 20 tolas in weight	...	4 annas.
Exceeding 20 tolas and not exceeding 40 tolas	...	8 „
For every additional 40 tolas	...	4 „

The new scale of rates will apply to inland parcels posted on or after the 15th August 1880.

R. B. CHAPMAN,
Secretary to the Govt. of India.

Proceedings of the Chief Commissioner of Mysore in the Revenue Department, (Revenue),—dated 10th July 1880.

READ—

Letter from the Deputy Commissioner of the Shimoga District, No. 328, dated 15th March 1880, submitting for orders under Section 45 of the Stamp Act I of 1879, two unstamped documents in which the value of the property involved is not specified and enquiring whether the procedure adopted by him of ascertaining the same through the Amildar is correct.

No. 2092-9—R. 387, DATED BANGALORE, 10TH JULY 1880.

ORDER THEREON.—Section 27 of the Indian Stamp Act I of 1879 requires that all facts and circumstances necessary to determine the amount of the stamp duty leviable should be fully and truly set forth. Failure to comply with this provision, if resulting from intent to defraud the Government of any duty, will be punishable under Section 63 of the Act; but such failure often proceeds from ignorance especially in the case of partition deeds like the one under notice, relating to sundry properties of small value, in which parties may not see occasion to fix a money value on the property. In such cases, an affidavit or other evidence may be taken in the manner provided in Section 30 in regard to the value of the property, and the stamp duty levied with reference to it and noted on the document. Until the necessary information is thus furnished by the parties concerned, the document will remain impounded.

READ—

Letter No. 79 of the 8th June 1880, from the Deputy Commissioner of Túmkúr, soliciting orders in regard to the stamp duty leviable on a certificate of sale granted by the Túmkúr Munsiff, in which three properties are conveyed for three different considerations.

No. 2155-63—R. 395, DATED BANGALORE, 10TH JULY 1880.

ORDER THEREON.—The question is not whether there were different considerations for the three properties sold by the Munsiff and for which he issued a single sale certificate, but rather whether they were separate sales; in which case they must be regarded as constituting distinct matters under Section 7 of the new Stamp Act, and charged with separate stamp duty on the value of each sale. The transactions need not necessarily consist of different kinds of contract in order to constitute distinct matters.

READ—

Letter from the Deputy Commissioner of the Shimoga District, No. 75 of the 13th May 1880, soliciting instructions as to the amount of stamp duty leviable on a deed of sale conveying several articles for distinct considerations.

No. 2076-85—REV. 383, DATED BANGALORE, 10TH JULY 1880.

ORDER THEREON.—Section 7 of the present Stamp Act I of 1879, which is very differently worded from Section 14 of the old Act, seems to the Chief Commissioner to be sufficiently explicit. An instrument conveying by sale several articles can be subjected to a separate charge of stamp duty on the value of each of the articles, only if the sale of each such article formed a distinct and separate transaction so as to constitute a "distinct matter" under the Act. But the sale of several articles in a single transaction or engagement, *i. e.*, by a single sale, though the price of each article may be separately specified in the instrument, cannot be regarded as comprising several distinct matters, and must therefore be charged with a stamp duty on the aggregate amount of the sale, such sale constituting but a single cause of action.

32

READ—

Letter from the Deputy Commissioner of the Túmkúr District, No. 45 of the 11th May 1880, requesting instructions as to whether under the new Stamp Act I of 1879, any stamp is required for acceptance of transfer of occupancy of lands.

No. 2122-30—R. 391, DATED BANGALORE, 12TH JULY 1880.

ORDER THEREON.—Acceptance of transfers of occupancy of lands in settled taluks in Form No. II prescribed in the Survey Manual, for which a stamp of 8 annas was required to be levied under Article 11 of Schedule II of the old Stamp Act XVIII of 1869, will hereafter be exempt from the stamp duty under Article 2, Clause (*e*) of Schedule II of the new Stamp Act I of 1879. This exemption, however, is limited by the wording of the Act to settled taluks coming under Bombay Act I of 1865. In the unsurveyed taluks, documents of the above description being of the nature of agreements to pay the arrears of revenue due on the lands acquired by the transfer, must continue subject to the stamp duty of 8 annas under Article 5 (*c*) of the new Stamp Act, unless the duty is hereafter remitted by the Government of India under Section 8 of the Act. These documents will not strictly fall under the head of counterparts of leases exempted from the Stamp Act, nor under Clause 9, Section 19, of the Court Fees' Act, or Article 1 (*a*) of Schedule II of the said Act.

C. RANGACHARLU,
Revenue Secretary.

List of Papers placed at the disposal of the Press.

No.	No. of Letters.	Date.	Subject.
1	2709—724 ...	16th July 1880...	Reviewing the Annual Report on Vaccination in Mysore, for 1879—80.
2	2692—385 ...	17th do ...	Passing orders relative to the levy of Municipal house-tax on Government Anche houses.
3	2895—51 ...	22nd do ...	Issuing instructions relative to the Public Prosecutors engaging in private criminal practice.
4	3115—54 ...	29th do ...	Appointing officers in whose presence a search for fire-arms, &c., under Act XI of 1878, shall be made.

THE

MYSORE GAZETTE.

No. 32 Published by Authority. of 1880.

BANGALORE, SATURDAY, AUGUST 14, 1880.

☞ Separate paging is given to this Part in order that it may be filed as a separate compilation.

CONTENTS.

	PAGE.
PART I.—Notifications by the Chief Commissioner of Mysore and Coorg.—Notifications by the Government of India...	213—216
PART II.—Notifications, &c., by the Judicial Commissioner; Survey and Settlement Commissioner; Superintendent of Inam Settlements; Deputy Accountant General; Public Works Officers; Military Assistant; Inspector General of Registration; Director of Public Instruction; Deputy Surgeon General of Hospitals; Anche Bakshi; President of the Municipal Boards; District and Sessions Judges; Deputy Commissioners of Districts.—Season Reports; Meteorological Registers; Postal Notices, &c.	431—442
PART III.—Acts and Bills of the Governor General of India in Council, &c. A Bill to exempt certain persons and property from Municipal taxation	43
PART IV.—Miscellaneous Papers	Nil.
SUPPLEMENT.—Abstract of Season or Intermediate Reports, &c	i

PART I.

Notifications by the Chief Commissioner of Mysore.

GENERAL DEPARTMENT.

NOTIFICATIONS.

The 2nd August 1880.

No. 81.—The Chief Commissioner will receive Native gentlemen who wish to see him every Friday morning between the hours of 8 and 9 at Government House.

Gentlemen intending to call are requested to send their cards the day before, to the Secretary in the General Department.

The 11th August 1880.

No. 85.—The following letter from the Government of India, Foreign Department, is published for general information, in continuation of the Chief Commissioner's Notifications Nos. 292 and 297, dated 17th and 26th February 1880, respectively.

From the Assistant Secretary to the Government of India, Foreign Department, To the Chief Commissioner of Mysore, General, No. 800 I-J., dated Simla, the 30th July 1880.

I am directed to acknowledge your Secretary's letter No. 1711—G. 26, dated 8th June 1880.

2. In reply, I am to say that, in modification of the prohibition respecting Military stores contained in paragraph 3 of the letter from this Office No. 29, I. P., dated 7th January last, the Government of India are pleased specially to invest the Chief Commissioner of Mysore, for the time being, with the power of granting licenses for the export of sulphur from British India into Mysore.

The 12th August 1880.

No. 86.—The following Resolution of the Government of India in the Department of Finance and Commerce, relative to the administration of Government Savings' Banks in Mysore, is published for general information, in modification of Chief Commissioner's Notification No. 23, dated 27th April 1880.

Government of India, Department of Finance and Commerce, No. 1960, dated Simla, the 26th July 1880.

READ again—

Letter from the Foreign Department to the Chief Commissioner of Mysore, No. 22 I. F., dated the 29th March 1880, authorizing the extension with certain modifications of the rules for Government Savings' Banks to Mysore.

READ—

Letter from the Comptroller General No. 33, dated the 29th April 1880.

RESOLUTION.—In modification of previous orders the Governor General in Council directs that the rules published with Financial Resolution No. 909 of the 20th February 1880 shall be extended to Mysore with the following modifications :—

The words "Deputy Accountant General, Mysore," shall be read for the words "Comptroller General" wherever they occur, and in Rule III the words "Government of Mysore" shall be read for the words "Government of India." The Deputy Accountant General, Mysore, should arrange with the Accountant General, Madras, as an agent for the requisite purchase and sale of Government securities under Rule VIII.

The 9th August 1880.

No. 87.—Mr. P. N. Púrnaiya, B. A., Revenue Assistant Commissioner, Mysore District, availed himself of the privilege leave granted to him in Chief Commissioner's Notification No. 79, dated 30th July 1880, on the afternoon of the 4th instant.

The 11th August 1880.

No. 88.—Mr. V. P. Madhava Rao, B. A., Subordinate Judge, Hassan District, is granted privilege leave of absence for fifteen days, under Section 44 of the Civil Leave Code, with effect from the 23rd instant, or from such date as he may avail himself of it.

By Order,

W. J. CUNINGHAM,
Secretary.

REVENUE DEPARTMENT.

NOTIFICATIONS.

The 26th July 1880.

No. 41.—It is hereby notified for public information that all the rights of the present jodidars in the undermentioned jodi village, which has been duly attached in satisfaction of the arrears of revenue due to Government by the said jodidars, will be sold by public auction at the Deputy Commissioner's Office at Chitaldroog, on Thursday the 2nd September 1880, before the Deputy Commissioner, or, in his absence, before the Assistant Commissioner present. The sale will commence at 11 A. M. on that date and the village will be knocked down to the highest bidder without reserve.

2. Purchaser will be required to deposit 25 per cent of the purchase money at the time of sale, and where the remainder of the purchase money may not be paid within 15 days from the day of sale, the money so deposited shall be liable to forfeiture.

3. When such deposit shall not be made, nor the remaining purchase money paid up, the lands shall be re-sold at the expense and risk of the first purchaser.

4. Persons bidding at the sale may be required to state whether they bid on their own account or as agents, and in the latter case to deposit a written authority signed by their principals, otherwise their bids may be rejected.

5. The sale shall be stayed, if the defaulter, or any other person acting on his behalf or claiming an interest in the land, tenders the full amount of the arrears of revenue with the interest and other charges, provided such tender be made before sunset on the day previous to that appointed for the sale.

6. The sale of the property will not become absolute until the sale has been confirmed by the Chief Commissioner.

7. Purchasers having completed the payment of the purchase money will, as soon as the sale has been confirmed by the Chief Commissioner, be placed in immediate possession, and the village will be registered in the name of the purchaser, and a certificate of sale signed and sealed by the Deputy Commissioner will be granted to him. It is to be distinctly understood that the Government are not responsible for errors of description or in estimated extent.

8. Provided parties deeming themselves aggrieved by the sale shall be at liberty to appeal to the Chief Commissioner within 30 days from the day of sale, and the purchase shall be conditional on the final order in such appeal.

Taluk.	Village.	Name of Jodidar.	Boundaries of the Village.	Estimated Extent.	Estimated Gross Rental or Beriz.	Annual Quit-Rent (excluding local and irrigation cesses) payable to Government.	Arrears of Government Revenue including Local Cess for which Village is to be sold.			
							Years.	Amount.		
Hosdurga.	Malali.	Putta Bhatt and 4 others.	Bounded on the north by Pilapura, on the south Kondaji and Kangolli villages, on the east Sangenhalli, Machanahalli, and Channasamudra, on the west Nirgunta.	A. 434 G. 23.	256—15—3.	253—1—0.	1876—77...	177	0	9
							1877—78...	147	0	7
							1878—79...	196	0	9
							1879—80...	137	1	0
							Total...	657	3	1

The 12th August 1880.

No. 45.—Gangaiya, Amildar of the Maddagiri Taluk, has been granted six days' privilege leave from the 3rd August 1880.

No. 46.—Krishnaiengar, Amildar of the Chitaldroog Taluk, is granted an extension of 17 days' privilege leave in continuation of the four weeks' leave granted in Notification No. 33, dated 28th June 1880.

By Order,

C. RANGACHARLU,
Revenue Secretary.

PUBLIC WORKS DEPARTMENT.

NOTIFICATION.

The 10th August 1880.

No. 22.—The following passed students of the School of Engineering and Natural Science, Bangalore, who have been appointed to this Department as Apprentice Engineers, are posted to the Divisions noted below :—

Mr. D. Sitaram .. .. .. Hassan Division.
Mr. D. Ranga Rao .. .. .. Shimoga do.

By Order,

W. R. JOHNSON, *Lieut.-Col.,*
Secretary, P. W. D.

Notifications, &c., by the Government of India.

FOREIGN DEPARTMENT.

NOTIFICATION.

JUDICIAL.

Simla, the 6th August 1880.

No. 126-*I.-J.*—With effect from the 1st April 1880, His Excellency the Viceroy and Governor General in Council sanctions the addition to paragraph 65 of the Municipal Regulations in force in Bangalore :—After the words "buildings set apart for the personal occupation of His Highness the Maha Raja of Mysore," of the words "*and the Bangalore Government Museum*."

A. C. LYALL,
Secy. to the Govt. of India.

THE

MYSORE GAZETTE.

No. 33 Published by Authority. of 1880.

BANGALORE, SATURDAY, AUGUST 21, 1880.

☞ Separate paging is given to this Part in order that it may be filed as a separate compilation

CONTENTS.

	PAGE.
PART I.—Notifications by the Chief Commissioner of Mysore and Coorg.—Notifications by the Government of India...	217—219
PART II.—Notifications, &c., by the Judicial Commissioner; Survey and Settlement Commissioner; Superintendent of Inam Settlements; Deputy Accountant General; Public Works Officers; Military Assistant; Inspector General of Registration; Director of Public Instruction; Deputy Surgeon General of Hospitals; Anche Bakshi; President of the Municipal Boards; District and Sessions Judges; Deputy Commissioners of Districts.—Season Reports; Meteorological Registers; Postal Notices, &c.	443—448
PART III.—Acts and Bills of the Governor General of India in Council, &c. A Bill to exempt certain persons and property from Municipal taxation	45
PART IV.—Miscellaneous Papers	Nil.
SUPPLEMENT.—Abstract of Season or Intermediate Reports, &c.	1—2

PART I.

Notifications by the Chief Commissioner of Mysore.

GENERAL DEPARTMENT.

NOTIFICATION.

The 2nd August 1880.

No. 81.—The Chief Commissioner will receive Native gentlemen who wish to see him every Friday morning between the hours of 8 and 9 at Government House.

Gentlemen intending to call are requested to send their cards the day before, to the Secretary in the General Department.

By Order,

W. J. CUNINGHAM,
Secretary.

Notifications by the Chief Commissioner of Coorg.

GENERAL.

NOTIFICTION.

The 18th August 1880.

No. 12.—The following amended Bye-law No. 1 for the Mercara Municipality having been sanctioned by the Chief Commissioner, is published for general information.

1. Ordinary meetings of the Municipal Board will be held at 3 P. M. on the 15th day of the month, or the 1st office day after that provided it be not a Friday.

* * * * * *

By Order,

W. J. CUNINGHAM,
Secretary.

Notifications, &c., by the Government of India.

DEPARTMENT OF FINANCE AND COMMERCE.

NOTIFICATION.

Simla, 7th August 1880.

No. 2112.

* * * * *

RESOLUTION.—The Governor General in Council is pleased to lay down the following in supersession of all existing rules for the grant of travelling allowance to officers in civil employ for journeys by sea or on a river :—

I.—A free passage, or refund of passage-money, may be granted at the following rates to a public servant in the civil department when travelling by sea or in a river steamer, if he would be entitled to draw travelling allowance if he were travelling on land.

II.—For the purposes of these rules—

(1). Marine officers include officers of the Marine Department holding appointments afloat or in dockyards, but not port officers, and are divided into four grades—

1*st.*—Commanders of vessels and Superintendents of Dockyards.

2*nd.*—Other Executive officers, gazetted clerks, and engineers.

3*rd.*—Warrant officers, non-gazetted clerks, gunners, and European employés.

4*th.*—All others.

(2) Officers in civil employ are divided into three classes—

1*st.*—Covenanted civil servants, commissioned military officers, the port officers mentioned in the margin, marine officers of the 1st and 2nd grades, and other uncovenanted officers with rank not lower than that of extra assistant commissioner, deputy magistrate, or deputy collector, or with salary not less than Rs. 200 a month.

The port officers of Calcutta, Madras, Bombay, Rangoon, Karachi, Aden, Akyab, and Moulmein.
The deputy port officers at Calcutta and Madras.
The first assistant port officers at Calcutta, Madras, and Bombay.
The second assistant port officer at Madras.
The conservator, river Indus.

2*nd.*—Marine officers of the 3rd grade, warrant officers, non-commissioned military officers, European soldiers, and uncovenanted servants in superior service as defined in the Civil Pension Code, with the exception (1) of those included in the first class ; and (2) of those on monthly salaries of less than Rs. 30, who ought, in the opinion of the heads of their offices, to belong to the third class.

3*rd.*—All other officers.

III.—An officer of the first class is entitled—

(*a*) to free passage for himself or refund of passage-money at first class rates ;

(*b*) to free passage or refund of passage-money at lowest class rates for two, or, if his salary is not less than Rs. 1,000, for three servants ;

(*c*) to the freight of such horses and tents as he would have been entitled to carry at the public expense had he been travelling by railway.

IV.—An officer of the second class is entitled to—

(*a*) a free passage for himself, or refund of passage-money at middle or second class rates ;

(*b*) a free passage, or refund of passage-money at lowest class rates, for one servant.

V.—An officer of the third class is entitled—

(*a*) to a free passage for himself, or refund of passage-money at lowest or third class rates.

VI.—Except as provided in Rule III, (*c*), no more personal luggage can be carried at the expense of the State by an officer than the quantity, the freight on which, by custom, is included in the charge for passage.

VII.—If board is provided on the vessel either by its owners or its commander, table-money is recovered from an officer of the first class at the following rates for every day on which dinner is provided for him on board :—

(*a*).—If the board includes wines and liquors, three-twentieths of salary up to a maximum of Rs. 8.
(*b*).—If the board does not include wines and liquors, three-fortieths of salary up to a maximum of Rs. 4.

Provided that—

(1) table-money shall not be recovered from a native of India compelled by caste or other scruples to make separate arrangements for his board ;

(2) an uncovenanted medical officer travelling between Calcutta and Port Blair in charge of convicts, is entitled to a free mess not including wine or beer ;

(3) a marine officer travelling on an Indian Government vessel will join the mess and pay the usual contribution ;

(4) a marine officer, who is entitled to free rations and is proceeding from one appointment to another in both of which he is messed will, if the charge for messing is included in the charge for passage, be allowed a free mess. If the messing is a separate charge, he will be reimbursed his actual messing expenses (exclusive of wines and beer) up to a limit of Rs. 4 a day.

VIII.—Table-money is not recovered from officers of the second and third classes. If such an officer makes his own arrangements for messing, he is entitled to table-money at the rate of three-tenths of salary, but not exceeding Rs. 3 and not less than 4 annas for every day on which he dines on board.

Provided that—

(*a*) a second class passenger is not entitled to be supplied at the public expense with first class mess, *i. e.*, with mess at the commander's table, unless no other mess is provided on the steamer ;

(*b*) a port officer on detached duty or a warrant medical officer sent from Calcutta to Port Blair in charge of convicts during his voyage to or from Port Blair is not entitled to wine or beer.

IX.—The families of officers of the second class are conveyed at the public expense. Table-money under Rule VIII will be paid at full rates for those members of the family of such an officer who are not less than six years of age, and at half-rates for other members ; but a passage will not be provided for more servants than the officer may take with himself under these rules when travelling alone.

X.—The foregoing rules do not apply to an officer, other than a marine officer as provided in the 3rd proviso to Rule VII, travelling, otherwise than on payment of passage-money, in any vessel the cost of which is borne from imperial, provincial, or local funds. Such an officer is not, without the special sanction of the Government of India, entitled to any travelling allowance unless he can certify that he has, during the voyage, incurred actual personal travelling expenses, in which case he may recover the actual sum which he has so incurred not exceeding the amount of the daily or monthly travelling allowance to which he would have been entitled for the period of the voyage if, during that period, he had travelled by land.

ORDERED, that the foregoing Resolution be published in the *Gazette of India* and communicated to the other Departments of the Government of India, to all Local Governments and Administrations, to the Comptroller General and Head Commissioner of Paper Currency, to other Chiefs of Departments administered by the Government of India in the Department of Finance and Commerce, to all Accountants General and to Deputy Accountants General in independent charge.

R. B. CHAPMAN,
Secretary to the Govt. of India.

THE

MYSORE GAZETTE.

No. 34 Published by Authority. of 1880.

BANGALORE, SATURDAY, AUGUST 28, 1880.

☞ Separate paging is given to this Part in order that it may be filed as a separate compilation.

CONTENTS.

	PAGE.
PART I.—Notifications by the Chief Commissioner of Mysore and Coorg.—Notifications by the Government of India...	221—225
PART II.—Notifications, &c., by the Judicial Commissioner; Survey and Settlement Commissioner; Superintendent of Inam Settlements; Deputy Accountant General; Public Works Officers; Military Assistant; Inspector General of Registration; Director of Public Instruction; Deputy Surgeon General of Hospitals; Anche Bakshi; President of the Bangalore Municipal Boards; District and Sessions Judges; Deputy Commissioners of Districts.—Season Reports; Meteorological Registers; Postal Notices, &c.	449—457
PART III.—Acts and Bills of the Governor General of India in Council, &c. A Bill to exempt certain persons and property from Municipal taxation	47
PART IV.—Miscellaneous Papers	Nil.
SUPPLEMENT.—Abstract of Season or Intermediate Reports, &c.	1—2

PART I.

Notifications by the Chief Commissioner of Mysore.

GENERAL DEPARTMENT.

NOTIFICATIONS.

The 2nd August 1880.

No. 81.—The Chief Commissioner will receive Native gentlemen who wish to see him every Friday morning between the hours of 8 and 9 at Government House.

Gentlemen intending to call are requested to send their cards the day before, to the Secretary in the General Department.

The 21st August 1880.

No. 89.—The following appointments in the Grade of Munsiffs are ordered in substitution for that made in Chief Commissioner's Notification No. 78, dated 30th July 1880, which is hereby cancelled :—

Mr. N. Krishna Rao, M. A., Attaché, Mysore Commission, to be a Munsiff of the 3rd Grade, *vice* Mr. J. W. Knight, appointed an *extra* Munsiff of the 2nd Grade.

C. Subba Rao, Judicial Head Munshi, Deputy Commissioner's Office, Shimoga District, to act as Munsiff, 3rd Grade, at Húnsúr, during the absence of N. Krishna Rao, M. A., on other duty, or until further orders.

The 24th August 1880.

No. 90.—Mr. N. Venkat Rao, Attaché, Túmkúr District, is granted leave on medical certificate for fifteen days, under Section 4, Supplement F of the Civil Leave Code, in extension of that sanctioned n Chief Commissioner's Notification No. 74, dated 23rd July 1880.

By Order,

W. J. CUNINGHAM,
Secretary.

REVENUE DEPARTMENT.

NOTIFICATIONS.

The 24th August 1880.

No. 47.—It is hereby notified for public information that all the rights of the present jodidars in the undermentioned jodi villages, which have been duly attached in satisfaction of the arrears of revenue due to Government (as shewn in the subjoined statement), by the said jodidars, will be sold by public auction at the places and on the dates mentioned in the annexed statement. The sale will commence at 11 A. M. on the dates specified and the villages will be knocked down to the highest bidder without reserve.

2. Purchaser will be required to deposit 25 per cent of the purchase money at the time of sale, and where the remainder of the purchase money may not be paid within 15 days from the day of sale, the money so deposited shall be liable to forfeiture.

3. When such deposit shall not be made nor the remaining purchase money paid up, the lands shall be re-sold at the expense and risk of the first purchaser.

4. Persons bidding at the sale may be required to state whether they bid on their own account or as agents, and in the latter case to deposit a written authority signed by their principals, otherwise their bids may be rejected.

5. The sale shall be stayed, if the defaulter, or any other person acting in his behalf or claiming an interest in the land, tenders the full amount of the arrears of revenue with the interest and other charges, provided such tender be made before sunset on the day previous to that appointed for the sale.

6. The sale of the property will not become absolute until the sale has been confirmed by the Chief Commissioner.

7. Purchasers having completed the payment of the purchase money will, as soon as the sale has been confirmed by the Chief Commissioner, be placed in immediate possession and the village will be registered in the name of the purchaser, and a certificate of sale signed and sealed by the Deputy Commissioner will be granted to him. It is to be distinctly understood that the Government are not responsible for errors of description and in estimated extent.

8. Provided parties deeming themselves aggrieved by the sale shall be at liberty to appeal to the Chief Commissioner within thirty days from the day of sale, and the purchase shall be conditional on the final order in such appeal.

District.	Taluk.	Hobli.	Village.	Names of Jodidars.	Boundaries of the Village.	Estimated Extent.	Estimated Gross Rental or Beriz.	Quit-Rent payable annually to Government.	Arrears of Government Revenue for which Village is to be sold.				Date of Sale, &c.
									Years.	Amount.			
										Rs.	A.	P.	
Bangalore.	Bangalore.	Begur.	Kammanahalli.	Venkatesa Shastri and others.	Bounded on the north by Hulimavu, on the south Basavanapura and Hommadevanhalli, on the east Yalenahalli, and on the west Gottigere.	Kandis 45.	...	Rs. 397—5—6.	Bahudhanya.	125	15	2	3rd September 1880, at the Taluk Office, Bangalore.

District.	Taluk.	Hobli.	Village.	Names of Jodidars.	Boundaries of the Village.	Estimated Extent.	Estimated Gross Rental or Beriz.	Quit-Rent payable annually to Government.	Arrears of Government Revenue for which Village is to be sold. Years.	Amount.			Date of Sale, &c.
Bangalore.	Hoskote.	Mugalur.	Signayakanhalli.	Narsinga Rao on behalf of Appu Rao of Bangalore.	Bounded on the north by the river Dakshina Pinakini and Bilakere village, on the south Jodi Madappanahalli, on the east the river Daskhina Pinakini, and on the west Bilakere of the Bangalore Taluk.	K. 11 P. 15.	37—3—10.	35—0—0.	Dhatu ...	31	2	9	3rd September 1880, at the village before the Amildar.
									Iswara ...	36	2	9	
									Bahudhanya	36	2	9	
									Pramadi ...	37	5	4	
									Total.....	140	13	7	
Kolar.	Goribidnur.	Varavani.	Nerlahalli.	Kalyani Venkobachari & 10 others.	Bounded on the north by Bilenahalli and Bandaralahalli, on the south Halehalli, on the east Halehalli, and on the west Chikarasahalli and Dyavarahalli.	K. 110, C. 6, P. $2\frac{1}{8}$.	399—0—11.	99—1—10.	Dhatu ...	69	9	11	27th Sept. 1880, at the Taluk Office, before the Amildar.
									Iswara ...	86	9	11	
									Bahudhanya	89	9	11	
									Pramadi ...	99	1	10	
									Total.....	344	15	7	
	Goribidnur.	Varavani.	Belanahalli.	Subbannachari.	Bounded on the north by Upparahalli, on the south Halehalli, on the east Halehalli, and on the west Mindenahalli.	K. 26, C. 12, P. $3\frac{7}{8}$.	67—0—0.	65—3—0.	Dhatu ...	55	1	6	25th September 1880, at the Taluk Office, before the Amildar.
									Iswara ...	63	1	6	
									Bahudhanya	63	1	6	
									Pramadi ...	65	3	0	
									Total...	246	7	6	

The 25th August 1880.

No. 48.—M. Srinivasaiengar, Revenue Head Accountant, Chitaldroog Deputy Commissioner's Office, is appointed to act as Amildar and 3rd Class Magistrate of the Chitaldroog Taluk, during the absence of Krishnaiengar on privilege leave, or until further orders.

By Order,

C. RANGACHARLU,
Revenue Secretary.

Notifications by the Chief Commissioner of Coorg.

GENERAL.

NOTIFICATION.

The 27th August 1880.

No. 13.—The following Bye-laws for the Mercara Municipality having been approved of by the Chief Commissioner, are published for general information :—

Remission on account of vacant houses.

When any house shall have been vacant for sixty consecutive days during any year, the Subedar of Mahadeopet shall remit so much of the rate of that year, as may be proportionate to the number of days the said house may have remained unoccupied, provided that the owner of such house or his agent shall have given to the Subedar of Mahadeopet notice in writing of the vacancy thereof, and that the amount of rate to be remitted shall be calculated from the date of the delivery of such notice.

Power to make and improve streets and close them, &c.

The President, with the sanction of the Chief Commissioner, may lay out and make new streets and may build and construct bridges and tunnels, and may turn, divert, discontinue or close any public streets and may widen, open, enlarge or otherwise improve any such street; making due compensation to the owners and occupiers of any land or buildings which may be required for any such purposes.

By Order,

W. J. CUNINGHAM,
Secretary.

Proceedings of the Chief Commissioner of Mysore, Public Works Department, 23rd August 1880.

Read the following report, dated 5th August 1880, by the Judges, on the Flower Show held at the Lal-Bagh on Monday the 2nd idem :—

The ferns and foliage plants exhibited were good. They were in great variety and shewed skill and care in growth. Some specimens of ferns were so well grown, so graceful and luxuriant that two extra prizes were awarded for special culture.

The standard roses were very fair, but perhaps from unfavorable weather, or lateness in season, they were not quite up to exhibition form. The trees exhibited signs of unequal growth and the blooms were scarcely well developed, or satisfactory in form.

The dwarf roses exhibited were strong and well grown, and in good bloom; but there was a want of variety in this kind.

The geraniums, both single and double, were excellent. The varieties were many, the plants vigorous and the blossoms good in shape and colors.

For the rest however, (chiefly annuals) it must be said that they were scarcely up to the standard of prize or "Show" plants of their kind, though there were many good individual specimens. Also it must be said that prizes were given in some cases more to encourage the grower than in appreciation of the merits of the plant. Except in roses and geraniums, there was rather a want of competition, which was no doubt owing to the unpreparedness of growers.

The cut flowers were scarcely up to the mark, and no prize was awarded for this. Some of those in vases, for competition as bouquets, were good and very tastefully arranged.

The hand bouquets were fair, but except in one or two instances, wanting in skill in construction as well as harmonious arrangement.

Many cut specimens lost much of their effect and *value* from want of skill in exhibition, and this was particularly evident in the case of the roses.

In some instances it was not stated for what prize competition was made.

Fruit and Vegetables.

The collections of fruit were good in some kinds, but not in general variety. Apples were excellent. Raspberries, guavas, figs and cooking pears were good both in size and flavour, but beyond these the exhibits in this class were not specially fine. It was observed that prizes were offered for only four kinds of fruit, exclusive of a general collection, and on this account some extra awards were made where the exhibits were commendable and well grown.

The show of vegetables was fairly good, especially in peas, cauliflower and cabbage.

Potatoes were rather inferior.

We have to acknowledge with thanks the kind assistance of Mr. Story of the Madras Gardens in awarding prizes.

General Remarks.

Due allowance must be made for certain disadvantages and drawbacks under which this Show has been held, and considering these, it is encouraging to observe that there were so many exhibitors and that the quality of exhibits was on the whole so good.

There can be no doubt that, were it determined to hold another Show in January, and due notice were given of the date or proximate date, it would prove even much more successful.

As a Committee we would further beg to remark that the number of visitors to the gardens on that day is pleasing evidence of the popularity and interest taken in this Show, and is a most satisfactory indication that the kindness of the two gentlemen through whose liberality and encouragement it was mainly enabled to be held at this time, as well as the care and trouble of the exhibitors, were fully appreciated by the community.

No. 29, DATED BANGALORE, 23RD AUGUST 1880.

ORDER THEREON.—The Chief Commissioner thanks the Judges for their careful and practical report, and for the trouble taken by them in awarding prizes at the Show.

2. Another Show will be held during the first fortnight in January next, the precise date of which will be notified early in November.

To—Mr. L. Ricketts,
" " H. Hudson,
" " J. Henderson,
" " J. Cameron,
" " G. G. Brown,
} Judges.

W. R. JOHNSON, *Lieut.-Col.*,
Secretary P. W. D.

Notifications, &c., by the Government of India.

DEPARTMENT OF FINANCE AND COMMERCE.

NOTIFICATIONS.

Simla, 14th August 1880.

No. 2326.

READ—

Resolution by the Government of India in the Financial Department, No. 3556, dated 19th October 1877.

Resolution.—By this Resolution the Governor General in Council prescribed measures for preventing legal-tender copper coin from circulating at a discount in British India, Mysore and Berar.

In paragraph 5 His Excellency in Council directed that, if, notwithstanding the orders issued, legal-tender copper coin should, at any time or anywhere, circulate at a discount, the fact was to be immediately reported to the Local Government, and by the Local Government to the Government of India, "with full explanation of the causes of the phenomenon and of the measures taken to remedy the evil."

The Governor General in Council now further directs that the report prescribed in paragraph 5 shall be made whenever legal-tender copper coin may be found to circulate at a premium. The causes of its doing so, and the measures adopted to neutralize them, must also be stated.

Order.—Ordered that this Resolution be published in the *Gazette of India*, and communicated to the several Local Governments and Administrations, to the Comptroller General, and the several Accountants General and Deputy Accountants General in independent charge, and to the Mint Masters, Calcutta and Bombay.

No. 2329.—In exercise of the powers conferred by Section 8 of the Indian Stamp Act, 1879, the Governor General in Council has exempted from stamp duty agreements with Railway Companies or Administrations for the conveyance of goods and receipts given by such Companies or Administrations for fares for conveyance of passengers or goods, or both, or animals.

R. B. CHAPMAN,
Secretary to the Govt. of India.

THE

MYSORE GAZETTE.

No. 35 Published by Authority. of 1880.

BANGALORE, SATURDAY, SEPTEMBER 4, 1880.

☞ Separate paging is given to this Part in order that it may be filed as a separate compilation.

CONTENTS.

	PAGE.
PART I.—Notifications by the Chief Commissioner of Mysore and Coorg.—Notifications by the Government of India...	227—230
PART II.—Notifications, &c., by the Judicial Commissioner; Survey and Settlement Commissioner; Superintendent of Inam Settlements; Deputy Accountant General; Public Works Officers; Military Assistant; Inspector General of Registration; Director of Public Instruction; Deputy Surgeon General of Hospitals; Anche Bakshi; President of the Bangalore Municipal Boards; District and Sessions Judges; Deputy Commissioners of Districts.—Season Reports; Meteorological Registers; Postal Notices, &c.	459—467
PART III.—Acts and Bills of the Governor Genl. of India in Council, &c.	Nil
SUPPLEMENT.—Coffee-leaf disease	1—7
SECOND do Abstract of Season or Intermediate Reports, &c.	1—2

PART I.

Notifications by the Chief Commissioner of Mysore.

GENERAL DEPARTMENT.

NOTIFICATIONS.

The 2nd August 1880.

No. 82.—The Chief Commissioner will receive Native gentlemen who wish to see him every Friday morning between the hours of 8 and 9 at Government House:

Gentlemen intending to call are requested to send their cards the day before, to the Secretary in the General Department.

The 31st August 1880.

No. 91.—To meet the convenience of the public it has been arranged in assimilation with the practice obtaining in Imperial Post, that with effect from 1st October 1880 the sender of a registered letter will be furnished with an acknowledgment signed by the addressee on payment of one anna for postage.

2. The postage (1 anna) referred to above must be paid in addition to the postage and registration fee, otherwise payable for the registered letter. Thus a half a tola registered letter may be prepaid with 4½ annas if no acknowledgment of the addressee be required by the sender, and with 5½ annas if the addressee's acknowledgment is required.

3. When a sender desires an acknowledgment, it will be necessary for him to give his name and full address when the letter is registered.

4. The addressee's acknowledgment will be posted to the sender's address by the office where the registered letter is delivered. Should it not be received within a reasonable time, application should be made for it at the Anche Office.

5. The above does not apply to registered letters for places beyond the limits of Mysore.

The 30th August 1880.

No. 92.—Mr. K. Seshadri Iyer, B. A., & B. L., is granted 21 days' privilege leave of absence from the 8th September, or such date as he may avail himself of it.

Mr. E. Chitambram Iyer, Subordinate Judge, Túmkúr, is appointed to act as Deputy Commissioner during the absence of Mr. Seshadri Iyer, or until further orders.

Mr. A. Krishnasamaiengar, B. A., Munsiff of Túmkúr, is appointed to act as Subordinate Judge during the absence of Mr. Chitambram Iyer, or until further orders.

B. Srinivās Rao, Translator in the Judicial Commissioner's Office, is appointed to act as Munsiff at Túmkúr during the absence of Mr. Krishnasamaiengar, or until further orders.

No. 93.—Mr. V. P. Madhava Rao, B. A., Subordinate Judge, Hassan District, is granted privilege leave of absence for fifteen days, under Section 44 of the Civil Leave Code, in extension of that sanctioned in Chief Commissioner's Notification No. 88, dated 11th August 1880.

The 3rd September 1880.

No. 94.—With the approval of the Government of India, the Chief Commissioner is pleased to appoint Mr. Nanjundaraj Ars an Attaché in the Mysore Commission, with effect from the 1st August 1880, *vice* Mr. Baleraj Ars, deceased.

By Order,

W. J. CUNINGHAM,
Secretary.

REVENUE DEPARTMENT.

NOTIFICATIONS.

The 24th August 1880.

No. 47.—It is hereby notified for public information that all the rights of the present jodidars in the undermentioned jodi villages, which have been duly attached in satisfaction of the arrears of revenue due to Government (as shewn in the subjoined statement), by the said jodidars, will be sold by public auction at the places and on the dates mentioned in the annexed statement. The sale will commence at 11 A. M. on the dates specified and the villages will be knocked down to the highest bidder without reserve.

2. Purchaser will be required to deposit 25 per cent of the purchase money at the time of sale, and where the remainder of the purchase money may not be paid within 15 days from the day of sale, the money so deposited shall be liable to forfeiture.

3. When such deposit shall not be made nor the remaining purchase money paid up, the land shall be re-sold at the expense and risk of the first purchaser.

4. Persons bidding at the sale may be required to state whether they bid on their own account or as agents, and in the latter case to deposit a written authority signed by their principals, otherwise their bids may be rejected.

5. The sale shall be stayed, if the defaulter, or any other person acting in his behalf or claiming an interest in the land, tenders the full amount of the arrears of revenue with the interest and other charges, provided such tender be made before sunset on the day previous to that appointed for the sale

6. The sale of the property will not become absolute until the sale has been confirmed by the Chief Commissioner.

7. Purchasers having completed the payment of the purchase money will, as soon as the sale has been confirmed by the Chief Commissioner, be placed in immediate possession and the village will be registered in the name of the purchaser, and a certificate of sale signed and sealed by the Deputy Commissioner will be granted to him. It is to be distinctly understood that the Government are not responsible for errors of description and in estimated extent.

8. Provided parties deeming themselves aggrieved by the sale shall be at liberty to appeal to the Chief Commissioner within thirty days from the day of sale, and the purchase shall be conditional on the final order in such appeal.

District.	Taluk.	Hobli.	Village.	Names of Jodidars.	Boundaries of the Village.	Estimated Extent.	Estimated Gross Rental or Beriz.	Quit-Rent payable annually to Government.	Arrears of Government Revenue for which Village is to be sold.			Date of Sale, &c.
									Years.	Amount.		
*			*	*	*	*		*	*			
Kolar.	Goribidnur.	Varavani.	Nerlahalli.	Kalyani Venkobachari & 10 others.	Bounded on the north by Bilenahalli and Bandaralahalli, on the south Halehalli, on the east Halehalli, and on the west Chikarasahalli and Dyavarahalli.	K. 110, C. 6, P. 2 1/8.	399—0—11.	99—1—10.	Dhatu ...	69	9	11	27th Sept. 1880, at the Taluk Office, before the Amildar.
									Iswara ...	86	9	11	
									Bahudhanya	89	9	11	
									Pramadi ...	99	1	10	
									Total.....	344	15	7	
	Goribidnur.	Varavani.	Belanahalli.	Subbannachari.	Bounded on the north by Upparahalli, on the south Halehalli, on the east Halehalli, and on the west Mindenahalli.	K. 26, C. 12, P. 3 7/8.	67—0—0.	65—3—0.	Dhatu ...	55	1	6	25th September 1880, at the Taluk Office, before the Amildar.
									Iswara ...	63	1	6	
									Bahudhanya	63	1	6	
									Pramadi ...	65	3	0	
									Total...	246	7	6	

The 31st August 1880.

No. 49.—It is hereby notified for general information that the undermentioned villages at present attached to the Bendikere Magani in the Banavar Taluk of the Kadur District, are transferred to the Haranhalli Taluk of the Hassan District :—

1. Bendikere.
2. Mahomadpur.
3. Satanhalli.
4. Saidarhalli.
5. Chikkur.
6. Jajur.
7. Nagatihalli.
8. Kalnayakanhalli.
9. Layalapur.
10. Devagondanhalli.
11. Hiriyur.
12. Bairambadi.
13. Bisalhalli.
14. Lakkanhalli.
15. Gollarhalli.
16. Kanihalli.
17. Timmappaiyanhalli.
18. Timmashettihalli.
19. Hariharpur.
20. Bettadpur.

By Order,

C. RANGACHARLU,
Revenue Secretary.

Notifications, &c., by the Government of India.

PUBLIC WORKS DEPARTMENT.

NOTIFICATION.

Simla, the 17th August 1880.

No. 279.—The Governor General in Council is pleased to make the following promotions in the Engineer Establishment attached to Local Administrations, with effect from the 12th July 1880, *vice* Mr. E. L. Gilbert, deceased :—

* * * * *

II.—TEMPORARY.

From 1st Grade Assistant Engineer to 4th Grade Executive Engineer.

Mr. R. Warder, Mysore, *vice* Mr. Colquhoun, permanently promoted.

ALEX. FRASER, *Major-Genl., R. E.,*
Secy. to the Govt. of India.

THE

MYSORE GAZETTE.

No. 36 Published by Authority. of 1880.

BANGALORE, SATURDAY, SEPTEMBER 11, 1880.

☞ Separate paging is given to this Part in order that it may be filed as a separate compilation.

CONTENTS.

	PAGE.
PART I.—Notifications by the Chief Commissioner of Mysore and Coorg.—Notifications by the Government of India...	231—233
PART II.—Notifications, &c., by the Judicial Commissioner; Survey and Settlement Commissioner; Superintendent of Inam Settlements; Deputy Accountant General; Public Works Officers; Military Assistant; Inspector General of Registration; Director of Public Instruction; Deputy Surgeon General of Hospitals; Anche Bakshi; President of the Bangalore Municipal Boards; District and Sessions Judges; Deputy Commissioners of Districts.—Season Reports; Meteorological Registers; Postal Notices, &c.	469—482
PART III.—Acts and Bills of the Governor Genl. of India in Council, &c. The Petroleum Bill, 1880	49—58
PART IV.—Miscellaneous Papers	Nil.
SUPPLEMENT.—Abstract of Season or Intermediate Reports, &c.	

PART I.

Notifications by the Chief Commissioner of Mysore.

GENERAL DEPARTMENT.

NOTIFICATIONS.

The 2nd August 1880.

No. 81.—The Chief Commissioner will receive Native gentlemen who wish to see him every Friday morning between the hours of 8 and 9 at Government House.

Gentlemen intending to call are requested to send their cards the day before, to the Secretary in the General Department.

The 9th September 1880.

No. 95.—The annual examination of Assistant Commissioners will be held in the Public Offices at Bangalore and in the Commissioners' Offices at Mysore and Shimoga on the 25th October 1880, and following days:—

2. The test books prescribed for use are those specified in Notification No. 1, dated 7th April 1880.

3. Assistant Commissioners who wish to appear for the examination should send in their names at an early date through their immediate superior officers to the Secretary to the Chief Commissioner, General Department, before the 1st of October next.

By Order,

W. J. CUNINGHAM,
Secretary.

REVENUE DEPARTMENT.

NOTIFICATIONS.

The 24th August 1880.

No. 47.—It is hereby notified for public information that all the rights of the present jodidars in the undermentioned jodi villages, which have been duly attached in satisfaction of the arrears of revenue due to Government (as shewn in the subjoined statement), by the said jodidars, will be sold by public auction at the places and on the dates mentioned in the annexed statement. The sale will commence at 11 A. M. on the dates specified and the villages will be knocked down to the highest bidder without reserve.

2. Purchaser will be required to deposit 25 per cent of the purchase money at the time of sale, and where the remainder of the purchase money may not be paid within 15 days from the day of sale, the money so deposited shall be liable to forfeiture.

3. When such deposit shall not be made nor the remaining purchase money paid up, the lands shall be re-sold at the expense and risk of the first purchaser.

4. Persons bidding at the sale may be required to state whether they bid on their own account or as agents, and in the latter case to deposit a written authority signed by their principals, otherwise their bids may be rejected.

5. The sale shall be stayed, if the defaulter, or any other person acting in his behalf or claiming an interest in the land, tenders the full amount of the arrears of revenue with the interest and other charges, provided such tender be made before sunset on the day previous to that appointed for the sale.

6. The sale of the property will not become absolute until the sale has been confirmed by the Chief Commissioner.

7. Purchasers having completed the payment of the purchase money will, as soon as the sale has been confirmed by the Chief Commissioner, be placed in immediate possession and the village will be registered in the name of the purchaser, and a certificate of sale signed and sealed by the Deputy Commissioner will be granted to him. It is to be distinctly understood that the Government are not responsible for errors of description and in estimated extent.

8. Provided parties deeming themselves aggrieved by the sale shall be at liberty to appeal to the Chief Commissioner within thirty days from the day of sale, and the purchase shall be conditional on the final order in such appeal.

District.	Taluk.	Hobli.	Village.	Names of Jodidars.	Boundaries of the Village.	Estimated Extent.	Estimated Gross Rental or Beriz.	Quit-Rent payable annually to Government.	Arrears of Government Revenue for which Village is to be sold. Years.	Amount.			Date of Sale, &c.
*				*	*	*	*	*	*				
Kolar.	Goribidnur.	Varavani.	Nerlahalli.	Kalyani Venkobachari & 10 others.	Bounded on the north by Bilenahalli and Bandaralahalli, on the south Halehalli, on the east Halehalli, and on the west Chikarasahalli and Dyavarahalli.	K. 110, C. 6, P. $21\frac{7}{8}$.	399—0—11.	99—1—10.	Dhatu ... Iswara ... Bahudhanya Pramadi ... Total.....	69 86 89 99 344	9 9 9 1 15	11 11 11 10 7	27th Sept. 1880, at the Taluk Office, before the Amildar.
	Goribidnur.	Varavani.	Belanahalli.	Subbannachari.	Bounded on the north by Upparahalli, on the south Halehalli, on the east Halehalli, and on the west Mindenahalli.	K. 26, C. 12, P. $3\frac{7}{8}$.	67—0—0.	65—3—0.	Dhatu ... Iswara ... Bahudhanya Pramadi ... Total..	55 63 63 65 246	1 1 1 3 7	6 6 6 0 6	25th September 1880, at the Taluk Office, before the Amildar.

The 31st August 1880.

No. 49.—It is hereby notified for general information that the undermentioned villages at present attached to the Bendikere Magani in the Banavar Taluk of the Kadur District, are transferred to the Haranhalli Taluk of the Hassan District :—

1. Bendikere.	6. Jajur.	11. Hiriyur.	16. Kanihalli.
2. Mahomadpur.	7. Nagatihalli.	12. Bairambadi.	17. Timmappaiyanhalli.
3. Satanhalli.	8. Kalnayakanhalli.	13. Bisalhalli.	18. Timmashettihalli.
4. Saidarhalli.	9. Layalapur.	14. Lakkanhalli.	19. Hariharpur.
5. Chikkur.	10. Devagondanhalli.	15. Gollarhalli.	20. Bettadpur.

The 6th September 1880.

No. 50.—The Chief Commissioner is pleased to appoint Mr. H. W. Raikes of the Koppa Planters' Association and Ajjampur Sanna Devarappa to be Members of the Kadur District Fund Committee, *vice* Mr. Ross Porter and Kannaiya Naidu.

The appointment, made by the Deputy Commissioner, of Rayappa as a Member of the above Committee is confirmed.

By Order,

C. RANGACHARLU,
Revenue Secretary.

Notifications, &c., by the Government of India.

DEPARTMENT OF FINANCE AND COMMERCE.

NOTIFICATION.

Simla, the 4th September 1880.

No. 2642.—In supersession of the Resolution of the Government of India in this Department No. 1517, dated the 10th April 1879, the Governor General in Council has decided that in applying any rule which forbids the grant of travelling allowance in two forms for the same day, the day shall, in the absence of an order of the Government of India to the contrary, be held to be twenty-four consecutive hours.

R. B. CHAPMAN,
Secretary to the Govt. of India.

THE

MYSORE GAZETTE.

No. 37. Published by Authority. of 1880.

BANGALORE, SATURDAY, SEPTEMBER 18, 1880.

☞ Separate paging is given to this Part in order that it may be filed as a separate compilation.

CONTENTS.

	PAGE.
PART I.—Notifications by the Chief Commissioner of Mysore and Coorg.—Notifications by the Government of India...	235—240
PART II.—Notifications, &c., by the Judicial Commissioner; Survey and Settlement Commissioner; Superintendent of Inam Settlements; Deputy Accountant General; Public Works Officers; Military Assistant; Inspector General of Registration; Director of Public Instruction; Deputy Surgeon General of Hospitals; Anche Bakshi; President of the Bangalore Municipal Boards; District and Sessions Judges; Deputy Commissioners of Districts.—Season Reports; Meteorological Registers; Postal Notices, &c.	483—488
PART III.—Acts and Bills of the Governor Genl. of India in Council, &c. The Petroleum Bill, 1880	59—68
PART IV.—Miscellaneous Papers	Nil.
SUPPLEMENT.—Abstract of Season or Intermediate Reports, &c.	1—2.

PART I.

Notifications by the Chief Commissioner of Mysore.

GENERAL DEPARTMENT.

NOTIFICATIONS.

The 2nd August 1880.

No. 81.—The Chief Commissioner will receive Native gentlemen who wish to see him every Friday morning between the hours of 8 and 9 at Government House.

Gentlemen intending to call are requested to send their cards the day before, to the Secretary in the General Department.

The 9th September 1880.

No. 96.—Mr. K. Seshadri Iyer, B. A. and B. L., Deputy Commissioner, delivered over, and Mr. E. Chitambram Iyer, Subordinate Judge, received, charge of the Túmkúr District in the afternoon, and of the Treasury in the forenoon, of the 8th September 1880.

The 10th September 1880.

No. 97.—Mr. E. Chitambram Iyer, Subordinate Judge, delivered over, and Mr. N. Venkat Rao, Attaché, received, charge of the Túmkúr District Treasury and Jail, on the forenoon of the 8th September 1880.

No. 98.—Mr. A. G. Hudson, Assistant Superintendent, Mysore Revenue Survey, is granted privilege leave of absence for one month, under Section 44 of the Civil Leave Code, with effect from the 1st September 1880, or from such other date as he may avail himself of it.

The 13th September 1880.

No. 99.—Mr. N. Venkat Rao, Attaché, Túmkúr District, returned from the leave on medical certificate granted to him in Chief Commissioner's Notification No. 90, dated 24th August 1880, to duty on the forenoon of the 3rd instant.

The unexpired portion of the leave is cancelled.

The 16th September 1880.

No. 100.—D. Shama Rao, Amildar, Bangalore Taluk, is invested with the powers of a Magistrate of the 2nd Class, as described in Sections 20, 22 and 24 of the Code of Criminal Procedure.

By Order,

W. J. CUNINGHAM,
Secretary.

REVENUE DEPARTMENT.

NOTIFICATIONS.

The 31st August 1880.

No. 49.—It is hereby notified for general information that the undermentioned villages at present attached to the Bendikere Magani in the Banavar Taluk of the Kadur District, are transferred to the Haranhalli Taluk of the Hassan District :—

1. Bendikere.	6. Jajur.	11. Hiriyur.	16. Kanihalli.
2. Mahomadpur.	7. Nagatihalli.	12. Bairambadi.	17. Timmappaiyanhalli.
3. Satanhalli.	8. Kalnayakanhalli.	13. Bisalhalli.	18. Timmashettihalli.
4. Saidarhalli.	9. Layalapur.	14. Lakkanhalli.	19. Hariharpur.
5. Chikkur.	10. Devagondanhalli.	15. Gollarhalli.	20. Bettadpur.

The 7th September 1880.

No. 51.—In publishing the accompanying description of a cheap, light and useful plough manufactured at the Cawnpore Farm Workshop, after the best American model, the public are informed that samples of the plough are to be seen at the Lal-Bagh, Bangalore.

THE 'KAISAR' PLOUGH.

Adopted from the best American models, and manufactured at the Cawnpore Farm Workshops under the Department of Agriculture and Commerce, North-Western Provinces and Oudh.

DIAGRAM.

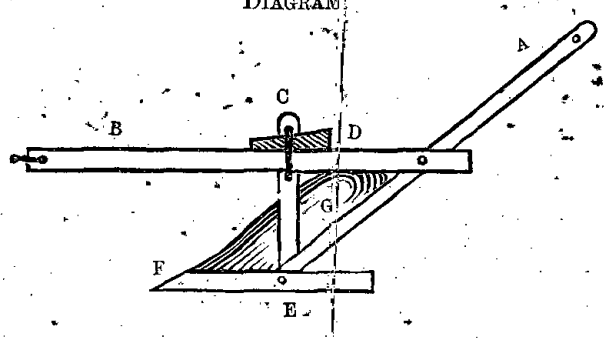

A. The handle (of wood).
B. The beam (of wood).
C. The standard (of iron).
D. The wedge (of wood).
E. The sole (of angle iron).
F. The share (of steel).
G. The breast (of sheet iron).

54

DESCRIPTION OF THE PLOUGH.

The characteristics of this plough are—

(i) *Cheapness*—it only costs Rs. 6 at Cawnpore, and could probably be made up by a native *Mestri* for Rs. 4-8 or Rs. 5.

(ii) *Lightness in weight*—it only weighs 16 seers, and can, therefore, be easily carried on the ploughman's shoulder,

and *in draught*—it can easily be drawn by a pair of ordinarily good bullocks since its draught is only 62 seers on the bullocks, when ploughing at a depth of 5 inches in moderately light soils.

(iii) *Simplicity of construction*—it is made entirely of wrought iron and wood, so as to be easily repairable. All the iron work, except the share, can be purchased in any bazar, consisting as it does of a piece of angle-iron (for the sole), a strip of sheet iron (for the mould board), and an iron bar (for the standard).

The share is made of steel, and is, therefore, durable. When it has worn down it can be easily replaced by a new one, since it is attached in the simplest manner possible, and can easily be slipped on or off at any time.

There are no screws and nuts on the plough, and all attachments are effected by simple rivets.

(iv) *It can easily be adjusted*—so as to suit soils of any consistency or bullocks of any height.

DIRECTIONS FOR USE.

The plough is attached to the yoke by a rope fastened to the iron ring at the end of the beam.

The higher the bullocks are the longer the rope should be: the rope should also be longer in ploughing hard soils than in ploughing loose soils. The average length is from 7 feet 3 inches to 7 feet 9 inches. The length it should be in each case can be discovered in a few minutes experiment.

The plough should travel perfectly evenly on its sole, and should need no downward pressure on the handle to keep the heel down, nor lifting to keep the point down. For this purpose it will be necessary to *alter the adjustment*, if the bullocks are of a different height, or the soil of a different consistency to what the plough was intended for when sent out.

If the point of the plough has a tendency to dig down into the ground, and the plough travels on its point, take out the wooden *wedge* on the beam and shift the *standard* back along the *beam*, towards the *handle*.

This will lift the point up.

If on the other hand the point has a tendency to run up out of the ground, shift the *standard* forward along the *beam*.

This will depress the point.

If the plough be not properly adjusted, the draught is much heavier on the bullocks than it should be.

THE CAPABILITIES OF THE PLOUGH.

It will, with a pair of ordinarily good bullocks and one man (driving with reins fastened to the horns of the bullocks) plough ½ acre (=1 pucka Cawnpore bigha) in a day of 7 hours.

It inverts the soil to the depth of 5 inches and does not merely stir it. The advantages of thus inverting the soil are:—

(i) Any manure which has been spread is effectually buried.

(ii) All weeds are killed and so utilized as manure.

(iii) Fresh soil is brought up to the surface which, after some exposure, becomes in most cases more fertile than the upper crust was.

(iv) A greater depth of soft soil is secured than is possible with the native plough, except after 10 or 12 ploughings ; and the soil absorbs water more readily and will need less artificial irrigation.

For the proper working of the plough it is necessary that the soil be in ploughing condition, *i. e.*, sufficiently damp for a native cultivator to plough it with his own plough.

☞ These ploughs are obtainable on application to the Office of Director, Department of Agriculture and Commerce, Cawnpore, at a price of Rs. 6 each.

SCHOOL OF ENGINEERING AND NATURAL SCIENCE.

The 16*th September* 1880.

No. 52.—It is hereby notified that, with the sanction of the Government of India, the Collegiate Department of the above school is closed.

2. But in order to provide facilities for such of the youths of the Province as may desire to graduate in Engineering in the Colleges elsewhere, a limited number of scholarships of Rs. 25 each per month will be provided from Provincial Funds to aid deserving young men in the Province who may desire to graduate in Engineering in the College at Poona, Madras or Calcutta. Four scholarships will be thrown open in the current year, and two more every year hereafter. The Heads of Schools and the Deputy Commissioners of the Districts may send up through the Director of Public Instruction the names of any applicants who have passed the First Examination in Arts, and who by their intelligence, character and active habits may give promise of turning out useful Engineers. The scholarships will be tenable for the period required to complete the course prescribed, subject to periodical reports of good conduct and progress from the head of the institution. No guarantee can be given for employment in Mysore or elsewhere, though preference would be given to those who had distinguished themselves at College in the selection for appointments in the Province. Applications for the scholarships should be made by the 1st of November in each year.

3. The local school will provide instruction of the standard required for Overseers, Sub-Overseers and Taluk Mestris in the Public Works Department, embracing also the knowledge necessary for Subordinates in the Revenue Survey and Topographical Survey Departments. Admission to the school will be open to all students who have matriculated or have studied for a year in a Matriculation Class. The school fee will be fixed at Rs. 2 per month. Applications for admission are now being received.

4. A limited number of scholarships of Rs. 8 per mensem each will be provided out of the Local Funds of each District, 3 for each of the Districts of Bangalore, Mysore and Shimoga and 1 for each of the remaining five Districts, or 14 scholarships in all. The Deputy Commissioners should in consultation with the Head Masters of the District Schools, select deserving students and send them on such scholarships to the school at Bangalore, where they will moreover be admitted free. Any other poor and deserving students may also be excused the school fee at the discretion of the Director of Public Instruction.

5. No guarantee of appointments will be given, but the Heads of Departments will be required to give preference in filling up appointments to those who pass out of the Local School and who may be found deserving. Not only is there a large field of employment for these men in the subordinate grades of the Public Works Department, as well as in the Revenue Survey and Topographical Survey Establishments, but the possession of such technical qualifications will count in their favor in the filling up of appointments also in the Revenue Department of the Districts and Taluks.

The arrangements for providing instruction in Natural Science and in Botany will shortly be notified.

No. 53.—Mr. J. Ramaiya Naidu, pensioned Assistant Commissioner, is appointed a Municipal Commissioner of No. 5. Blackpalli Division, Bangalore Cantonment, *vice* B. Ramalingam deceased.

By Order,

C. RANGACHARLU,
Revenue Secretary.

PUBLIC WORKS DEPARTMENT.

NOTIFICATION.

The 15*th September* 1880.

No. 23.—Lieutenant-Colonel W. R. Johnson, Superintending Engineer of Mysore, and Public Works Secretary to the Chief Commissioner, is granted 3 months' privilege leave of absence with effect from the 23rd instant.

By Order,

W. R. JOHNSON, *Lieut.-Col.,*
Secretary, P. W. D.

Notifications by the Chief Commissioner of Coorg.

GENERAL.

NOTIFICATION.

The 15*th September* 1880.

No. 14.—Mr. F. B. Dickinson, Assistant Conservator of Forests, Coorg, returned to duty on the 1st instant, from the three months' examination leave granted him in Chief Commissioner's Notification, dated 10th May last.

By Order,

W. J. CUNINGHAM,
Secretary.

Notifications, &c., by the Government of India.

PUBLIC WORKS DEPARTMENT.

NOTIFICATION.

Simla, the 3*rd September* 1880.

No. 293.—The following rules have received the approval of the Secretary of State, and are published for general information :—

I.—The following rule of the Civil Pension Code is made applicable to Officers of Royal Engineers serving in the Public Works Department :—

Section 65, *Rule* 6.—After the age of 55 years, no military or naval officer shall be appointed to a new office in civil employment, or shall be permitted to retain any such office which he has held for five years and upwards, except in special cases, which are to be referred for the decision of the Secretary of State.

II.—Officers of Royal Engineers, who have attained, or hereafter may attain, the rank of general officers, must vacate their appointments in the Public Works Department; but they will be eligible for re-appointment as Chief Engineers, Class I, or in posts carrying that rank. This rule will be brought into force two years from the present date.

III.—No Chief Engineer of the Corps of Royal Engineers shall, without re-appointment, hold the same post for more than five years. This rule, in the case of officers who, on their appointment to that rank, received notice of the probable issue of this order, will take effect from the date they joined their present posts. In other cases the rule will take effect from the date of these orders.

IV.—The foregoing rules are applicable to Officers of Royal Engineers who hold the post of Secretary or of Deputy Secretary to the Government of India in the Public Works Department.

ALEX. FRASER, MAJOR-GENL., R. E.,
Secy. to the Govt. of India.

List of Papers placed at the disposal of the Press.

No.	No. of Letters.	Date.	Subject.
1	3442—887 ...	9th August 1880..	Reviewing the Annual Medical and Sanitary Report and Report on Civil Dispensaries and Special Hospitals in Mysore for 1879.
2	3555—432 ...	11th do ...	Communicating India's approval to the grant to officers and men of the Mysore Infantry of gratuities at three months' pay for every five years' service, limited to a maximum of 12 months' pay on medical certificate when service is less than 30 years.
3	4040—73 ...	26th do ...	Issuing instructions relative to the examination of Amildars in criminal law and procedure.
4	4001—1012...	26th do ...	Ruling that no certificate of physical fitness for the service be accepted unless it is given by a Medical Officer in the Mysore Service.

THE

MYSORE GAZETTE.

No. 38 Published by Authority. of 1880.

BANGALORE, SATURDAY, SEPTEMBER 25, 1880.

☞ Separate paging is given to this Part in order that it may be filed as a separate compilation.

CONTENTS.

	PAGE.
PART I.—Notifications by the Chief Commissioner of Mysore and Coorg.—Notifications by the Government of India...	241—254
PART II.—Notifications, &c., by the Judicial Commissioner; Survey and Settlement Commissioner; Superintendent of Inam Settlements; Deputy Accountant General; Public Works Officers; Military Assistant; Inspector General of Registration; Director of Public Instruction; Deputy Surgeon General of Hospitals; Anche Bakshi; President of the Bangalore Municipal Boards; District and Sessions Judges; Deputy Commissioners of Districts.—Season Reports; Meteorological Registers; Postal Notices, &c.	487—496
PART III.—Acts and Bills of the Governor Genl. of India in Council, &c. The Petroleum Bill, 1880	69—78
PART IV.—Miscellaneous Papers	Nil.
SUPPLEMENT.—Abstract of Season or Intermediate Reports, &c.	1—2

PART I.

Notifications by the Chief Commissioner of Mysore.

GENERAL DEPARTMENT.

NOTIFICATIONS.

The 24th September 1880.

No. 101.—Mr. K. Seshadri Iyer, B. A. and B. L., Deputy Commissioner, Túmkúr District, is granted privilege leave of absence for nine days in extension of that sanctioned in Chief Commissioner's Notification No. 92, dated 30th August 1880.

No. 102.—Mr. B. Tirumalachari, B. L., Subordinate Judge, Chitaldroog District, was granted privilege leave of absence for thirteen days from the 2nd to the 14th September 1880, inclusive.

C. Srinivasaiengar, Munsiff of Chitaldroog, remained in charge of the Chitaldroog Treasury and Jail during that period.

By Order,

W. J. CUNINGHAM,
Secretary.

REVENUE DEPARTMENT.

NOTIFICATIONS.

The 7th September 1880.

No. 51.—In publishing the accompanying description of a cheap, light and useful plough manufactured at the Cawnpore Farm Workshop, after the best American model, the public are informed that samples of the plough are to be seen at the Lal-Bagh, Bangalore.

THE 'KAISAR' PLOUGH.

Adopted from the best American models, and manufactured at the Cawnpore Farm Workshops under the Department of Agriculture and Commerce, North-Western Provinces and Oudh.

DIAGRAM.

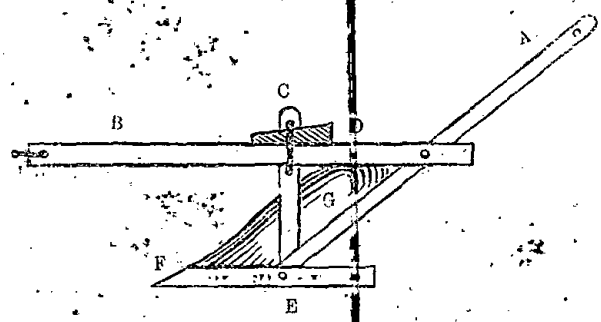

A. The handle (of wood).
B. The beam (of wood).
C. The standard (of iron).
D. The wedge (of wood).
E. The sole (of angle iron).
F. The share (of steel).
G. The breast (of sheet iron).

DESCRIPTION OF THE PLOUGH.

The characteristics of this plough are—

(i) *Cheapness*—it only costs Rs. 6 at Cawnpore, and could probably be made up by a Native *Mestri* for Rs. 4-8 or Rs. 5.

(ii) *Lightness in weight*—it only weighs 16 seers, and can, therefore, be easily carried on the ploughman's shoulder,

and *in draught*—it can easily be drawn by a pair of ordinarily good bullocks since its draught is only 62 seers on the bullocks, when ploughing at a depth of 5 inches in moderately light soils.

(iii) *Simplicity of construction*—it is made entirely of wrought iron and wood, so as to be easily repairable. All the iron work, except the share, can be purchased in any bazar, consisting as it does of a piece of angle-iron (for the sole), a strip of sheet iron (for the mould board), and an iron bar (for the standard).

The share is made of steel, and is, therefore, durable. When it has worn down it can be easily replaced by a new one, since it is attached in the simplest manner possible, and can easily be slipped on or off at any time.

There are no screws and nuts on the plough, and all attachments are effected by simple rivets.

(iv) *It can easily be adjusted*—so as to suit soils of any consistency or bullocks of any height.

DIRECTIONS FOR USE.

The plough is attached to the yoke by a rope fastened to the iron ring at the end of the beam.

The higher the bullocks are the longer the rope should be: the rope should also be longer in ploughing hard soils than in ploughing loose soils. The average length is from 7 feet 3 inches to 7 feet 9 inches. The length it should be in each case can be discovered in a few minutes experiment.

The plough should travel perfectly evenly on its sole, and should need no downward pressure on the handle to keep the heel down, nor lifting to keep the point down. For this purpose it will be necessary to *alter the adjustment*, if the bullocks are of a different height, or the soil of a different consistency to what the plough was intended for when sent out.

If the point of the plough has a tendency to dig down into the ground, and the plough travels on its point, take out the wooden *wedge* on the beam and shift the *standard* back along the *beam*, towards the *handle*.

This will lift the point up.

If on the other hand the point has a tendency to run up out of the ground, shift the *standard* forward along the *beam*.

This will depress the point.

If the plough be not properly adjusted, the draught is much heavier on the bullocks than it should be.

THE CAPABILITIES OF THE PLOUGH.

It will, with a pair of ordinarily good bullocks and one man (driving with reins fastened to the horns of the bullocks) plough ½ acre (=1 pucka Cawnpore bigha) in a day of 7 hours.

It inverts the soil to the depth of 5 inches and does not merely stir it. The advantages of thus inverting the soil are:—

(i) Any manure which has been spread is effectually buried.

(ii) All weeds are killed and so utilized as manure.

(iii) Fresh soil is brought up to the surface which, after some exposure, becomes in most cases more fertile than the upper crust was.

(iv) A greater depth of soft soil is secured than is possible with the native plough, except after 10 or 12 ploughings; and the soil absorbs water more readily and will need less artificial irrigation.

For the proper working of the plough it is necessary that the soil be in ploughing condition, *i. e.*, sufficiently damp for a native cultivator to plough it with his own plough.

☞ These ploughs are obtainable on application to the Office of Director, Department of Agriculture and Commerce, Cawnpore, at a price of Rs. 6 each.

The 14th September 1880.

No. 54.—It is hereby notified for public information that all the rights of the present jodidars and kayamguttadars in the undermentioned jodi and kayamgutta villages in the Hoskote Taluk of the Bangalore District, which have been duly attached in satisfaction of the arrears of revenue due to Government (as shewn in the subjoined statement) by the said jodidars and kayamguttadars, will be sold by public auction at the places and on the dates mentioned in the annexed statement. The sale will commence at 11 A. M. on the dates specified and the villages will be knocked down to the highest bidder without reserve.

2. Purchaser will be required to deposit 25 per cent of the purchase money at the time of sale, and where the remainder of the purchase money may not be paid within 15 days from the day of sale, the money so deposited shall be liable to forfeiture.

3. When such deposit shall not be made nor the remaining purchase money paid up, the lands shall be re-sold at the expense and risk of the first purchaser.

4. Persons bidding at the sale may be required to state whether they bid on their own account or as agents, and in the latter case to deposit a written authority signed by their principals, otherwise their bids will be rejected.

5. The sale shall be stayed, if the defaulter, or any other person acting on his behalf or claiming an interest in the land, tenders the full amount of the arrears of revenue with interest and other charges, provided such tender be made before sunset on the day previous to that appointed for the sale.

6. The sale of the property will not become absolute until the sale has been confirmed by the Chief Commissioner.

7. Purchasers having completed the payment of the purchase money will, as soon as the sale has been confirmed by the Chief Commissioner, be placed in immediate possession and the village will be registered in the name of the purchaser, and a certificate of sale signed and sealed by the Deputy Commissioner will be granted to him. It is to be distinctly understood that the Government are not responsible for errors of description and in estimated extent.

8. Provided parties deeming themselves aggrieved by the sale shall be at liberty to appeal to the Chief Commissioner within thirty days from the day of sale, and the purchase shall be conditional on the final order in such appeal.

Hobli.	Village.	Names of Jodidars and Kayamguttadars.	Boundaries of the Village.	Estimated Extent.	Estimated Beriz.	Quit-Rent payable annually to Government.	Arrears of Revenue for which the Village is to be sold. Years.	Amount.			Date of Sale, &c.
Sülbele.	Vanammanahalli.	Parvatabhat and Nanjundabhat.	*Jodi Villages.* Bounded on the north by Jodi Siddanahalli, south by Nanjapura, east by Tammarasanahalli, west by Bettahalli.	K. 15, K. 0, P. 0.	Rs. 52—0—0.	Rs. 47—0—0.	1878—79...	18	0	9	16th October 1880, at the Sülbele Kasba, before the Amildar.
							1879—80...	19	4	0	
							Total...	37	4	9	
	Krishnapura.	Parvatabhat and Nanjundabhat.	Bounded on the north by Belur, south by Yeddrikoipura, east by Narasapura, west by Appasandra.	K. 10, K. 0, P. 0.	34—0—0	31—0—0	1879—80	22	6	10	Do

Hobli.	Village.	Names of Jodidars and Kayamguttadars.	Boundaries of the Village.	Estimated Extent.	Estimated Beriz.	Quit-Rent payable annually to Government.	Arrears of Revenue for which the Village is to be sold. Years.	Amount.			Date of Sale, &c.
Sûlbele.	Arasanahalli.	Krishna Rao, on behalf of Tulasi Bayi.	Bounded on the north by Ankonahalli, south by Kadaranpura, east by Battiganhalli, west by a river.	K. 10.	41—5—0.	21—0—0.	1876—77...	0	4	8	16th October 1880, at the Sûlbele Kasba, before the Amildar.
							1877—78...	2	4	8	
							1878—79...	8	4	8	
							1879—80...	9	9	4	
							Total...	20	7	4	
	Bidiganhalli.	Annaiya Shastri.	Bounded on the north by Iruganahalli, south by Ivararasapura, east by the river Dakshinapinakini, west by Naganayakanhalli in the Devanhalli Taluk.	K. 21, C. 2, P. 1½.	91—0—0	84—0—0	1879—80...	33	3	0	Do.
	Dasarahalli.	Srinivas Rao, &c., on behalf of Mangamma.	Bounded on the north by the bed of Hullur tank, south by Halasahalli, east by Gottipura, west by the bed of Hullur tank.	K. 12, C. 19.	53—4—8.	46—8—0.	1876—77...	15	11	3	Do
							1877—78...	5	11	9	
							1878—79...	22	2	3	
							1879—80...	22	6	9	
							Total...	66	0	0	
	Iruganahalli.	Narsimmabhatta and others.	Bounded on the north by Belavanahalli, south by Bidiganahalli, east by the river Dakshinapinakini, west by Gajaguppe in the Devanhalli Taluk.	K. 9, C. 8, P. 6½.	33—0—0	30—0—0	1876—77...	6	3	0	Do
							1877—78...	...	5	6	
							1878—79...	12	0	6	
							1879—80...	...	3	11	
							Total...	18	12	11	
	Tammarayasandra.	Krishnappa, Subbabhatta and others.	Bounded on the north by Srinivaspur, south by Palavanchi, east by Buvanahalli, west by Sesimakanahalli.	K. 18, C. 17, P. 14¾.	30—0—0	28—0—0	1876—77...	26	11	0	Do
							1877—78...	4	6	10	
							1878—79...	1	1	0	
							1879—80...	26	2	6	
							Total...	58	5	4	
	Sedenanahalli.	Kadi Rama Chari.	Bounded on the north by Kambadabidu and Kasipura, south by Bettahalli, east by Tammarasanahalli, west by Bettahalli.	K. 15, C. 13, P. ¾.	9—8—0	8—8—0	1876—77...	4	10	6	Do
							1877—78...	2	12	9	
							1878—79...	0	4	9	
							Total...	7	12	0	

Hobli.	Village.	Names of Jodidars and Kayamguttadars.	Boundaries of the Village.	Estimated Extent.	Estimated Beriz.	Quit-Rent payable annually to Government.	Arrears of Revenue for which the Village is to be sold. Years.	Amount.			Date of Sale, &.
Vagata.	Kurubaragollahalli.	Narsinga Rao and others.	Bounded on the north by Kurubarahosahalli in the Malur Taluk, south by Kamarasanahalli, east by Maratagondahalli, west by Govindapura.	K. 6.	37—13—11.	38—0—0.	1876—77...	34	14	11	On the 6th October 1880, at the Taluk Cutcherry before the Amildar.
							1877—78...	34	14	11	
							1878—79...	35	4	7	
							1879—80...	23	12	9	
							Total... ..	128	15	2	
	Paramanahalli.	Nanjunda Bhatta, Seshagiri Rao and others.	Bounded on the north by Vagata Agrahara & Honachanahalli, south by Tarabahalli, east by Kamarasanahalli, west by Donkere.	K. 68.	256—5—1.	236—0—0	1877—78...	29	8	5	Do.
							1879—80...	48	8	8	
							Total...	78	1	1	
Kadgodi.	Halasahalli-Tippasandra.	Anekal Andanappa.	Bounded on the north by Chikkanekondi in the Bangalore Taluk, south by Hegondahalli, east by Dommasandra in the Anekal Taluk, west by Gunjur in the Bangalore Taluk.	K. 79, C. 6., P. 10½.	131—0—7.	126—3—0.	1876—77...	86	1	0	On the 6th October 1880, at the village before the Amildar.
							1878—79...	52	0	6	
								138	1	6	
	Kotur.	Shamachari and others.	Bounded on the north by Harohalli, south by Mutchandra, east by Mutchandra, west by Gulikayipura.	K. 14, C. 4.	65—1—6.	50—1—1.	1876—77...	14	0	6	On the 7th October 1880, at the village before the Amildar.
							1877—78...	8	0	1	
							1878—79...	11	15	10	
							1879—80...	0	5	9	
							Total...	34	6	2	
Súlbele.	Kadaranpura.	Munshi Krishnappa and Imam Sabi and Hyder Sabi, the enjoyees.	*Kayamgutta Villages.* Bounded on the north by Arasanahalli, south by Súlbele, east by Rampura, Súlbele, west by a river.	K. 11, C. 3, P. 0.	97—7—3.	97—0—0.	1877—78...	1	3	0	On the 15th October 1880, in the Súlbele Kasaba, before the Amildar.
							1878—79...	5	9	0	
							1879—80..	7	0	3	
								13	12	3	
	Yekarajpur.	Divakar Bhatta, Venkatesa Bhatta and others.	Bounded on the north by Chikkoli, south by Kamblipur, Gollahalli, east by Begur, west by Mutchandra.	K. 30.	80—0—0,	79—0—0.	1876—77...	55	0	3	Do.
							1877—78...	39	12	3	
							1878—79...	59	7	0	
							1879—80...	64	10	8	
								218	14	2	

Hobli.	Village.	Names of Jodidars and Kayamguttadars.	Boundaries of the Village.	Estimated Extent.	Estimated Beriz.	Quit-Rent payable annually to Government.	Arrears of Revenue for which the Village is to be sold. Years.	Amount.			Date of Sale, &c.
Sûlbele.	Kolala Chinnenahalli.	Subbamma.	Bounded on the north by Bhattrahalli in the Malur Taluk, south by Nandagudi, Gangapura, east by Chokkadasarahalli in the Malur Taluk, west by Guddada Chinnenahalli.	K. 10., C. 0.	26—7—7.	13—9—6.	1876—77... 1877—78... 1878—79... 1879—80...	13 13 13 14	9 9 9 0	6 6 6 6	On the 15th October 1880 in the Sûlbele Kasba before the Amildar.
								54	13	0	
	Guddada Chinnenahalli.	Subbamma.	Bounded on the north by Goderamanahalli, south by Gangapur, east by Kolala Chinnenahalli, west by Markandahalli in the Kolar Taluk.	K. 6.	8—11—8	6—5—6	1876—77... 1877—78... 1878—79... 1879—80...	6 6 6 6	5 5 5 9	6 6 6 3	Do.
								25	9	9	
	Ittasandra.	Sinappa on behalf of Guttadar.	Bounded on the north by Valakunte plantation, south by Rama Govindapur, east by Nandagudi, west by Istur.	K. 108., C. 7., P. 8¼.	362—14—7.	288—4—2.	1876—77... 1877—78... 1878—79...	288 286 216	4 11 8	3 8 0	Do.
								791	7	11	
	Dyavasandra.	Krisnhappa.	Bounded on the north by Haniyur, south by Aralagere tank, east by Balenahalli, west by Chik Aralagere.	K. 10., C. 0.	158—14—10.	158—0—0.	1876—77... 1878—79... 1879—80...	10 22 102	11 1 5	2 0 0	Do.
								135	1	2	
	Kolani Ossur.	Pulumutti Subba Rao.	Bounded on the north by Narayandasarhalli in the Sidlagatta Taluk, south by Sanjivipur and Arakere, east by Chemmangala, Devanhalli Taluk, west by Hosa Nagamangala and Basapatna	K. 9., C. 0.	85—13—1.	48—7—3.	1876—77... 1877—78... 1878—79... 1879—80...	19 20 19 50	7 3 5 2	3 3 3 10	Do.
								109	2	7	
	Santanapura.	Venkanna.	Bounded on the north by Pottabarlu, south by Bettahalli tank, east by Kasipura, west by Votkatte of Iregrama and bed of the tank.	K. 15., C. 0.	29—1—5.	14—8—8.	1876—77... 1878—79... 1879—80...	15 0 0	0 7 15	10 4 6	Do.
								16	7	8	

Hobli.	Village.	Names of Jodidars and Kayamguttadars.	Boundaries of the Village.	Estimated Extent.	Estimated Beriz.	Quit-Rent payable annually to Government.	Arrears of Revenue for which the Village is to be sold. Years.	Amount.			Date of Sale, &c.
Nandagudi.	Bairasandra.	Vasudevachari.	Bounded on the north by Sonnenahalli in the Malur Taluk, south by Uddappanahalli in the Malur Taluk, east by Belur in do., west Chokarasanahalli in do.	K. 23., C. 15.	135—10—2.	139—10—2.	1876—77 1877—78 1878—79 1879—80	2 18 88 100	7 0 0 8	8 2 2 2	On the 18th October 1880, at Nandagudi before the Amildar.
								209	0	2	
Nandagudi.	Sivanapura.	Krishna Rao.	Bounded on the north by Gullenahalli and Badenahalli, south by Bhimapura, east by Sonniganahalli and Birhalli, west by Kanjiranahalli and Koradarhalli.	K. 47., C. 4. P. 12.	1,090—12—11	695—0—0	1876—77 1877—78 1878—79 1879—80	280 30 22 68	2 10 2 11	0 0 0 2	On 20th, 21st, and 22nd October 1880, at the Taluk Office before the Amildar.
								401	9	2	
	Bhimapura.	Sitaramaiya.	Bounded on the north by Sivanapura, south by Marenahalli, east by Bingipura, west by Itiyatanhalli.	K. 41. C. 2. P. 1.	418—7—7	252—0—0	1876—77 1877—78 1878—79 1879—80	7 7 11 95	5 5 9 10	3 3 9 0	
								121	14	3	
Vagala.	Doddatagali.	Mahadeva Rao.	Bounded on the north by Injanahalli and Appasandra, south by Chikatagali, Channigarayapura, east by Alagondahalli, west by Marenahalli and Injanahalli.	K. 35. C. 14. P. 3.	590—4—8	186—0—0	1877—78 1878—79 1879—80	133 192 87	5 8 10	10 8 0	
								413	8	6	
	Mutakur.	Kasipataiya, Nagam Bhatta, &c.	*Jodi Villages.* Bounded on the north by Dannasandra and Hemmandahalli, south by a river, east by Anagondahalli, west by Haroballi.	K. 70.	204—0—0	188—0—0	1876—77 1877—78 1878—79 1879—80	54 14 77 87	7 4 5 7	8 5 8 8	
								233	9	5	
	Byalahalli.	Rama Bhatta.	Bounded on the north by Yedagondahalli, south by Belekere, east by Arahalli, west by Mutkur Tank.	K. 49. C. 2. P. 1.	117—0—0	107—0—0	1876—77 1879—80	17 6	0 5	0 2	
								23	5	2	
	Muttakadahalli.	Visvanatha Shastri.	Bounded on the north by Byalahalli, south by Guttahalli, east by Arahalli and Guttahalli, west by Byalahalli.	K. 8.	39—0—0	36—0—0	1876—77 1879—80	18 38	10 7	6 0	
								57	1	6	

The 17th September 1880.

No. 55.—It is hereby notified that the jodi inam villages of the Kunigal, Túmkúr, Koratagere, Chiknayakanhalli and Maddagiri Taluks in the Túmkúr District (hereunder more fully described), which have been duly attached for arrears of quit-rent and local cesses due to Government by the jodidars, will be sold by public auction at the Deputy Commissioner's Office at Túmkúr on the 18th October 1880: the sale will commence at 11 A. M. on that date and be knocked down to the highest bidder at 5. P. M. on the same day.

2. Provided that when a village is divided into separate recognized vrittis, the Deputy Commissioner may at his option, instead of selling the village as a whole, sell each vritti separately.

3. The annual quit-rent (excluding irrigation and local cesses) payable by the purchaser on the jodi villages in question is shewn in detail in the statement at foot.

4. Purchasers will be required to deposit 25 per cent of the purchase money at the time of sale, and the remainder of the purchase money at such time as may be fixed by the Deputy Commissioner in each case at the time of sale. If the remainder of the purchase money be not accordingly paid, money so deposited shall be liable to forfeiture.

5. When such deposit shall not be made or when the remaining purchase money shall not be paid within 15 days of the day of sale, the property in question shall be re-sold at the expense and risk of the first purchaser.

6. Persons bidding at a sale may be required to state whether they bid on their own account, or as agents, and in the latter case to deposit a written authority signed by the principals, otherwise their bids may be rejected.

7. The sale shall be stayed, if the defaulter, or any person acting on his behalf or claiming an interest in the property, tenders the full arrears of revenue with interest and other charges, provided such tenders be made before sunset on the day previous to that appointed for the sale.

8. Purchasers having completed the payment of the purchase money will be placed in immediate possession, and the village will be registered in the name of the purchaser and a certificate of sale signed and sealed by the Deputy Commissioner will be granted to him. It is to be distinctly understood that the Government are not responsible for errors of description or in estimated extent or income.

9. Provided that parties deeming themselves aggrieved by the sale shall be at liberty to apply to the Deputy Commissioner within thirty days from the day of sale and the purchase shall be conditional on the final order on such application.

Taluk.	Village.	Names of Jodidars	Descriptions of the Village.	Estimated Extent.	Estimated Gross Rental or Beriz.	Quit-Rent payable to Government.	Arrears of Government Revenue including Local Cesses for which Village is to be sold.			
							Years.	Amount.		
Kunigal.	Chikka Kempa Ságara jodi, village.	Krishna Shastri and 6 others.	Situated in the Huliyurdurga Sammat. Bounded on the north by Madugonalli, on the south by Torchalla, on the east by Hosahalli, on the west by Kichavadi.	A. 186 C. 63.	Rs. 70—0—0.	„ 27—0—0.	Dhatu ... Isvara ... Bahudhanya. Pramadi ...	12 29 29 31	3 3 3 6	0 0 0 0
								101	15	0

Taluk.	Village.	Names of Jodidars.	Descriptions of the Village.	Estimated Extent.	Estimated Gross Rental or Beriz.	Quit-Rent payable to Government.	Arrears of Government Revenue including Local Cesses for which the village is to be sold. Years.	Amount.		
Kunigal.	Hosahalli, jodi village.	Magadi Appavadhani and 30 others.	Situated in the Bedarhalli Sammat. Bounded on the north by Yelagalavadi, on the south by Dasanapura, on the east by Yelagalavadi, on the west by Yelachavadi and Yadahalli.	A. 361 C. 32.	Rs. 282—0—0.	„ 127—0—0.	Dhatu ...	72	0	10
							Pramadi ...	3	13	0
								75	13	10
	Halagere, jodi village.	Chikka Rama Shastri and 26 others.	Situated in the Amratur Sammat. Bounded on the north by Hundalagere, on the south by Vaddarhalli, on the east by Honnamachanahalli and Doddaguni, on the west by Jinnagere, Settipura and Hundalagere.	A. 1170 C. 49.	Rs. 784—15—6.	„ 491—12—0.	Dhatu ...	20	9	4
							Iswara ...	47	10	8
							Bahudhanya.	48	13	8
							Pramadi ...	23	0	0
								140	1	8
	Hundalagere, jodi village.	Narayanabhatta of Nagamangala and 5 others.	Situated in the Amratur Sammat. Bounded on the north by Hosapalya and Bandihalli, on the south by Balekatte and Settipura, on the east by Korati and Balekatte, on the west by Bellagere and Hosapalya.	A. 526 C. 35.	Rs. 345—0—0.	Rs. 184—0—0.	Dhatu ...	67	13	0
							Iswara ...	17	5	9
							Bahudhanya.	0	0	0
							Pramadi ...	7	8	4
								92	11	1
	Ungra, jodi village.	Melkote Venkatrangachari and 11 others.	Situated in the Amratur Sammat. Bounded on the north by Kilara and Kaggalahalli, on the south by river, on the east by Kaggalahalli and Putterayanahalli, on the west by Yedavani.	A. 719 C. 52.	Rs. 314—0—0	Rs. 173—0—0	Dhatu ...	65	4	2
							Iswara ...	67	6	8
							Pramadi ...	8	1	11
								140	12	9
	Kittamangala ¼ share, jodi village.	Rangabhatta and 47 others.	Situated in the Kunigal Sammat. Bounded on the north by Kallupalya, on the south by Guntuganalli and Gujanalli, on the east by Kundur and Karekallu, on the west by Kittamangalada Amani tank and Nagadiyat lands.	A. 225 C. 5.	Rs. 160—0—0.	Rs. 46—0—0	Dhatu ...	24	6	5
							Iswara ...	43	6	9
							Bahudhanya.	1	0	0
							Pramadi ...	56	0	0
								124	13	2

Taluk.	Village.	Names of Jodidars.	Descriptions of the Village.	Estimated Extent.	Estimated Gross Rental or Beriz.	Annual Quit-Rent payable to Government.	Arrears of Government Revenue including Local Cesses for which the Village is to be sold. Years.	Amount.		
Kunigal.	Nittur, ¼ share, jodi village.	Shankar Lingaiya and 6 others.	Situated in the Utridurga Sammat.	...	Rs. 220—0—0.	Rs. 72—0—0.	Dhatu ...	16	14	0
							Iswara ...	65	1	5
							Bahudhanya.	4	14	8
							Pramadi ...	15	3	9
								102	1	10
	Kempasagara, jodi village.	Sura Shastri and 41 others	Situated in the Kottigere Sammat. Bounded on the north by Settigere, on the south by Nilattanahalli Ane and Kaval, on the east by Sunkigatta, on the west by Settigere.	...	Rs. 882—0—0	Rs. 390—0—0.	Dhatu ...	417	9	0
							Iswara ...	417	9	0
							Bahudhanya.	301	5	0
							Pramadi ...	61	9	6
								1,198	0	6
	Nilattanahalli ¼ share, jodi village.	Venkatrangachari and 21 others.	Situated in the Kottigere Sammat. Bounded on the north by Nilattanahalli Ane and Kaval, on the south by portion of Nilattanahalli village, on the east by Ajjagaudanapalya, on the west by Nilattanahalli Amani tank.	A. 136.	Rs. 152—15—10.	Rs. 62—0—0.	Dhatu ...	85	5	4
							Iswara ...	112	0	10
							Bahudhanya	66	12	6
							Pramadi ...	64	7	4
								328	10	0
	Krishnasagara, jodi village.	Dasambhatta and 28 others.	Situated in the Kunigal Sammat.	...	Rs. 500—0—0	Rs. 328—0—0	Dhatu ...	8	14	7
							Iswara ...	19	5	4
							Bahudhanya.	19	5	4
							Pramadi ...	20	7	6
								68	0	9
	Mangla, jodi village.	Melkote Anantachari.	Situated in the Yediyur Sammat. Bounded on the north by sunnada mara, on the south by Tiptur, on the east by Tubinakere, on the west by Markonahalli and Kodvatti.	A. 1,283.	Rs. 936—15—5.	Rs. 255—0—0	Dhatu ...	284	4	6
							Iswara ...	81	2	6
							Bahadhunya.	284	4	6
							Pramadi ...	198	9	0
								848	4	6
	Singonahalli and 2 Mudligiripalyas connected to do. Jodi village.	Nagasandra Devarbhatta and 19 others.	Situated in the Yediyur Sammat. Bounded on the north by Balakere, on the south by Singonahalli, on the east by Avergere, on the west by Nadamavinapur Anehanta.	A. 446, C. 26.	Rs. 386—9—5.	Rs. 109—0—0.	Dhatu ..	110	1	4
							Iswara ...	121	1	4
							Bahudhanya.	21	6	4
							Pramadi ...	24	2	7
								276	11	7

Taluk.	Village.	Names of Jodidars.	Descriptions of the Village.	Estimated Extent.	Estimated Gross Rental or Beriz.	Annual Quit-Rent payable to Government.	Arrears of Government Revenue including Local Cesses for which the Village is to be sold. Years.	Amount.		
Kunigal.	Hedegere, Jodi Village.	Surappa and 3 others.	Situated in the Yediyur Sammat. Bounded on the north by Arekere, on the south by Kotekere, on the east by Gunagere, on the west by Bidagere.	A. 353, C. 21.	250—0—0.	184—0—0.	Dhatu ... Iswara ... Bahudhanya.	191 191 90	13 13 10	0 0 6
								474	4	6
	Hudugalavadi and Ujjini Channana Doddi connected to do Jodi Village.	Koppada Venkatappa and 13 others.	Situated in the Koppa Sammat. Bounded on the north by Koppa, on the south by Devastani Hosahalli, on the east by Chikkonahalli, on the west by Gulur Koppa.	A. 629, C. 49.	400—0—0.	310—0—0.	Dhatu ... Iswara ... Bahudhanya. Pramadi ...	130 322 172 145	8 8 8 0	7 0 0 0
								770	8	7
	Kumsanalli, Jodi Village.	Venkatrambhatta, Suraiyabhatta and 36 others.	Situated in the Kodiginalli Sammat. Bounded on the north by Dodda Malur and Jogenalli, on the south by Kurudi and Hunusavadi, on the east by Dodda Malur and Bisalahalli, on the west by Kondavadi and Chikka Malur.	A. 2,882, C. 32.	1,672—2—9.	301—0—1.	Dhatu ... Iswara ... Bahudhanya. Pramadi ...	211 403 403 435	13 13 13 13	6 6 6 0
								1,455	5	6
Maddagiri.	Bhairapura, Jodi Village.	1. Maddagiri Kondibhatta. 2. Venkatrambhatta. 3. Narasamma.	Situated in the Kodiginalli Sammat. Bounded on the north by Kalityapura, on the south by Malur and Dasarhalli, on the east by Kalityapura, on the west by Kodiginalli.	A. 211, C. 68.	50—0—0.	19—0—0.	Dhatu ... Iswara ... Bahudhanya. Pramadi ...	22 22 22 22	2 2 2 2	0 0 0 0
								88	8	0
	Adavi Naganahalli, Jodi Village.	Annaiyachar and 9 others.	Situated in the Kodiginalli Sammat. Bounded on the north by Suddekunte, on the south by Maitanahalli, on the east by Singanahalli, on the west by Tippapura.	A. 1,773, C. 58.	300—0—0	63—0—0	Dhatu .. Iswara ... Bahudhanya. Pramadi ...	... 40 31 5	... 11 12 6	... 6 0 0
								77	12	6
	Varadanahalli, Kayamgutta Village.	Naranabhatta and others.	Situated in the Kodiganalli Sammat. Bounded on the north by Dodda Dalivatta, on the south by Suddekunte, on the east by Chikka Dalivatta, on the west by Suddekunte.	A. 280	...	19—2—0	Dhatu ... Iswara ... Bahudhanya. Pramadi	2 12 7 0	0 14 6 1	8 8 2 8
								22	7	2

Taluk.	Village.	Names of Jodidars.	Descriptions of the Village.	Estimated Extent.	Estimated Gross Rental or Beriz.	Annual Quit-Rent payable to Government.	Arrears of Government Revenue including Local Cesses for which the Village is to be sold. Years.	Amount.		
Maddagiri.	Mallenalli, jodi village.	Maddagiri Ramaseshabhatta and 9 others.	Situated in the Maddagiri Sammat. Bounded on the north by Samboganalli, Mutyanapalya, on the south by Sogutihalli, on the east by Sambenalli and Gondihalli, on the west by Poligatahalli and Bijavara.	A. 451 C. 26.	470—0—0.	339—0—0.	Dhatu ... Iswara ... Bahudhanya. Pramadi ...	179 264 379 382	7 10 15 12	1 11 3 6
								1,206	13	9
	Viramanahalli, Kayamgutta village.	1. Subba Pandita 2. Shama do 3. Venkatnarsappa.	Situated in the Maddagiri Sammat. Bounded on the north by Oodenalli, on the south by Janakalugutte, on the east by Settihallihalla, on the west by Namatagundu.	A. 50.	21—0—3	21—0—3	Dhatu ... Iswara ... Bahudhanya. Pramadi ...	6 21 1 21	4 0 0 0	3 3 3 3
								49	5	0
	Sivanagere, jodi village.	1. Ramanna 2. Venkatramachariu 3. Annibhatta and 24 others.	Situated in the Pantayala Sammat. Bounded on the north by Hosahalli, on the south by Pittenalli, on the east by Gute village, on the west by Puttasandra of Sira Taluk.	A. 2,095, C. 14.	1,135—0—0.	346—0—0.	Dhatu ... Iswara ... Bahudhanya. Pramadi ...	289 365 281 183	2 5 8 3	8 0 6 9
								1,119	3	11
	Gumpalahalli, jodi village.	Ramabhatta and 5 others.	Situated in the Midagesi Sammat. Bounded on the north by Tippagondanahalli, on the south by Guddata Timmanahalli jodi village, on the east by Bora Chikkanahalli, on the west by Arenalli.	A. 495, C. 30.	150—0—0.	54—0—0	Dhatu .. Iswara ... Bahudhanya. Pramadi ...	16 63 63 64	8 6 6 3	0 0 0 0
								207	7	0
	Hanumantapura, Kayamgutta village.	Venkannaiya and others.	Situated in the Puravara Sammat. Bounded on the north by Andralu, on the south by Bada Chaudanahalli, on the east by Kondavadi, on the west by river.	...	106—7—9	106—7—9	Dhatu ... Iswara .. Bahudhanya. Pramadi ...	25 54 57 3	13 3 13 10	6 3 5 3
								141	8	5
Koratagere.	Kalavahalli, jodi village.	Gundabhatta and Bhaskara Rao.	Situated in the Kolal Sammat. Bounded on the north by Gedamanahalli, on the south by Karkalhalli, on the east by Sunkadahalli, on the west by Bavatanahalli.	A. 236, C. 18.	149—0—0.	82—4—0.		283	12	0

Taluk.	Village.	Names of Jodidars.	Descriptions of the Village.	Estimated Extent.	Estimated Gross Rental or Beriz.	Quit-Rent payable to Government.	Arrears of Government Revenue including Local Cesses for which the Village is to be sold. Years.	Amount.		
Chiknayakanhalli.	Kondajji, jodi village.	Krishna Shastri, Venkatesa Shastri and 72 others.	Situated in the Dandinasivara Sammat. Bounded on the north by tank, on the south by limit of Kadaba Taluk, on the east by Dombarahalli and Banterhalli villages, on the west by limit of Kadaba Taluk.	A. 2,737, C. 39.	2,632—12—0.	1,093—0—0	Dhatu ... Iswara ... Bahudhanya. Pramadi ...	951 76 598 1,125 2,751	8 2 2 12 8	0 0 0 0 0
	Hulisandra, jodi village.	Subramanya Dikshita and 49 others.	Situated in the Dabbegatta Sammat. Bounded on the north by Horikaval, on the south by Dunda village, on the east by Bommanakere, on the west by Hosahalli.	A. 798, C. 50.	617—7—3.	370—4—0.	Dhatu ... Iswara ... Bahudhanya. Pramadi ...	389 379 134 154 1,058	8 8 8 7 1	9 9 5 4 3
Tumkur.	Mullukunte, jodi village.	Lakshmi Narasimmaiyabhatta and 48 others.	Situated in the Honnudike Sammat. Bounded on the north by Virupasandra and Viranayakanhalli villages, on the south and west by Chikkapura and Honasagere villages, on the east by Honnudike and Anapanahalli villages.	A. 776, C. 39.	1,040—5—0.	308—0—0.	Dhatu ... Iswara ... Bahudhanya Pramadi ...	141 247 354 297 1,040	1 15 9 1 12	5 4 9 7 1
	Puttasandra, jodi village.	1 Devarayadurga Narasimhaswami. 2. Sivaram Shastri. 3. Bhairavabhatta and 56 others.	Situated in the Urdigere Sammat. Bounded on the north by Virapura and Lingapura, on the south by Bhairasandra and Tigalarahalli, on the east by Menasandra and Singalipura of Koratagere Taluk, on the west by Dundanahalli and Marachanahalli.	A. 1,075, C. 38.	1,201—9—7.	582—0—0	Dhatu ... Iswara ... Bahudhanya. Pramadi ...	395 423 192 398 1,409	0 12 4 0 0	0 0 11 0 11

The 23rd September 1880.

No. 56.—It is hereby notified for public information that all the rights of the present jodidars in the undermentioned jodi village in the Hoskote Taluk of the Bangalore District, which has been duly attached in satisfaction of the arrears of revenue due to Government (as shewn in the subjoined statement) by the said jodidars, will be sold by public auction at the village before the Amildar on the 26th October 1880. The sale will commence at 11 A. M. on that date and the village will be knocked down to the highest bidder without reserve.

2. Purchasers will be required to deposit 25 per cent of the purchase money at the time of sale, and where the remainder of the purchase money may not be paid within 15 days from the day of sale, the money so deposited shall be liable to forfeiture.

3. When such deposit shall not be made, nor the remaining purchase money paid up, the lands shall be resold at the expense and risk of the first purchaser.

4. Persons bidding at the sale may be required to state whether they bid on their own account or as agents, and in the latter case, to deposit a written authority signed by their principals, otherwise their bids may be rejected.

5. The sale shall be stayed, if the defaulter, or any other person acting on his behalf or claiming an interest in the land, tenders the full amount of arrears of revenue with the interest and other charges, provided such tender be made before sunset on the day previous to that appointed for the sale.

6. The sale of the property will not become absolute until the sale has been confirmed by the Chief Commissioner.

7. Purchasers having completed the payment of the purchase money will, as soon as the sale has been confirmed by the Chief Commissioner, will be placed in immediate possession, and the village will be registered in the name of the purchaser, and a certificate of sale signed and sealed by the Deputy Commissioner will be granted to him. It is to be distinctly understood that the Government are not responsible for errors of description and in estimated extent.

8. Provided parties deeming themselves aggrieved by the sale shall be at liberty to appeal to the Chief Commissioner within 30 days from the day of sale, and the purchase shall be conditional on the final order in such appeal.

Hobli.	Village.	Names of Jodidars.	Boundaries of the Village.	Estimated Extent.			Estimated Beriz.			Quit-Rent payable annually to Government.			Arrears of Government Revenue for which Village is to be sold.			
													Years.	Amount		
				K.	K.	P.	R.	A.	P.	R.	A.	P.				
Mugalur.	Bagur.	Vasudevachar and Shamachar.	Bounded on the north by Ganagalur, on the south by Gundur, on the east by Marangere, on the west by jodi Tiruvaranga village.	37	15	10¼	193	5	9	193	5	4	Dhatu ...	93	5	9
													Isvara ...	93	5	9
													Bahudhanya.	93	5	9
													Pramadi ..	193	5	4
													Total.....	473	6	7

N. B.—The sale includes the tamarind, mango, honge, and ippe trees in the village.

The 21st September 1880.

No. 57.—Gopalaiengar, Amildar of the Gundlupet Taluk, is granted two months' leave on medical certificate from such date as he may avail himself of the same.

2. Ramaswami Iyer, Naib Sheristadar, Town Magistrate's Court, Mysore, is appointed to act as Amildar and 3rd Class Magistrate of the Gundlupet Taluk, during the absence of Gopalaiengar or until further orders.

By Order,

C. RANGACHARLU,
Revenue Secretary.

PUBLIC WORKS DEPARTMENT.

NOTIFICATIONS.

The 17th September 1880.

No. 24.—Mr. T. Inman, Assistant Engineer, is granted one month's privilege leave in extension of the three months' language leave sanctioned in Notification No. 20, dated 9th July 1880.

No. 25.—The Chief Commissioner has been pleased to appoint Mr. Ricketts, Deputy Commissioner, Bangalore, to officiate as Director, Government Gardens, during the absence of Lieutenant-Colonel Johnson on privilege leave, or until further orders.

By Order,

W. R. JOHNSON, *Lieut.-Col.*,
Secretary, P. W. D.

The 23rd September 1880.

No. 26.—Major C. Bowen, R. E., assumed charge of the office of Superintending Engineer and Public Works Secretary to the Chief Commissioner of Mysore, from Lieutenant-Colonel Johnson, on the forenoon of the 23rd instant.

By Order,

C. BOWEN, *Major*, R. E.,
Offg. Secretary, P. W. D.

THE

MYSORE GAZETTE.

No. 39 Published by Authority. of 1880.

BANGALORE, SATURDAY, OCTOBER 2, 1880.

☞ Separate paging is given to this Part in order that it may be filed as a separate compilati on.

CONTENTS.

PAGE.

PART I.—Notifications by the Chief Commissioner of Mysore and Coorg.—Notifications by the Government of India... 257—274

PART II.—Notifications, &c., by the Judicial Commissioner; Survey and Settlement Commissioner; Superintendent of Inam Settlements; Deputy Accountant General; Public Works Officers; Military Assistant; Inspector General of Registration; Director of Public Instruction; Deputy Surgeon General of Hospitals; Anche Bakshi; President of the Bangalore Municipal Boards; District and Sessions Judges; Deputy Commissioners of Districts.—Season Reports; Meteorological Registers; Postal Notices, &c. ... ... 497—504

PART III.—Acts and Bills of the Governor Genl. of India in Council, &c. Nil.

PART IV.—Miscellaneous Papers ... ... Nil.

SUPPLEMENT.—Abstract of Season or Intermediate Reports, &c.

PART I.

Notifications by the Chief Commissioner of Mysore.

GENERAL DEPARTMENT.

NOTIFICATIONS.

The 27th September 1880.

No. 103.—Mr. B. K. Venkat Vardaiengar, Assistant Commissioner, Túmkúr District, returned from the three months' privilege leave granted to him in Chief Commissioner's Notification No. 51, dated 15th June last, to duty on the forenoon of the 21st instant.

The 29th September 1880.

No. 104.—Colonel R. C. Stewart delivered over, and Colonel C. A. Benson received, charge of the office of Military Assistant to the Chief Commissioner, on the afternoon of the 28th September 1880.

By Order,

W. J. CUNINGHAM,
Secretary.

REVENUE DEPARTMENT.

NOTIFICATIONS.

The 7th September 1880.

No. 51.—In publishing the accompanying description of a cheap, light and useful plough manufactured at the Cawnpore Farm Workshop, after the best American model, the public are informed that samples of the plough are to be seen at the Lal-Bagh, Bangalore.

THE 'KAISAR' PLOUGH.

Adopted from the best American models, and manufactured at the Cawnpore Farm Workshops under the Department of Agriculture and Commerce, North-Western Provinces and Oudh.

DIAGRAM.

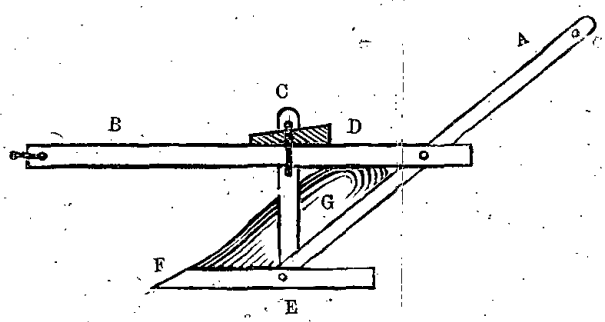

A. The handle (of wood).
B. The beam (of wood).
C. The standard (of iron).
D. The wedge (of wood).
E. The sole (of angle iron).
F. The share (of steel).
G. The breast (of sheet iron).

DESCRIPTION OF THE PLOUGH.

The characteristics of this plough are—

(i) *Cheapness*—it only costs Rs. 6 at Cawnpore, and could probably be made up by a Native *Mestri* for Rs. 4-8 or Rs. 5.

(ii) *Lightness in weight*—it only weighs 16 seers, and can, therefore, be easily carried on the ploughman's shoulder,

and *in draught*—it can easily be drawn by a pair of ordinarily good bullocks since its draught is only 62 seers on the bullocks, when ploughing at a depth of 5 inches in moderately light soils.

(iii) *Simplicity of construction*—it is made entirely of wrought iron and wood, so as to be easily repairable. All the iron work, except the share, can be purchased in any bazar, consisting as it does of a piece of angle-iron (for the sole), a strip of sheet iron (for the mould board), and an iron bar (for the standard).

The share is made of steel, and is, therefore, durable. When it has worn down it can be easily replaced by a new one, since it is attached in the simplest manner possible, and can easily be slipped on or off at any time.

There are no screws and nuts on the plough, and all attachments are effected by simple rivets.

(iv) *It can easily be adjusted*—so as to suit soils of any consistency or bullocks of any height.

76

DIRECTIONS FOR USE.

The plough is attached to the yoke by a rope fastened to the iron ring at the end of the beam.

The higher the bullocks are the longer the rope should be: the rope should also be longer in ploughing hard soils than in ploughing loose soils. The average length is from 7 feet 3 inches to 7 feet 9 inches. The length it should be in each case can be discovered in a few minutes experiment.

The plough should travel perfectly evenly on its sole, and should need no downward pressure on the handle to keep the heel down, nor lifting to keep the point down. For this purpose it will be necessary to *alter the adjustment*, if the bullocks are of a different height, or the soil of a different consistency to what the plough was intended for when sent out.

If the point of the plough has a tendency to dig down into the ground, and the plough travels on its point, take out the wooden *wedge* on the beam and shift the *standard* back along the *beam*, towards the *handle*.

This will lift the point up.

If on the other hand the point has a tendency to run up out of the ground, shift the *standard* forward along the *beam*.

This will depress the point.

If the plough be not properly adjusted, the draught is much heavier on the bullocks than it should be.

THE CAPABILITIES OF THE PLOUGH.

It will, with a pair of ordinarily good bullocks and one man (driving with reins fastened to the horns of the bullocks) plough ½ acre (=1 pucka Cawnpore bigha) in a day of 7 hours.

It inverts the soil to the depth of 5 inches and does not merely stir it. The advantages of thus inverting the soil are:—

(i) Any manure which has been spread is effectually buried.

(ii) All weeds are killed and so utilized as manure.

(iii) Fresh soil is brought up to the surface which, after some exposure, becomes in most cases more fertile than the upper crust was.

(iv) A greater depth of soft soil is secured than is possible with the native plough, except after 10 or 12 ploughings; and the soil absorbs water more readily and will need less artificial irrigation.

For the proper working of the plough it is necessary that the soil be in ploughing condition, *i. e.*, sufficiently damp for a native cultivator to plough it with his own plough.

☞ These ploughs are obtainable on application to the Office of Director, Department of Agriculture and Commerce, Cawnpore, at a price of Rs. 6 each.

The 14th September 1880.

No. 54.—It is hereby notified for public information that all the rights of the present jodidars and kayamguttadars in the undermentioned jodi and kayamgutta villages in the Hoskote Taluk of the Bangalore District, which have been duly attached in satisfaction of the arrears of revenue due to Government (as shewn in the subjoined statement) by the said jodidars and kayamguttadars, will be sold by public auction at the places and on the dates mentioned in the annexed statement. The sale will commence at 11 A. M. on the dates specified and the villages will be knocked down to the highest bidder without reserve.

2. Purchaser will be required to deposit 25 per cent of the purchase money at the time of sale, and where the remainder of the purchase money may not be paid within 15 days from the day of sale, the money so deposited shall be liable to forfeiture.

3. When such deposit shall not be made nor the remaining purchase money paid up, the lands shall be re-sold at the expense and risk of the first purchaser.

4. Persons bidding at the sale may be required to state whether they bid on their own account or as agents, and in the latter case to deposit a written authority signed by their principals, otherwise their bids will be rejected.

5. The sale shall be stayed, if the defaulter, or any other person acting on his behalf or claiming an interest in the land, tenders the full amount of the arrears of revenue with interest and other charges, provided such tender be made before sunset on the day previous to that appointed for the sale.

6. The sale of the property will not become absolute until the sale has been confirmed by the Chief Commissioner.

7. Purchasers having completed the payment of the purchase money will, as soon as the sale has been confirmed by the Chief Commissioner, be placed in immediate possession and the village will be registered in the name of the purchaser, and a certificate of sale signed and sealed by the Deputy Commissioner will be granted to him. It is to be distinctly understood that the Government are not responsible for errors of description and in estimated extent.

8. Provided parties deeming themselves aggrieved by the sale shall be at liberty to appeal to the Chief Commissioner within thirty days from the day of sale, and the purchase shall be conditional on the final order in such appeal.

Hobli.	Village.	Names of Jodidars and Kayamguttadars.	Boundaries of the Village.	Estimated Extent.	Estimated Beriz.	Quit-Rent payable annually to Government.	Arrears of Revenue for which the Village is to be sold. Years.	Amount.			Date of Sale, &c.
Sülbele.	Vanammanahalli.	Parvatabhat and Nanjundabhat.	*Jodi Villages.* Bounded on the north by Jodi Siddanahalli, south by Nanjapura, east by Tammarasanahalli, west by Bettahalli.	K. 15, K. 0, P. 0.	Rs. 52—0—0.	Rs. 47—0—0.	1878—79...	18	0	9	16th October 1880, at the Sülbele Kasba, before the Amildar.
							1879—80...	19	4	0	
							Total...	37	4	9	
	Krishnapura.	Parvatabhat and Nanjundabhat.	Bounded on the north by Belur, south by Yeddrikoipura, east by Narasapura, west by Appasandra.	K. 10, K. 0, P. 0.	34—0—0	31—0—0	1879—80	22	6	10	Do

Hobli.	Village.	Names of Jodidars and Kayamguttadars.	Boundaries of the Village.	Estimated Extent.	Estimated Beriz.	Quit-Rent payable annually to Government.	Arrears of Revenue for which the Village is to be sold. Years.	Amount.			Date of Sale, &c.
Sílbele.	Arasanahalli.	Krishna Rao, on behalf of Tulasi Bayi.	Bounded on the north by Ankonahalli, south by Kadaranpura, east by Battiganhalli, west by a river.	K. 10.	41—5—0.	21—0—0.	1876—77...	0	4	8	16th October 1880, at the Sílbele Kasba, before the Amildar.
							1877—78...	2	4	8	
							1878—79...	8	4	8	
							1879—80..	9	9	4	
							Total...	20	7	4	
	Bidiganhalli.	Annaiya Shastri.	Bounded on the north by Iruganahalli, south by Ivararasapura, east by the river Dakshinapinakini, west by Naganayakanhalli in the Devanhalli Taluk.	K. 21, C. 2, P. 1½.	91—0—0	84—0—0	1879—80...	33	3	0	Do
	Dasarahalli.	Srinivas Rao, &c., on behalf of Mangamma.	Bounded on the north by the bed of Hullur tank, south by Halasahalli, east by Gottipura, west by the bed of Hullur tank.	K. 12, C. 19.	53—4—8.	46—8—0.	1876—77...	15	11	3	Do
							1877—78...	5	11	9	
							1878—79...	22	2	3	
							1879—80...	22	6	9	
							Total...	66	0	0	
	Iruganahalli.	Narsimmabhatta and others.	Bounded on the north by Belavanahalli, south by Bidiganahalli, east by the river Dakshinapinakini, west by Gajaguppe in the Devanhalli Taluk.	K. 9, C. 8, P. 6½.	33—0—0	30—0—0	1876—77...	6	3	0	Do
							1877—78...	...	5	6	
							1878—79...	12	0	6	
							1879—80...	...	3	11	
							Total...	18	12	11	
	Tammarayasandra.	Krishnappa, Subbaihatta and others.	Bounded on the north by Srinivaspur, south by Palavanchi, east by Buvanahalli, west by Sesimakanahalli.	K. 18, C. 17, P. 14¾.	30—0—0	28—0—0	1876—77...	26	11	0	Do
							1877—78...	4	6	10	
							1878—79...	1	1	0	
							1879—80...	26	2	6	
							Total...	58	5	4	
	Sedenanahalli.	Kadi Rama Chari.	Bounded on the north by Kambadabidu and Kasipura, south by Bettahalli, east by Tammarasanahalli, west by Bettahalli.	K. 15, C. 13, P. ¾.	9—8—0	8—8—0	1876—77...	4	10	6	Do
							1877—78...	2	12	9	
							1878—79...	0	4	9	
							Total...	7	12	0	

Hobli.	Village.	Names of Jodidars and Kayamguttadars.	Boundaries of the Village.	Estimated Extent.	Estimated Rent.	Quit-Rent payable annually to Government.	Arrears of Revenue for which the Village is to be sold. Years.	Amount.			Date of Sale, &c.
Vagata.	Kurubaragollahalli.	Narsinga Rao and others.	Bounded on the north by Kurubarahosahalli in the Malur Taluk, south by Kamarasanahalli, east by Maratagondahalli, west by Govindapura.	K. 6.	37—13—11.	38—0—0.	1876—77...	34	14	11	On the 6th October 1880, at the Taluk Cutcherry, before the Amildar.
							1877—78...	34	14	11	
							1878—79...	35	4	7	
							1879—80...	23	12	9	
							Total... ..	128	15	2	
	Paramanahalli.	Nanjunda Bhatta, Seshagiri Rao and others.	Bounded on the north by Vagata Agrahara & Honachanahalli, south by Tarabahalli, east by Kamarasanahalli, west by Donkere.	K. 68.	256—5—1.	236—0—0	1877—78...	29	8	5	Do.
							1879—80...	48	8	8	
							Total...	78	1	1	
Kadgodi.	Halasahalli-Tippasandra.	Anekal Andanappa.	Bounded on the north by Chikkanekondi in the Bangalore Taluk, south by Hegondahalli, east by Dommasandra in the Anekal Taluk, west by Gunjur in the Bangalore Taluk.	K. 79, C. 6., P. 10½.	131—0—7.	126—3—0.	1876—77...	86	1	0	On the 6th October 1880, at the village before the Amildar.
							1878—79...	52	0	6	
								138	1	6	
	Kotur.	Shamachari and others.	Bounded on the north by Harohalli, south by Mutchandra, east by Mutchandra, west by Gulikayipura.	K. 14. C. 4.	65—1—6.	50—1—1.	1876—77...	14	0	6	On the 7th October 1880, at the village before the Amildar.
							1877—78...	8	0	1	
							1878—79..	11	15	10	
							1879—80...	0	5	9	
							Total...	34	6	2	
Súlbele.	Kadaranpura.	Munshi Krishnappa and Imam Sabi and Hyder Sabi, the enjoyees.	*Kayamgutta Villages.* Bounded on the north by Arasanahalli, south by Súlbele, east by Rampura, Súlbele, west by a river.	K. 11., C. 3., P. 0.	97—7—3.	97—0—0,	1877—78...	1	3	0	On the 15th October 1880, in the Súlbele Kasaba, before the Amildar.
							1878—79...	5	9	0	
							1879—80..	7	0	3	
								13	12	3	
	Yekarajpur.	Divakar Bhatta, Venkatesa Bhatta and others.	Bounded on the north by Chikkoli, south by Kamblipur, Gollahalli, east by Begur, west by Mutchandra.	K. 30.	80—0—0,	79—0—0.	1876—77...	55	0	3	Do.
							1877—78...	39	12	3	
							1878—79...	59	7	0	
							1879—80...	64	10	8	
								218	14	2	

Hobli.	Village.	Names of Jodidars and Kayamguttadars.	Boundaries of the Village.	Estimated Extent.	Estimated Beriz.	Quit-Rent payable annually to Government.	Arrears of Revenue for which the Village is to be sold. Years.	Amount.			Date of Sale, &c.
Sûlbele.	Kolala Chinnenahalli.	Subbamma.	Bounded on the north by Bhattrahalli in the Malur Taluk, south by Nandagudi, Gangapura, east by Chokkadasarahalli in the Malur Taluk, west by Guddada Chinnenahalli.	K. 10, C. 0.	26—7—7.	13—9—6.	1876—77...	13	9	6	On the 15th October, 1880 in the Sûlbele Kasba before the Amildar.
							1877—78...	13	9	6	
							1878—79...	13	9	6	
							1879—80...	14	0	6	
								54	13	0	
	Guddada Chinnenahalli.	Subbamma.	Bounded on the north by Goderamanahalli, south by Gangapur, east by Kolala Chinnenahalli, west by Markandahalli in the Kolar Taluk.	K. 6.	8—11—8	6—5—6	1876—77...	6	5	6	Do.
							1877—78..	6	5	6	
							1878—79...	6	5	6	
							1879—80...	6	9	3	
								25	9	9	
	Ittasandra.	Sinappa on behalf of Guttadar.	Bounded on the north by Valakunte plantation, south by Rama Govindapur, east by Nandagudi, west by Istur.	K. 108, C. 7, P. 8½.	362—14—7.	288—4—2.	1876—77...	288	4	3	Do.
							1877—78...	286	11	8	
							1878—79...	216	8	0	
								791	7	11	
	Dyavasandra.	Krishnappa.	Bounded on the north by Haniyur, south by Aralagere tank, east by Balenahalli, west by Chik Aralagere.	K. 10, C. 0.	158—14—10.	158—0—0.	1876—77...	10	11	2	Do.
							1878—79...	22	1	0	
							1879—80...	102	5	0	
								135	1	2	
	Kolami Ossur.	Pulumutti Subba Rao.	Bounded on the north by Narayandasarhalli in the Sidlagatta Taluk, south by Sanjivipur and Arakere, east by Chemmangala, Devanhalli Taluk, west by Hosa Nagamangala and Basapatna	K. 9, C. 0.	85—13—1.	48—7—3.	1876—77...	19	7	3	Do.
							1877—78...	20	3	3	
							1878—79...	19	5	3	
							1879—80..	50	2	10	
								109	2	7	
	Santanapura.	Venkanna.	Bounded on the north by Pottabarlu, south by Bettahalli tank, east by Kasipura, west by Votkatte of Iregrama and bed of the tank.	K. 15, C. 0.	29—1—5.	14—8—8.	1876—77 ..	15	0	10	Do.
							1878—79...	0	7	4	
							1879—80...	0	15	6	
								16	7	8	

Hobli.	Village.	Names of Jodidars and Kayamguttadars.	Boundaries of the Village.	Estimated Extent.	Estimated Beriz.	Quit-Rent payable annually to Government.	Arrears of Revenue for which the Village is to be sold. Years.	Amount.			Date of Sale, &c.
	Bairasandra.	Vasudevachari.	Bounded on the north by Sonnenahalli in the Malur Taluk, south by Uddappanahalli in the Malur Taluk, east by Belur in do., west Chokarasanahalli in do.	K. 23., C. 15.	139—16—2.	139—10—2.	1876—77 1877—78 1878—79 1879—80	2 18 88 100 209	7 0 0 8 0	8 2 2 2 2	On the 18th October 1880, at Nandagudi before the Amildar.
Nandagudi.	Sivanapura.	Krishna Rao.	Bounded on the north by Gullenahalli and Badenahalli, south by Bhimapura, east by Sonniganahalli and Birahalli, west by Kanjiranahalli and Koradarhalli.	K. 47., C. 4. P. 12.	1,060—12—11	695—0—0	1876—77 1877—78 1878—79 1879—80	280 30 22 68 401	2 10 2 11 9	0 0 0 2 2	On 20th, 21st, and 22nd October 1880, at the Taluk Office before the Amildar.
	Bhimapura.	Sitaramaiya.	Bounded on the north by Sivanapura, south by Marenahalli, east by Bingipura, west by Itiyatanhalli.	K. 41. C. 2. P. 1.	418—7—7	252—0—0	1876—77 1877—78 1878—79 1879—80	7 7 11 95 121	5 5 9 10 14	3 3 9 0 3	
Vagala.	Doddatagali.	Mahadeva Rao.	Bounded on the north by Injanahalli and Appasandra, south by Chikatagali, Channigarayapura, east by Alagondahalli, west by Marenahalli and Injanahalli.	K. 35. C. 14. P. 3.	590—4—8	186—0—0	1877—78 1878—79 1879—80	133 192 87 413	5 8 10 8	10 8 0 6	
	Mutakur.	Kasipataiya, Nagam Bhatta, &c.	*Jodi Villages.* Bounded on the north by Dannasandra and Hemmandahalli, south by a river, east by Anagondahalli, west by Harohalli.	K. 70.	204—0—0	188—0—0	1876—77 1877—78 1878—79 1879—80	54 14 77 87 233	7 4 5 7 9	8 5 8 8 5	
	Byalahalli.	Rama Bhatta.	Bounded on the north by Yedagondahalli, south by Belekere, east by Araballi, west by Mutkur Tank.	K. 49. C. 2. P. 1.	117—0—0	107—0—0	1876—77 1879—80	17 6 23	0 5 5	0 2 2	
	Muttakadahalli.	Visvanatha Shastri.	Bounded on the north by Byalahalli, south by Guttahalli, east by Arahalli and Guttahalli, west by Byalahalli.	K. 8.	39—0—0	36—0—0	1876—77 1879—80	18 38 57	10 7 1	6 0 6	

The 17th September 1880.

No. 55.—It is hereby notified that the jodi inam villages of the Kunigal, Túmkúr, Koratagere, Chiknayakanhalli and Maddagiri Taluks in the Túmkúr District (hereunder more fully described), which have been duly attached for arrears of quit-rent and local cesses due to Government by the jodidars, will be sold by public auction at the Deputy Commissioner's Office at Túmkúr on the 18th October 1880: the sale will commence at 11 A. M. on that date and be knocked down to the highest bidder at 5. P. M. on the same day.

2. Provided that when a village is divided into separate recognized vrittis, the Deputy Commissioner may at his option, instead of selling the village as a whole, sell each vritti separately.

3. The annual quit-rent (excluding irrigation and local cesses) payable by the purchaser on the jodi villages in question is shewn in detail in the statement at foot.

4. Purchasers will be required to deposit 25 per cent of the purchase money at the time of sale, and the remainder of the purchase money at such time as may be fixed by the Deputy Commissioner in each case at the time of sale. If the remainder of the purchase money be not accordingly paid, money so deposited shall be liable to forfeiture.

5. When such deposit shall not be made or when the remaining purchase money shall not be paid within 15 days of the day of sale, the property in question shall be re-sold at the expense and risk of the first purchaser.

6. Persons bidding at a sale may be required to state whether they bid on their own account, or as agents, and in the latter case to deposit a written authority signed by the principals, otherwise their bids may be rejected.

7. The sale shall be stayed, if the defaulter, or any person acting on his behalf or claiming an interest in the property, tenders the full arrears of revenue with interest and other charges, provided such tenders be made before sunset on the day previous to that appointed for the sale.

8. Purchasers having completed the payment of the purchase money will be placed in immediate possession, and the village will be registered in the name of the purchaser and a certificate of sale signed and sealed by the Deputy Commissioner will be granted to him. It is to be distinctly understood that the Government are not responsible for errors of description or in estimated extent or income.

9. Provided that parties deeming themselves aggrieved by the sale shall be at liberty to apply to the Deputy Commissioner within thirty days from the day of sale and the purchase shall be conditional on the final order on such application.

Taluk.	Village.	Names of Jodidars.	Descriptions of the Village.	Estimated Extent.	Estimated Gross Rental or Beriz.	Quit-Rent payable to Government.	Arrears of Government Revenue including Local Cesses for which the Village is to be sold.			
							Years.	Amount.		
Kunigal.	Chikka Kempa Ságara jodi village.	Krishna Shastri and 6 others.	Situated in the Huliyurdurga Sammat. Bounded on the north by Madugonahalli, on the south by Torehalla, on the east by Hosahalli, on the west by Kichavadi.	A. 186, C. 63.	Rs. 70—0—0.	27—0—0.	Dhatu ...	12	3	0
							Isvara ...	29	3	0
							Bahudhanya.	29	3	0
							Framadi ...	31	6	0
								101	15	0

Taluk.	Village.	Names of Jodidars.	Descriptions of the Village.	Estimated Extent.	Estimated Gross Rental or Beriz.	Quit-Rent payable to Government.	Arrears of Government Revenue including Local Cesses for which the village is to be sold. Years.	Amount.		
Kunigal.	Hosahalli, jodi village.	Magadi Appavadhani and 30 others.	Situated in the Bedarhalli Sammat. Bounded on the north by Yelagalavadi, on the south by Dasanapura, on the east by Yelagalavadi, on the west by Yelachavadi and Yadahalli.	A. 361 C. 32.	Rs. 282—0—0.	„ 127—0—0.	Dhatu ... Pramadi ...	72 3	0 13	10 0
								75	13	10
	Halagere, jodi village.	Chikka Rama Shastri and 26 others.	Situated in the Amrutur Sammat. Bounded on the north by Hundalagere, on the south by Vaddarhalli, on the east by Honnamachanahalli and Doddaguni, on the west by Jinnagere, Settipura and Hundalagere.	A. 1,170 C. 49.	Rs. 784—15—6.	„ 491—12—0.	Dhatu ... Iswara ... Bahudhanya. Pramadi ...	20 47 48 23	9 10 13 0	4 8 8 0
								140	1	8
	Hundalagere, jodi village.	Narayanabhatta of Nagamangala and 5 others.	Situated in the Amrutur Sammat. Bounded on the north by Hosapalya and Bandihalli, on the south by Balekatte and Settipura, on the east by Korati and Balekatte, on the west by Bellagere and Hosapalya.	A. 526 C. 85.	Rs. 345—0—0.	Rs. 184—0—0.	Dhatu ... Iswara ... Bahudhanya. Pramadi ...	67 17 0 7	13 5 0 8	0 9 0 4
								92	11	1
	Ungra, jodi village.	Melkote Venkatrangachari and 11 others.	Situated in the Amrutur Sammat. Bounded on the north by Kilara and Kaggalahalli, on the south by river, on the east by Kaggalahalli and Puttarayanahalli, on the west by Yedavani.	A. 719 C. 52.	Rs. 314—0—0.	Rs. 173—0—0	Dhatu ... Iswara ... Pramadi ...	65 67 8	4 6 11	2 8 11
								140	12	9
	Kittamangala ½ share, jodi village.	Rangabhatta and 47 others.	Situated in the Kunigal Sammat. Bounded on the north by Kallupalya, on the south by Guntuganalli and Gujanalli, on the east by Kundur and Karekallu, on the west by Kittamangalada Amani Tank and Nagadiyat lands.	A. 225 C. 6.	Rs. 160—0—0.	Rs. 46—0—0	Dhatu ... Iswara ... Bahudhanya. Pramadi ...	24 43 1 56	6 6 0 0	5 9 0 0
								124	13	2

Taluk.	Village.	Names of Jodidars.	Descriptions of the Village.	Estimated Extent.	Estimated Gross Rental or Beriz.	Annual Quit-Rent payable to Government.	Arrears of Government Revenue including Local Cesses for which the Village is to be sold. Years.	Amount.		
Kunigal.	Nittur, ¼ share, jodi village.	Shankar Lingaiya and 6 others.	Situated in the Utridurga Sammat.	...	Rs. 220—0—0.	Rs. 72—0—0.	Dhatu ...	16	14	0
							Iswara ...	65	1	5
							Bahudhanya.	4	14	8
							Pramadi ...	15	3	9
								102	1	10
	Kempasagara, jodi village.	Sura Shastri and 41 others.	Situated in the Kottigere Sammat. Bounded on the north by Settigere, on the south by Nilattanahalli Ane and Kaval, on the east by Sunkigatta, on the west by Settigere.	...	Rs. 882—0—0	Rs. 390—0—0	Dhatu ..	417	9	0
							Iswara ...	417	9	0
							Bahudhanya.	301	5	0
							Pramadi ...	61	9	6
								1,198	0	6
	Nilattanahalli, ¼ share, jodi village.	Venkatrangachari and 21 others.	Situated in the Kottigere Sammat. Bounded on the north by Nilattanahalli Ane and Kaval, on the south by portion of Nilattanahalli village, on the east by Ajjagaudanapalya, on the west by Nilattanahalli Amani tank.	A. 136.	Rs. 152—15—10.	Rs. 62—0—0.	Dhatu ...	85	5	4
							Iswara ..	112	0	10
							Bahudhanya	66	12	6
							Pramadi ...	64	7	4
								328	10	0
	Krishnasagara, jodi village.	Dasambhatta and 28 others.	Situated in the Kunigal Sammat.	...	Rs. 500—0—0	Rs. 328—0—0	Dhatu ...	8	14	7
							Iswara ...	19	5	4
							Bahudhanya.	19	5	4
							Pramadi ...	20	7	6
								68	0	9
	Mangla, jodi village.	Melkote Anantachari.	Situated in the Yediyur Sammat. Bounded on the north by sunnada mara, on the south by Tiptur, on the east by Tubinakere, on the west by Markanahalli and Kodvatti.	A. 1,283.	Rs. 936—15—5.	Rs. 255—0—0	Dhatu ...	284	4	6
							Iswara ...	81	2	6
							Bahudhanya.	284	4	6
							Pramadi ...	198	9	0
								848	4	6
	Singonahalli and 2 Mudligiripalyas connected to do jodi village.	Nagasandra Devarbhatta and 19 others.	Situated in the Yediyur Sammat. Bounded on the north by Balakere, on the south by Singonahalli, on the east by Avargere, on the west by Nadamavinapur Anehanta.	A. 446, C. 26.	Rs. 386—9—5.	Rs. 109—0—0.	Dhatu ..	110	1	4
							Iswara ...	121	1	4
							Pahudhanya.	21	6	4
							Pramadi ...	24	2	7
								276	11	7

Taluk.	Village.	Names of Jodidars.	Descriptions of the Village.	Estimated Extent.	Estimated Gross Rental or Beriz.	Annual Quit-Rent payable to Government.	Arrears of Government Revenue including Local Cesses for which the Village is to be sold. Years.	Amount.		
Kunigal.	Hedegere, jodi village.	Surappa and 3 others.	Situated in the Yediyur Sammat. Bounded on the north by Arekere, on the south by Kotekere, on the east by Gunagere, on the west by Bidagere.	A. 353, C. 21.	250—0—0.	184—0—0.	Dhatu ... Iswara ... Bahudhanya.	191 191 90	13 13 10	0 0 6
								474	4	6
	Hudugalavadi and Ujini Channanadoddi connected to do jodi village.	Koppada Venkatappa and 13 others.	Situated in the Koppa Sammat. Bounded on the north by Koppa, on the south by Devastan Hosahalli, on the east by Chikkonahalli, on the west by Gulur Koppa.	A. 629, C. 49.	400—0—0.	310—0—0.	Dhatu ... Iswara ... Bahudhanya. Pramadi ...	130 322 172 145	8 8 8 0	7 0 0 0
								770	8	7
Maddagiri.	Kumsanalli, jodi village.	Venkatrambhatta, Suraiyabhatta and 36 others.	Situated in the Kodigenalli Sammat. Bounded on the north by Dodda Malur and Jogenalli, on the south by Kuradi and Hunusavadi, on the east by Dodda Malur and Bisalahalli, on the west by Kondavadi and Chikka Malur.	A. 2,882, C. 32.	1,672—2—9.	301—0—0.	Dhatu ... Iswara ... Bahudhanya. Pramadi ...	211 403 403 435	13 13 13 13	6 6 6 0
								1,455	5	6
	Bhairapura, jodi village.	1. Maddagiri Kondibhatta. 2. Venkatrambhatta. 3. Narasamma.	Situated in the Kodiginalli Sammat. Bounded on the north by Kalityapura, on the south by Malur and Dasarhalli, on the east by Kalityapura, on the west by Kodigenalli.	A. 211, C. 68.	50—0—0.	19—0—0.	Dhatu ... Iswara ... Bahudhanya. Pramadi ...	22 22 22 22	2 2 2 2	0 0 0 0
								88	8	0
	Adavi Naganahalli, jodi village.	Annaiyachar and 9 others.	Situated in the Kodigenalli Sammat. Bounded on the north by Suddekunte, on the south by Maitanahalli, on the east by Singanahalli, on the west by Tippapura.	A. 1,773, C. 58.	300—0—0	63—0—0	Dhatu .. Iswara ... Bahudhanya. Pramadi ...	... 40 31 5	... 11 12 6	... 6 0 0
								77	13	6
	Varadanahalli, kayamgutta village.	Naranabhatta and others.	Situated in the Kodigenalli Sammat. Bounded on the north by Dodda Dalivatta, on the south by Suddekunte, on the east by Chikka Dalivatta, on the west by Suddekunte.	A. 280	...	19—2—0	Dhatu ... Iswara ... Bahudhanya. Pramadi ...	2 12 7 0	0 14 6 1	8 8 2 8
								22	7	2

Taluk.	Village.	Names of Jodidars.	Descriptions of the Village.	Estimated Extent.	Estimated Gross Rental or Beriz.	Annual Quit-Rent payable to Government.	Arrears of Government Revenue including Local Cesses for which the Village is to be sold. Years.	Amount.		
Maddagiri	Mallenalli, jodi village.	Maddagiri Ramaseshabhatta and 9 others.	Situated in the Maddagiri Sammat. Bounded on the north by Samboganalli, Mutyanapalya, on the south by Sogutihalli, on the east by Sambonalli and Gondihalli, on the west by Poligatahalli and Bijavara.	A. 451, C. 26.	470—0—0.	339—0—0.	Dhatu ... Iswara ... Bahudhanya. Pramadi ...	179 264 379 382 1,206	7 10 15 12 13	1 11 3 6 9
	Viramanahalli, kayamgutta village.	1. Subba Pandita 2. Shama do 3. Venkatnarsappa.	Situated in the Maddagiri Sammat. Bounded on the north by Uddenalli, on the south by Janakalagutte, on the east by Settihallihalla, on the west by Namatagundu.	A. 50.	21—0—3	21—0—3	Dhatu ... Iswara ... Bahudhanya Pramadi ...	6 21 1 21 49	4 0 0 0 5	3 3 3 3 0
	Sivanagere, jodi village.	1. Ramanna 2. Venkatramachari 3. Annibhatta and 24 others.	Situated in the Rantavalalu Sammat. Bounded on the north by Hosahalli, on the south by Pittenalli, on the east by Gute village, on the west by Puttasandra of Sira Taluk.	A. 2,095, C. 14.	1,135—0—0.	346—0—0.	Dhatu ... Iswara ... Bahudhanya. Pramadi ...	289 365 281 183 1,119	2 5 8 3 3	8 0 6 9 11
	Gumpalahalli, jodi village.	Ramabhatta and 5 others.	Situated in the Midagesi Sammat. Bounded on the north by Tippagondanahalli, on the south by Guddata Timmanahalli jodi village, on the east by Bora Chikkanahalli, on the west by Arenalli.	A. 495, C. 90.	150—0—0.	54—0—0	Dhatu .. Iswara ... Bahudhanya. Pramadi ...	16 63 63 64 207	8 6 6 3 7	0 0 0 0 0
	Hanumantapura, kayamgutta village.	Venkannaiya and others.	Situated in the Puravara Sammat. Bounded on the north by Andralu, on the south by Bada Chaudanahalli, on the east by Kondavadi, on the west by river.	...	106—7—9	106—7—9	Dhatu ... Iswara .. Bahudhanya. Pramadi ...	25 54 57 3 141	13 3 13 10 8	6 3 5 3 5
Koratagere.	Kalavahalli, jodi village.	Gundabhatta and Bhaskara Rao.	Situated in the Kolal Sammat. Bounded on the north by Gedamanahalli, on the south by Karkalhalli, on the east by Sunkadahalli, on the west by Bavatanahalli.	A. 236, C. 18.	149—0—0.	82—4—0.		283	12	0

Taluk.	Village.	Names of Jodidars.	Descriptions of the Village.	Estimated Extent.	Estimated Gross Rental or Beriz.	Quit-Rent payable to Government.	Arrears of Government Revenue including Local Cesses for which the Village is to be sold. Years.	Amount.		
Chiknayakanhalli.	Kondaji, jodi village.	Krishna Shastri, Venkatesa Shastri and 72 others.	Situated in the Dandinasivara Sammat. Bounded on the north by tank, on the south by limit of Kadaba Taluk, on the east by Dombarahalli and Banterhalli villages, on the west by limit of Kadaba Taluk.	A. 2,737, C. 39.	2,632—12—0.	1,093—0—0	Dhatu ... Iswara ... Bahudhanya. Pramadi ...	951 76 598 1,125	8 2 2 12	0 0 0 0
								2,751	8	0
	Hulisandra, jodi village.	Subramanya Dikshita and 49 others.	Situated in the Dabbegatta Sammat. Bounded on the north by Horikaval, on the south by Dunda village, on the east by Bommanakere, on the west by Hosahalli.	A. 798, C. 50.	617—7—3.	370—4—0.	Dhatu ... Iswara ... Bahudhanya. Pramadi ...	389 379 134 154	8 8 8 7	9 9 5 4
								1,058	1	3
Tumkur.	Mullukunte, jodi village.	Lakshmi Narasimmaiyabhatta and 48 others.	Situated in the Honnudike Sammat. Bounded on the north by Virupasandra and Viranayakanhalli villages, on the south and west by Chikkapura and Honasagere villages, on the east by Honnudike and Anapanahalli villages.	A. 776, C. 39.	1,040—5—0.	308—0—0.	Dhatu ... Iswara ... Bahudhanya Pramadi ...	141 247 354 297	1 15 9 1	5 4 9 7
								1,040	12	1
	Puttasandra, jodi village.	1. Devarayadurga Narasimhaswami. 2. Sivaram Shastri. 3. Bhairavabhatta and 56 others.	Situated in the Urdigere Sammat. Bounded on the north by Virapura and Lingapura, on the south by Bhairasandra and Tigalarahalli, on the east by Menasandra and Singalipura of Koratagere Taluk, on the west by Dundanahalli and Marachanahalli.	A. 1,075, C. 38.	1,201—9—7.	582—0—0	Dhatu ... Iswara ... Bahudhanya. Pramadi ...	395 423 192 398	0 12 4 0	0 0 11 0
								1,409	0	11

The 23rd September 1880.

No. 56.—It is hereby notified for public information that all the rights of the present jodidars in the undermentioned jodi village in the Hoskote Taluk of the Bangalore District, which has been duly attached in satisfaction of the arrears of revenue due to Government (as shewn in the subjoined statement) by the said jodidars, will be sold by public auction at the village before the Amildar on the 26th October 1880. The sale will commence at 11 A. M. on that date and the village will be knocked down to the highest bidder without reserve.

2. Purchasers will be required to deposit 25 per cent of the purchase money at the time of sale, and where the remainder of the purchase money may not be paid within 15 days from the day of sale, the money so deposited shall be liable to forfeiture.

3. When such deposit shall not be made, nor the remaining purchase money paid up, the lands shall be resold at the expense and risk of the first purchaser.

4. Persons bidding at the sale may be required to state whether they bid on their own account or as agents, and in the latter case, to deposit a written authority signed by their principals, otherwise their bids may be rejected.

5. The sale shall be stayed, if the defaulter, or any other person acting on his behalf or claiming an interest in the land, tenders the full amount of arrears of revenue with the interest and other charges, provided such tender be made before sunset on the day previous to that appointed for the sale.

6. The sale of the property will not become absolute until the sale has been confirmed by the Chief Commissioner.

7. Purchasers having completed the payment of the purchase money will, as soon as the sale has been confirmed by the Chief Commissioner, will be placed in immediate possession, and the village will be registered in the name of the purchaser, and a certificate of sale signed and sealed by the Deputy Commissioner will be granted to him. It is to be distinctly understood that the Government are not responsible for errors of description and in estimated extent.

8. Provided parties deeming themselves aggrieved by the sale shall be at liberty to appeal to the Chief Commissioner within 30 days from the day of sale, and the purchase shall be conditional on the final order in such appeal.

Hobli.	Village.	Names of Jodidars.	Boundaries of the Village.	Estimated Extent.			Estimated Deriz.			Quit-Rent payable annually to Government.			Arrears of Government Revenue for which Village is to be sold.			
													Years.	Amount		
				K.	K.	P.	R.	A.	P.	R.	A.	P.				
Mugalur.	Bagur.	Vasudevachar and Shamachar.	Bounded on the north by Ganagalur, on the south by Gundur, on the east by Marangere, on the west by jodi Tiruvaranga village.	37	15	10¼	193	5	9	193	5	4	Dhatu ...	93	5	9
													Isvara ...	93	5	9
													Bahudhanya.	93	5	9
													Pramadi ..	193	5	4
													Total.....	473	6	7

N. B.—The sale includes the tamarind, mango, honge, and ippe trees in the village.

The 28th September 1880.

No. 58.—D. Venkatappaiya, Probationary Amildar of the Betmangala Taluk, is confirmed in the appointment.

The 29th September 1880.

No. 59.—The following promotion, transfers and appointment of Amildars are ordered:—

Promotion.—Mr. J. G. North, 2nd Grade Amildar of the Mysore Taluk, to be Amildar of the 1st Grade, *vice* Garudachar retired.

Transfers and Appointment.—D. Shama Rao, Amildar of the Dodballapur Taluk, to be Amildar of the Bangalore Taluk, *vice* Garudachar retired.

Venkat Rao, Amildar of the Nelamangala Taluk, to be Amildar and 3rd Class Magistrate of the Dodballapur Taluk, *vice* Shama Rao.

K. Ramachandra Rao, late Manager of the Nagar Division Commissioner's Office, is appointed Amildar of the 2nd Grade and posted to the Nelamangala Taluk, but will continue to act as Assistant Commissioner of the Shimoga District until further orders.

By Order,

C. RANGACHARLU,
Revenue Secretary.

PUBLIC WORKS DEPARTMENT.

NOTIFICATIONS.

The 25th September 1880.

No. 27.—Mr. F. J. McLaughlin, Officiating Executive Engineer, Shimoga Division, passed the Departmental Standard examination prescribed in Para 21, Chapter II, Section 1 of the Revised Public Works Code, on the 17th September 1880.

The 28th September 1880.

No. 28.—Mr. A. S. Nagarkar, Assistant Engineer 3rd Grade, passed the Colloquial examination prescribed in Public Works Code, Chapter II, Section I, Para XX, on the 17th September 1880.

By Order,

C. BOWEN, *Major*, R. E.,
Offg. Secretary, P. W. D.

Notifications by the Chief Commissioner of Coorg.

GENERAL.

NOTIFICATIONS.

The 25th September 1880.

No. 15.—The following correspondence is published for general information :—

Home, Revenue and Agricultural Department, Public, Notification No. 1410, dated Simla, the 16th September 1880.

The following despatch from Her Majesty's Secretary of State for India and its enclosure are published for general information :—

No. 65 (Public), dated India Office, London, the 29th July 1880.
From—The Secretary of State for India,
To—The Government of India.

I FORWARD, for the information of Your Excellency in Council, and for publication in India, copy of a letter* received by me from the Honorary Secretary of "The Princess Alice (Darmstadt) Memorial Fund", communicating Her Majesty's appreciation of the loyalty and sympathy evinced by those residents in India who have contributed to this Memorial Fund.

*From Revd. T. Teignmouth Shore, dated 16th July 1880.

Dated London, the 16th July 1880.

From—Revd. T. Teignmouth Shore, Honorary Secretary of the "Princess Alice Memorial Fund."

To—The Right Hon'ble the Secretary of State for India.

THE Private Secretary of the late Viceroy of India having forwarded to "The Princess Alice (Darmstadt) Memorial Fund" the large sum of £3,660, I have had the honor of communicating the fact to the Queen, and Her Majesty was graciously pleased to express to me "her sincere appreciation of this gratifying mark of loyalty to herself and of sympathy with her in her grief."

I am sure it will be acceptable to the many in India who have contributed to the Fund to know how much Her Majesty the Queen and Empress has appreciated their generosity, and I have therefore troubled you with this letter, which I trust you will do me the honor of communicating to His Excellency the Viceroy.

No. 39—1419.

COPY forwarded to the Local Governments and Administrations noted on the margin for information and for publication in the local Gazettes.

Madras.	North-Western Provinces and Oudh.	Central Provinces.	Hyderabad.
Bombay.	Panjab.	British Burma.	Coorg.
Bengal.		Assam.	

The 28th September 1880.

No. 16.—The following Bye-law for the Municipalities of Fraserpet, Somavarpet, and Kodlipet having been sanctioned by the Chief Commissioner is published for general information :—

The Bye-law will be No. 89 for the Fraserpet Municipality, No. 89 for the Somavarpet Municipality, and No. 87 for the Kodlipet Municipality.

That no lanthana shall be hereafter allowed to be grown or planted within the Municipal limits either for hedges or for other purposes, and that all lanthana which is not now used for hedges shall be uprooted.

Where lanthana is used for hedges it must be kept properly trimmed and not allowed to grow more than 4 or 5 feet in height.

Notices will be served by the Municipality on the owners or occupiers of all lands on which lanthana is now grown, requiring them to uproot it within three months from the date of the notice, and warning them that if they fail to comply with the notice the lanthana will be uprooted by the Municipality and the cost recovered as if it were a balance of land revenue.

Notices will also be issued from time to time to the owners or occupiers of lands whose hedges may not be properly trimmed, requiring them to have the hedges cut and trimmed within 15 days, and warning them that in the event of the hedges not being cut and trimmed within 15 days that the lanthana will be uprooted by the Municipality and the cost recovered as if it were a balance of land revenue.

By Order,

W. J. CUNINGHAM,
Secretary.

Notifications, &c., by the Government of India.

PUBLIC WORKS DEPARTMENT.

NOTIFICATION.

Simla, the 17th September 1880.

No. 307.—To fill a vacancy existing in the Engineer Establishment, Railway Branch, Mr. W. McHutchin is promoted from 2nd to 1st Grade Assistant Engineer, with effect from 14th September 1880.

ALEX. FRASER, *Major-Genl.*, R. E.,
Secy. to the Govt. of India.

THE

MYSORE GAZETTE.

No. 40 Published by Authority. of 1880.

BANGALORE, SATURDAY, OCTOBER 9, 1880.

Separate paging is given to this Part in order that it may be filed as a separate compilation.

CONTENTS.

PAGE.

PART I.—Notifications by the Chief Commissioner of Mysore and Coorg.—Notifications by the Government of India... 275—295

PART II.—Notifications, &c., by the Judicial Commissioner; Survey and Settlement Commissioner; Superintendent of Inam Settlements; Deputy Accountant General; Public Works Officers; Military Assistant; Inspector General of Registration; Director of Public Instruction; Deputy Surgeon General of Hospitals; Anche Bakshi; President of the Bangalore Municipal Boards; District and Sessions Judges; Deputy Commissioners of Districts.—Season Reports; Meteorological Registers; Postal Notices, &c. ... ... 505—512

PART III.—Acts and Bills of the Governor Genl. of India in Council, &c. Nil.

PART IV.—Miscellaneous Papers ... ... Nil.

SUPPLEMENT.—Abstract of Season or Intermediate Reports, &c. 1—2

PART I.

Notifications by the Chief Commissioner of Mysore.

GENERAL DEPARTMENT.

NOTIFICATIONS.

The 2nd October 1880.

No. 105.—Ranganna, Amildar, Nagamangala Taluk, Hassan District, is invested with the powers of a Magistrate of the 2nd Class, and with the additional powers referred to in Section 25, Clause (*a*) of the Code of Criminal Procedure, with the exception of—

(3.) Power to entertain without complaint cases which he has jurisdiction to try or to commit for trial.

No. 106.—Mr. Abdul Rahiman, Revenue Assistant Commissioner, Shimoga District, availed himself on the morning of the 16th August 1880, of the privilege leave for six weeks granted to him in Chief Commissioner's Notification No. 84, dated 5th idem, and returned to duty on the 27th September last (forenoon).

The 4th October 1880.

No. 107.—Subject to the approval of the Government of India, Colonel C. A. Benson, Commanding Bangalore Rifle Volunteers, is appointed to officiate as Military Assistant to the Chief Commissioner, in addition to his other duties, during the absence on furlough of Lieutenant-Colonel R. C. Stewart, or until further orders.

No. 108.—Mr. E. Sidney Smith is appointed to be Public Prosecutor of the Nundydroog Division during the absence on leave of Mr. Nepean Smith, or until further orders.

No. 109.—Mr. N. Chelviengar, General Assistant Commissioner, delivered over, and Mr. V. P. Madhava Rao, B. A., Subordinate Judge of the Hassan District, received, charge of the Hassan District Treasury, on the forenoon of the 29th September 1880.

The 7th October 1880.

No. 110.—Mr. P. N. Krishna Múrti, 4th Grade Deputy Commissioner, to be posted to the Hassan District, on Special Duty connected with the Census and Jamabandi.

Mr. G. F. Meiklejohn, Assistant Superintendent, Mysore Revenue Survey, to act as 4th Grade Deputy Commissioner and Magistrate of the Kadur District, from the date of Mr. Krishna Múrti's return to duty and during his absence from the Kadur District, or until further orders.

By Order,

W. J. CUNINGHAM,
Secretary.

REVENUE DEPARTMENT.

NOTIFICATIONS.

The 14th September 1880.

No. 54.—It is hereby notified for public information that all the rights of the present jodidars, and kayamguttadars in the undermentioned jodi and kayamgutta villages in the Hoskote Taluk of the Bangalore District, which have been duly attached in satisfaction of the arrears of revenue due to Government (as shewn in the subjoined statement) by the said jodidars and kayamguttadars, will be sold by public auction at the places and on the dates mentioned in the annexed statement. The sale will commence at 11 A. M. on the dates specified and the villages will be knocked down to the highest bidder without reserve.

2. Purchaser will be required to deposit 25 per cent of the purchase money at the time of sale, and where the remainder of the purchase money may not be paid within 15 days from the day of sale, the money so deposited shall be liable to forfeiture.

3. When such deposit shall not be made nor the remaining purchase money paid up, the lands shall be re-sold at the expense and risk of the first purchaser.

4. Persons bidding at the sale may be required to state whether they bid on their own account or as agents, and in the latter case to deposit a written authority signed by their principals, otherwise their bids will be rejected.

5. The sale shall be stayed, if the defaulter, or any other person acting on his behalf or claiming an interest in the land, tenders the full amount of the arrears of revenue with interest and other charges, provided such tender be made before sunset on the day previous to that appointed for the sale.

6. The sale of the property will not become absolute until the sale has been confirmed by the Chief Commissioner.

7. Purchasers having completed the payment of the purchase money will, as soon as the sale has been confirmed by the Chief Commissioner, be placed in immediate possession and the village will be registered in the name of the purchaser, and a certificate of sale signed and sealed by the Deputy Commissioner will be granted to him. It is to be distinctly understood that the Government are not responsible for errors of description and in estimated extent.

8. Provided parties deeming themselves aggrieved by the sale shall be at liberty to appeal to the Chief Commissioner within thirty days from the day of sale, and the purchase shall be conditional on the final order in such appeal.

Hobli.	Village.	Names of Jodidars and Kayamguttadars.	Boundaries of the Village.	Estimated Extent.	Estimated Beriz.	Quit-Rent payable annually to Government.	Arrears of Revenue for which the Village is to be sold. Years.	Amount.			Date of Sale, &c.
Sülbele.	Vanammanahalli.	Parvatabhat and Nanjundabhat.	*Jodi Villages.* Bounded on the north by Jodi Siddanahalli, south by Nanjapura, east by Tammarasanahalli, west by Bettahalli.	K. 15, K. 0, P. 0.	Rs. 52—0—0.	Rs. 47—0—0.	1878—79...	18	0	9	16th October 1880, at the Sülbele Kasba, before the Amildar.
							1879—80...	19	4	0	
							Total...	37	4	9	
	Krishnapura.	Parvatabhat and Nanjundabhat.	Bounded on the north by Belur, south by Yeddrikoipura, east by Narasapura, west by Appasandra.	K. 10, K. 0, P. 0.	34—0—0	31—0—0	1879—80	22	6	10	Do
	Arasanahalli.	Krishna Rao, on behalf of Tulasi Bayi.	Bounded on the north by Ankonahalli, south by Kadaranpura, east by Battiganhalli, west by a river.	K. 10.	41—5—0.	21—0—0.	1876—77...	0	4	8	Do
							1877—78...	2	4	8	
							1878—79...	8	4	8	
							1879—80...	9	9	4	
							Total...	20	7	4	
	Bidiganhalli.	Annaiya Shastri.	Bounded on the north by Iruganahalli, south by Ivararasapura, east by the river akshinapinakini, west by aganayakanhalli in the Devanhalli Taluk.	K. 21, C. 2, P. 1½	91—0—0	84—0—0	1879—80...	33	3	0	Do

Hobli.	Village.	Names of Jodidars and Kayamguttadars.	Boundaries of the Village.	Estimated Extent.	Estimated Rent.	Quit-Rent payable annually to Government.	Arrears of Revenue for which the Village is to be sold. Years.	Amount.			Date of Sale, &c.
Súlbele.	Dasarahalli.	Srinivas Rao, &c., on behalf of Mangamma.	Bounded on the north by the bed of Hullur tank, south by Halasahalli, east by Gottipura, west by the bed of Hullur tank.	K. 12, C. 19.	53—4—3.	46—8—0.	1876—77...	15	11	3	16th October 1880, at the Súlbele Kasba, before the Amildar.
							1877—78...	5	11	9	
							1878—79...	22	2	3	
							1879—80...	22	6	9	
							Total...	66	0	0	
	Irruganahalli.	Narsimmabhatta and others.	Bounded on the north by Belavanahalli, south by Bidiganahalli, east by the river Dakshinapinakini, west by Gajaguppe in the Devanhalli Taluk.	K. 9, C. 8, P. 6½.	35—0—0	30—0—0	1876—77...	6	3	0	Do
							1877—78...	...	5	6	
							1878—79...	12	0	6	
							1879—80...	...	3	11	
							Total...	18	12	11	
	Tammarayasandra.	Krishnappa, Subbabhatta and others.	Bounded on the north by Srinivaspur, south by Palavanchi, east by Buvanahalli, west by Sesimakanahalli.	K. 18, C. 17, P. 14¾.	30—0—0	28—0—0	1876—77...	26	11	0	Do
							1877—78...	4	6	10	
							1878—79...	1	1	0	
							1879—80...	26	2	6	
							Total...	58	5	4	
	Sedenanahalli.	Kadi Rama Chari.	Bounded on the north by Kambadabidu and Kasipura, south by Bettahalli, east by Tammarasanahalli, west by Bettahalli.	K. 15, C. 13, P. ¾.	9—8—0	8—8—0	1876—77...	4	10	6	Do
							1877—78...	2	12	9	
							1878—79..	0	4	9	
							Total...	7	12	0	
	Kadarampura.	Munshi Krishnappa and Imam Sabi and Hyder Sabi, the enjoyees.	*Kayamgutta Villages.* Bounded on the north by Arasanahalli, south by Súlbele, east by Rampura, Súlbele, west by a river.	K. 11, C. 3, P. 0.	97—7—3.	97—0—0.	1877—78...	1	3	0	On the 15th October 1880, in the Súlbele Kasaba, before the Amildar.
							1878—79...	5	9	0	
							1879—80..	7	0	3	
								13	12	3	
	Yekarajpur.	Divakar Bhatta, Venkatesa Bhatta and others.	Bounded on the north by Chikkoli, south by Kamblipur, Gollahalli, east by Begur, west by Mutchandra.	K. 30.	80—0—0.	79—0—0.	1876—77...	55	0	3	Do.
							1877—78...	39	12	3	
							1878—79...	59	7	0	
							1879—80...	64	10	8	
								218	14	2	

96

Hobli.	Village.	Names of Jodidars and Kayamguttadars.	Boundaries of the Village.	Estimated Extent.	Estimated Beriz.	Quit-Rent payable annually to Government.	Arrears of Revenue for which the Village is to be sold. Years.	Amount.			Date of Sale, &c.
Sülbele.	Kolala Chinnenahalli.	Subbamma.	Bounded on the north by Bhattrahalli in the Malur Taluk, south by Nandagudi, Gangapura, east by Chokkadasarahalli in the Malur Taluk, west by Guddada Chinnenahalli.	K. 10, C. 0.	26—7—7.	13—9—6.	1876—77...	13	9	6	On the 15th October 1880 in the Sülbele Kasba before the Amildar.
							1877—78...	13	9	6	
							1878—79...	13	9	6	
							1879—80...	14	0	6	
								54	13	0	
	Guddada Chinnenahalli.	Subbamma.	Bounded on the north by Goderamanahalli, south by Gangapur, east by Kolala Chinnenahalli, west by Markandahalli in the Kolar Taluk.	K. 6.	8—11—8	6—5—6	1876—77...	6	5	6	Do.
							1877—78..	6	5	6	
							1878—79...	6	5	6	
							1879—80...	6	9	3	
								25	9	9	
	Ittasandra.	Sinappa on behalf of Guttadar.	Bounded on the north by Valakunte plantation, south by Rama Govindapur, east by Nandagudi, west by Istur.	K. 108, C. 7, P. 84.	362—14—7.	288—4—2.	1876—77...	288	4	3	Do.
							1877—78...	286	11	8	
							1878—79...	216	8	0	
								791	7	11	
	Dyavasandra.	Krishnappa.	Bounded on the north by Haniyur, south by Aralagere tank, east by Balenahalli, west by Chik Aralagere.	K. 10, C. 0.	158—14—10.	158—0—0.	1876—77...	10	11	2	Do.
							1878—79...	22	1	0	
							1879—80...	102	5	0	
								135	1	2	
	Kolani Ossur.	Pulumutti Subba Rao.	Bounded on the north by Narayandasarhalli in the Sidlagatta Taluk, south by Sanjivipur and Arakere, east by Chemmangala, Devanhalli Taluk, west by Hosa Nagamangala and Basapatna	K. 9, C. 0.	85—13—1.	48—7—3.	1876—77...	19	7	3	Do.
							1877—78...	20	3	3	
							1878—79...	19	5	3	
							1879—80..	50	2	10	
								109	2	7	
	Santanapura.	Venkanna.	Bounded on the north by Pottabarlu, south by Bettahalli tank, east by Kasipura, west by Votkatte of Iregrama and bed of the tank.	K. 15, C. 0.	29—1—5.	14—8—8.	1876—77..	15	0	10	Do.
							1878—79...	0	7	4	
							1879—80...	0	15	6	
								16	7	8	

Hobli.	Village.	Names of Jodidars and Kayamguttadars.	Boundaries of the Village.	Estimated Extent.	Estimated Beriz.	Quit-Rent payable annually to Government.	Arrears of Revenue for which the Village is to be sold. Years.	Amount.			Date of Sale, &c.
	Bairasandra.	Vasudevachari.	Bounded on the north by Sonnenahalli in the Malur Taluk, south by Uddappanahalli in the Malur Taluk, east by Belur in do., west Chokarasanahalli in do.	K. 23, C. 15.	139—10—2.	139—10—2.	1876—77 1877—78 1878—79 1879—80	2 18 88 100 209	7 0 0 8 0	8 2 2 2 2	On the 18th October 1880, at Nandagudi before the Amildar.
Nandagudi.	Sivanapura.	Krishna Rao.	Bounded on the north by Gullenahalli and Badenahalli, south by Bhimapura, east by Sonniganahalli and Birahalli, west by Kanjiranahalli and Koradarhalli.	K. 47, C. 4, P. 12.	1,060—12—11	695—0—0	1876—77 1877—78 1878—79 1879—80	280 30 22 68 401	2 10 2 11 9	0 0 0 2 2	On 20th, 21st, and 22nd October 1880, at the Taluk Office before the Amildar.
	Bhimapura.	Sitaramaiya.	Bounded on the north by Sivanapura, south by Marenahalli, east by Bingipura, west by Itiyatanhalli.	K. 41, C. 2, P. 1.	418—7—7	252—0—0	1876—77 1877—78 1878—79 1879—80	7 7 11 95 121	5 5 9 10 14	3 3 9 0 3	
Vagala.	Doddatagali.	Mahadeva Rao.	Bounded on the north by Injanahalli and Appasandra, south by Chikatagali, Channigarayapura, east by Alagondahalli, west by Marenahalli and Injanahalli.	K. 35, C. 14, P. 3.	590—4—8	186—0—0	1877—78 1878—79 1879—80	133 192 87 413	5 8 10 8	10 8 0 6	
	Mutakur.	Kasipataiya, Nágam Bhatta, &c.	*Jodi Villages.* Bounded on the north by Dannasandra and Hemmardahalli, south by a river, east by Anagondahalli, west by Harohalli.	K. 70.	204—0—0	188—0—0	1876—77 1877—78 1878—79 1879—80	54 14 77 87 233	7 4 5 7 9	8 5 8 8 5	
	Byalahalli.	Rama Bhatta.	Bounded on the north by Yedagondahalli, south by Belekere, east by Arahalli, west by Mutkur Tank.	K. 49, C. 2, P. 1.	117—0—0	107—0—0	1876—77 1879—80	17 6 23	0 5 5	0 2 2	
	Muttakadahalli.	Visvanatha Shastri.	Bounded on the north by Byalahalli, south by Guttahalli, east by Arahalli and Guttahalli, west by Byalahalli.	K. 8.	39—0—0	36—0—0	1876—77 1879—80	18 38 57	10 7 1	6 0 6	

98

The 17th September 1880.

No. 55.—It is hereby notified that the jodi inam villages of the Kunigal, Túmkúr, Koratagere, Chiknayakanhalli and Maddagiri Taluks in the Túmkúr District (hereunder more fully described), which have been duly attached for arrears of quit-rent and local cesses due to Government by the jodidars, will be sold by public auction at the Deputy Commissioner's Office at Túmkúr on the 18th October 1880: the sale will commence at 11 A. M. on that date and be knocked down to the highest bidder at 5. P. M. on the same day.

2. Provided that when a village is divided into separate recognized vrittis, the Deputy Commissioner may at his option, instead of selling the village as a whole, sell each vritti separately.

3. The annual quit-rent (excluding irrigation and local cesses) payable by the purchaser on the jodi villages in question is shewn in detail in the statement at foot.

4. Purchasers will be required to deposit 25 per cent of the purchase money at the time of sale, and the remainder of the purchase money at such time as may be fixed by the Deputy Commissioner in each case at the time of sale. If the remainder of the purchase money be not accordingly paid, money so deposited shall be liable to forfeiture.

5. When such deposit shall not be made or when the remaining purchase money shall not be paid within 15 days of the day of sale, the property in question shall be re-sold at the expense and risk of the first purchaser.

6. Persons bidding at a sale may be required to state whether they bid on their own account, or as agents, and in the latter case to deposit a written authority signed by the principals, otherwise their bids may be rejected.

7. The sale shall be stayed, if the defaulter, or any person acting on his behalf or claiming an interest in the property, tenders the full arrears of revenue with interest and other charges, provided such tenders be made before sunset on the day previous to that appointed for the sale.

8. Purchasers having completed the payment of the purchase money will be placed in immediate possession, and the village will be registered in the name of the purchaser and a certificate of sale signed and sealed by the Deputy Commissioner will be granted to him. It is to be distinctly understood that the Government are not responsible for errors of description or in estimated extent or income.

9. Provided that parties deeming themselves aggrieved by the sale shall be at liberty to apply to the Deputy Commissioner within thirty days from the day of sale and the purchase shall be conditional on the final order on such application.

Taluk.	Village.	Names of Jodidars.	Descriptions of the Village.	Estimated Extent.	Estimated Gross Rental or Beriz.	Quit-Rent payable to Government.	Arrears of Government Revenue including Local Cesses for which the Village is to be sold.			
							Years.	Amount.		
Kunigal.	Chikka Kempa Ságara jodi village.	Krishna Shastri and 6 others.	Situated in the Huliyurdurga Sammat. Bounded on the north by Madugonahalli, on the south by Torehalla, on the east by Hosahalli, on the west by Kichavadi.	A. 186, C. 63.	Rs. 70—0—0.	„ 27—0—0.	Dhatu ... Isvara ... Bahudhanya. Pramadi ...	12 29 29 31	3 3 3 6	0 0 0 0
								101	15	0

Taluk.	Village.	Names of Jodidars.	Descriptions of the Village.	Estimated Extent.	Estimated Gross Rental or Beriz.	Quit-Rent payable to Government.	Arrears of Government Revenue including Local Cesses for which the village is to be sold. Years.	Amount.		
Kunigal.	Hosahalli, jodi village.	Magadi Appavadhani and 30 others.	Situated in the Bedarhalli Sammat. Bounded on the north by Yelagalavadi, on the south by Dasanapura, on the east by Yelagalavadi, on the west by Yelachavadi and Yedahalli.	A. 361 C. 32.	Rs. 282—0—0.	„ 127—0—0.	Dhatu .. Pramadi ...	72 3	0 13	10 0
								75	13	10
	Halagere, jodi village.	Chikka Rama Shastri and 26 others	Situated in the Amrutur Sammat. Bounded on the north by Hundalagere, on the south by Vaddarhalli, on the east by Honnamachanahalli and Doddaguni, on the west by Jinnagere, Settipura and Hundalagere.	A. 1,170 C. 49.	Rs. 784—15—6.	„ 491—12—0.	Dhatu ... Iswara ... Bahudhanya. Pramadi ...	20 47 48 23	9 10 13 0	4 8 8 0
								140	1	8
	Hundalagere, jodi village.	Narayanabhatta of Nagamangala and 5 others.	Situated in the Amrutur Sammat. Bounded on the north by Hosapalya and Bandihalli, on the south by Balekatte and Settipura, on the east by Korati and Balekatte, on the west by Bellagere and Hosapalya.	A. 526 C. 85.	Rs. 345—0—0.	Rs. 184—0—0.	Dhatu ... Iswara ... Bahudhanya. Pramadi ...	67 17 0 7	13 5 0 8	0 9 0 4
								92	11	1
	Ungra, jodi village.	Melkote Venkatrangachari and 11 others.	Situated in the Amrutur Sammat. Bounded on the north by Kilara and Kaggalahalli, on the south by river, on the east by Kaggalahalli and Puttarayanahalli, on the west by Yedavani.	A. 719 C. 52.	Rs. 314—0—0	Rs. 173—0—0	Dhatu ... Iswara ... Pramadi ...	65 67 8	4 6 1	2 8 11
								140	12	9
	Kittamangala ½ share, jodi village.	47 otheabhatta and rs.	Situated in the Kunigal Sammat. Bounded on the north by Kallupalya, on the south by Guntuganalli and Gujanalli, on the east by Kundur and Karekallu, on the west by Kittamangalada Amani Tank and Nagadiyat lands.	A. 225 C. 6.	Rs. 160—0—0.	Rs. 46—0—0	Dhatu ... Iswara ... Bahudhanya. Pramadi ...	24 43 1 56	6 6 0 0	5 9 0 0
								124	13	2

Taluk.	Village.	Names of Jodidars.	Descriptions of the Village.	Estimated Extent.	Estimated Gross Rental or Beriz.	Annual Quit-Rent payable to Government.	Arrears of Government Revenue including Local Cesses for which the Village is to be sold. Years.	Amount.		
Kunigal.	Nittur, ¼ share, jodi village.	Shankar Lingaiya and 6 others.	Situated in the Utridurga Sammat.	...	Rs. 220—0—0.	Rs. 72—0—0.	Dhatu ...	16	14	0
							Iswara ...	65	1	5
							Bahudhanya.	4	14	8
							Pramadi ...	15	3	9
								102	1	10
	Kempasagara, jodi village.	Sura Shastri and 41 others.	Situated in the Kottigere Sammat. Bounded on the north by Settigere, on the south by Nilattanahalli Ane and Kaval, on the east by Sunkigatta, on the west by Settigere.	...	Rs. 882—0—0	Rs. 390—0—0	Dhatu ..	417	9	0
							Iswara ...	417	9	0
							Bahudhanya.	301	5	0
							Pramadi ...	61	9	6
								1,198	0	6
	Nilattanahalli, ¼ share, jodi village.	Venkatrangachari and 21 others.	Situated in the Kottigere Sammat. Bounded on the north by Nilattanahalli Ane and Kaval, on the south by portion of Nilattanahalli village, on the east by Ajjagaudanapalya, on the west by Nilattanahalli Amani tank.	A. 136.	Rs. 152—15—10.	Rs. 62—0—0.	Dhatu ...	85	5	4
							Iswara ..	112	0	10
							Bahudhanya	66	12	6
							Pramadi ...	64	7	4
								328	10	0
	Krishnasagara, jodi village.	Dasambhatta and 28 others.	Situated in the Kunigal Sammat.	...	Rs. 500—0—0	Rs. 328—0—0	Dhatu ...	8	14	7
							Iswara ...	19	5	4
							Bahudhanya.	19	5	4
							Pramadi ...	20	7	6
								68	0	9
	Mangla, jodi village.	Melkote Anantachari.	Situated in the Yediyur Sammat. Bounded on the north by sunnada mara, on the south by Tiptur, on the east by Tubinakere, on the west by Markanahalli and Kodvatti.	A. 1,283.	Rs. 936—15—5.	Rs. 255—0—0	Dhatu ...	284	4	6
							Iswara ...	81	2	6
							Bahudhanya.	284	4	6
							Pramadi ...	198	9	0
								848	4	6
	Singonahalli and 2 Mudligripalyas connected to do jodi village.	Nagasandra Devarbhatta and 19 others.	Situated in the Yediyur Sammat. Bounded on the north by Balakere, on the south by Singonahalli, on the east by Avargere, on the west by Nadamavinapur Anehanta.	A. 446, C. 26.	Rs. 386—9—5.	Rs. 109—0—0.	Dhatu ..	110	1	4
							Iswara ...	121	1	4
							Bahudhanya.	21	6	4
							Pramadi ...	24	2	7
								276	11	7

Taluk.	Village.	Names of Jodidars.	Descriptions of the Village.	Estimated Extent.	Estimated Gross Rental or Beriz.	Annual Quit-Rent payable to Government.	Arrears of Government Revenue including Local Cesses for which the Village is to be sold. Years.	Amount.		
Kunigal.	Hedegere, jodi village.	Surappa and 3 others.	Situated in the Yediyur Sammat. Bounded on the north by Arekere, on the south by Kotekere, on the east by Gunagere, on the west by Bidagere.	A. 358, C. 21.	250—0—0.	184—0—0.	Dhatu ... Iswara ... Bahudhanya.	191 191 90	13 13 10	0 0 6
								474	4	6
	Hudugalavadi and Ujini Channanadoddi connected to do jodi village.	Koppada Venkatappa and 13 others.	Situated in the Koppa Sammat. Bounded on the north by Koppa, on the south by Devastan Hosahalli, on the east by Chikkonahalli, on the west by Gulur Koppa.	A. 629, C. 49.	400—0—0.	310—0—0.	Dhatu ... Iswara ... Bahudhanya. Pramadi ...	130 322 172 145	8 8 8 0	7 0 0 0
								770	8	7
Maddagiri.	Kumsanalli, jodi village.	Venkatrambhatta, Suraiyabhatta and 36 others.	Situated in the Kodigenalli Sammat. Bounded on the north by Dodda Malur and Jogenalli, on the south by Kurudi and Hunusavadi, on the east by Dodda Malur and Bisalahalli, on the west by Kondavadi and Chikka Malur.	A. 2,882, C. 32.	1,672—2—9.	301—0—0.	Dhatu ... Iswara ... Bahudhanya. Pramadi ...	211 403 403 435	13 13 13 13	6 6 6 0
								1,455	5	6
	Bhairapura, jodi village.	1. Maddagiri Kondibhatta. 2. Venkatrambhatta. 3. Narasamma.	Situated in the Kodiginalli Sammat. Bounded on the north by Kalityapura, on the south by Malur and Dasarhalli, on the east by Kalityapura, on the west by Kodigenalli.	A. 211, C. 68.	50—0—0.	19—0—0.	Dhatu ... Iswara ... Bahudhanya. Pramadi ...	22 22 22 22	2 2 2 2	0 0 0 0
								88	8	0
	Adavi Naganahalli, jodi village.	Annaiyachar and 9 others.	Situated in the Kodigenalli Sammat. Bounded on the north by Suddekunte, on the south by Maitanahalli, on the east by Singanahalli, on the west by Tippapura.	A. 1,773, C. 58.	300—0—0	63—0—0	Dhatu .. Iswara ... Bahudhanya. Pramadi ...	... 40 31 5	... 11 12 6	... 6 0 0
								77	13	6
	Varadanahalli, kayamgutta village.	Naranabhatta and others.	Situated in the Kodigenalli Sammat. Bounded on the north by Dodda Dalivatta, on the south by Suddekunte, on the east by Chikka Dalivatta, on the west by Suddekunte.	A. 280	...	19—2—0	Dhatu ... Iswara ... Bahudhanya. Pramadi ...	2 12 7 0	0 14 6 1	 8 2 8
								22	7	2

Taluk.	Village.	Names of Jodidars.	Descriptions of the Village.	Estimated Extent.	Estimated Gross Rental or Beriz.	Annual Quit-Rent payable to Government.	Arrears of Government Revenue including Local Cesses for which the Village is to be sold. Years.	Amount.		
Maddagiri.	Mallenalli, jodi village.	Maddagiri Ramaseshabhatta and 9 others.	Situated in the Maddagiri Sammat. Bounded on the north by Samboganalli, Mutyanapalya, on the south by Sogutihalli, on the east by Sambonalli and Gondihalli, on the west by Poligatahalli and Bijavara.	A. 451, C. 26.	470—0—0.	339—0—0.	Dhatu ... Iswara ... Bahudhanya. Pramadi ...	179 264 379 382	7 10 15 12	1 11 3 6
								1,206	13	9
	Viramanahalli, kayamgutta village.	1. Subba Pandita 2. Shama do 3. Venkatnarsappa.	Situated in the Maddagiri Sammat. Bounded on the north by Uddenalli, on the south by Janakalagutte, on the east by Settihallihalla, on the west by Namatagundu.	A. 50.	21—0—3	21—0—3	Dhatu ... Iswara ... Bahudhanya Pramadi ...	6 21 1 21	4 0 0 0	3 3 3 3
								49	5	0
	Sivanagere, jodi village.	1. Ramanna 2. Venkatramachari 3. Annibhatta and 24 others.	Situated in the Rantavalalu Sammat. Bounded on the north by Hosahalli, on the south by Pittenalli, on the east by Gute village, on the west by Puttasandra of Sira Taluk.	A. 2,095, C. 14.	1,135—0—0.	346—0—0.	Dhatu ... Iswara ... Bahudhanya. Pramadi ...	289 365 281 183	2 5 8 3	8 0 6 9
								1,119	3	11
	Gumpalahalli, jodi village.	Ramabhatta and 5 others.	Situated in the Midagesi Sammat. Bounded on the north by Tippagondanahalli, on the south by Guddata Timmanahalli jodi village, on the east by Bora Chikkanahalli, on the west by Arenalli.	A. 495, C. 30.	150—0—0.	54—0—0	Dhatu .. Iswara ... Bahudhanya. Pramadi ...	16 63 63 64	8 6 6 3	0 0 0 0
								207	7	0
	Hanumantapura, kayamgutta village.	Venkannaiya and others.	Situated in the Puravara Sammat. Bounded on the north by Andralu, on the south by Bada Chaudanahalli, on the east by Kondavadi, on the west by river.	...	106—7—9	106—7—9	Dhatu ... Iswara .. Bahudhanya. Pramadi ...	25 54 57 3	13 3 13 10	6 3 5 3
								141	8	5
Koratagere.	Kalavahalli, jodi village.	Gundabhatta and Bhaskara Rao.	Situated in the Kolal Sammat. Bounded on the north by Gedamanahalli, on the south by Karkalhalli, on the east by Sunkadahalli, on the west by Bavatanahalli.	A. 236, C. 18.	149—0—0.	82—4—0.		283	12	0

Taluk.	Village.	Names of Jodidars.	Descriptions of the Village.	Estimated Extent.	Estimated Gross Rental or Beriz.	Quit-Rent payable to Government.	Arrears of Government Revenue including Local Cesses for which the Village is to be sold. Years.	Amount.		
Chikmayakanhalli.	Kondajji, jodi village.	Krishna Shastri, Venkatesa Shastri and 72 others.	Situated in the Dandinasivara Sammat. Bounded on the north by tank, on the south by limit of Kadaba Taluk, on the east by Dombarahalli and Banterhalli villages, on the west by limit of Kadaba Taluk.	A. 2,737, C. 39.	2,632—12—0.	1,093—0—0	Dhatu ...	951	8	0
							Iswara ...	76	2	0
							Bahudhanya.	598	2	0
							Pramadi ...	1,125	12	0
								2,751	8	0
	Hulisandra, jodi village.	Subramanya Dikshita and 49 others.	Situated in the Dabbegatta Sammat. Bounded on the north by Horikaval, on the south by Dunda village, on the east by Bommanakere, on the west by Hosahalli.	A. 798, C. 50.	617—7—3.	370—4—0.	Dhatu ...	389	8	9
							Iswara ...	379	8	9
							Bahudhanya.	134	8	5
							Pramadi ...	154	7	4
								1,058	1	3
Tumkur.	Mullukunte, jodi village.	Lakshmi Narasimmaiyabhatta and 48 others.	Situated in the Honnudike Sammat. Bounded on the north by Virupasandra and Viranayakanhalli villages, on the south and west by Chikkapura and Honasagere villages, on the east by Honnudike and Anapanahalli villages.	A. 776, C. 39.	1,040—5—0.	308—0—0.	Dhatu ...	141	1	5
							Iswara ...	247	15	4
							Bahudhanya.	354	9	9
							Pramadi ...	297	1	7
								1,040	12	1
	Puttasandra, jodi village.	1. Devarayadurga Narasimhaswami. 2. Sivaram Shastri. 3. Bhairavabhatta and 56 others.	Situated in the Urdigere Sammat. Bounded on the north by Virapura and Lingapura, on the south by Bhairasandra and Tigalarahalli, on the east by Menasandra and Singalipura of Koratagere Taluk, on the west by Dundanahalli and Marachanahalli.	A. 1,075, C. 38.	1,201—9—7.	582—0—0	Dhatu ...	395	0	0
							Iswara ...	423	12	0
							Bahudhanya.	192	4	11
							Pramadi ...	398	0	0
								1,409	0	11

The 23rd September 1880.

No. 56—It is hereby notified for public information that all the rights of the present jodidars in the undermentioned jodi village in the Hoskote Taluk of the Bangalore District, which has been duly attached in satisfaction of the arrears of revenue due to Government (as shewn in the subjoined statement) by the said jodidars, will be sold by public auction at the village before the Amildar on the 26th October 1880. The sale will commence at 11 A. M. on that date and the village will be knocked down to the highest bidder without reserve.

2. Purchasers will be required to deposit 25 per cent of the purchase money at the time of sale, and where the remainder of the purchase money may not be paid within 15 days from the day of sale, the money so deposited shall be liable to forfeiture.

3. When such deposit shall not be made, nor the remaining purchase money paid up, the lands shall be re-sold at the expense and risk of the first purchaser.

4. Persons bidding at the sale may be required to state whether they bid on their own account or as agents, and in the latter case, to deposit a written authority signed by their principals, otherwise their bids may be rejected.

5. The sale shall be stayed, if the defaulter, or any other person acting on his behalf or claiming an interest in the land, tenders the full amount of arrears of revenue with the interest and other charges, provided such tender be made before sunset on the day previous to that appointed for the sale.

6. The sale of the property will not become absolute until the sale has been confirmed by the Chief Commissioner.

7. Purchasers having completed the payment of the purchase money will, as soon as the sale has been confirmed by the Chief Commissioner, will be placed in immediate possession, and the village will be registered in the name of the purchaser, and a certificate of sale signed and sealed by the Deputy Commissioner will be granted to him. It is to be distinctly understood that the Government are not responsible for errors of description and in estimated extent.

8. Provided parties deeming themselves aggrieved by the sale shall be at liberty to appeal to the Chief Commissioner within 30 days from the day of sale, and the purchase shall be conditional on the final order in such appeal.

Hobli.	Village.	Names of Jodidars.	Boundaries of the Village.	Estimated Extent.			Estimated Deriz.			Quit-Rent payable annually to Government.			Arrears of Government Revenue for which Village is to be sold.			
													Years.	Amount		
				K.	K.	P.	R.	A.	P.	R.	A.	P.				
Mugalur.	Bagur.	Vasudevachar and Shamachar.	Bounded on the north by Ganagalur, on the south by Gundur, on the east by Marangere, on the west by jodi Tiruvaranga village.	37	15	10¼	193	5	9	193	5	4	Dhatu ...	93	5	9
													Isvara ...	93	5	9
													Bahudhanya.	93	5	9
													Pramadi ..	193	5	4
													Total.....	473	6	7

N. B.—The sale includes the tamarind, mango, honge, and ippe trees in the village.

By Order,

C. RANGACHARLU,
Revenue Secretary.

Notifications, &c., by the Government of India.

LEGISLATIVE DEPARTMENT.

NOTIFICATION.

Simla, the 24th September 1880.

No. 15.—Whereas the Secretary of State for India has by Resolution in Council declared the provisions of the Statute 33 Vic., cap. 3, section 1, to be from and after the 1st October 1877 applicable to the territories forming the Chief Commissionership of Coorg;

And whereas the Chief Commissioner of Coorg has proposed to the Governor General in Council a draft of the following Regulation, together with the reasons for proposing the same;

And whereas the Governor General in Council has taken such draft and reasons into consideration, and has approved of such draft, and the same has received the Governor General's assent;

In pursuance of the direction contained in the said section, the said Regulation is now published in the *Gazette of India.*

REGULATION No. III OF 1880.

A Regulation to declare and amend the law relating to the collection of the Public Revenue in the Province of Coorg.

Preamble.

WHEREAS it is expedient to declare and amend the law relating to the collection of the public revenue in the Province of Coorg; It is hereby enacted as follows:—

Interpretation-clause. "Landholder."

1. The term "Landholder," as used in this Regulation, shall mean and include all holders of land under jamma, sagu or otherwise subject to the payment of revenue direct to Government.

"Public revenue."

"Public Revenue" due on land shall, for the purposes of this Regulation, be taken to include cesses or other dues payable to Government on account of water supplied for irrigation.

"Chief Commissioner" and "Superintendent."

"Chief Commissioner" and "Superintendent," as used in this Regulation, mean the Chief Commissioner of Coorg and the Superintendent of Coorg respectively.

Land, the security for the revenue.

2. The land, the buildings upon it and its products shall be regarded as the security for the public revenue.

Landholder when and to whom to pay his khist.

3. Every landholder shall pay to the Superintendent, or other officer empowered by him to receive it, the revenue due upon his land on or before the day on which it falls due, according to the khistbandi or other engagement; and where no particular day is fixed, then within the time when the payment falls due according to local usage; Provided that, it shall be lawful for the Chief Commissioner, by notification published in the official Gazette, to alter and fix from time to time the amount of the several khists or instalments, and the dates at which they shall respectively become payable.

The whole or portion of a khist remaining unpaid shall be deemed to be an arrear of revenue.

4. When the whole or a portion of a khist is not so paid, the amount of the khist or of its unpaid portion shall be deemed to be an arrear of revenue.

Arrear of revenue how to be recovered.

5. Whenever revenue is in arrear, it shall be lawful for the Superintendent, or other officer empowered by the Superintendent in that behalf, to proceed to recover the arrear, together with interest and costs of process, by the sale of the defaulter's movable and immovable property, in manner hereinafter provided.

106

Chief Commissioner empowered to appoint officer to sell distrained property.

6. The Chief Commissioner may, from time to time, appoint such officer or officers as may be necessary to sell, subject to all the rules and provisions contained in this Regulation, property distrained for arrears of revenue. Such officer or officers shall be subject also to the control and superintendence of the Superintendent.

Arrears of revenue to bear interest.

7. Arrears of revenue shall bear interest at the rate of six per cent per annum; but the Superintendent may remit, for sufficient cause shewn, the interest due on the arrear or any part of it.

Rules for seizure and sale of movable property.

8. In the seizure and sale of movable property for arrears of revenue, the following rules shall be observed :—

Demand in writing.

First.—The Superintendent, or other officer empowered by the Superintendent in that behalf, shall furnish to the person employed to distrain the property of a defaulter a demand in writing, and signed with his name, specifying the name of the defaulter, the amount of the arrear for which the distress may be issued, and the date on which the arrear fell due. The person employed to distrain shall produce the writing which, if the arrear, together with the batta due to him under section forty-eight, be not at once paid, shall be his authority for making the distress; and on the day on which the property may be distrained, shall deliver a copy of such writing to the defaulter, endorsing thereon a list or inventory of the property distrained and the name of the place where it may be lodged or kept.

Defaulter to be served with a copy.

Writing to state that the distrained property will be sold.

Second.—The writing shall further set forth that the distrained property will be immediately brought to public sale, unless the amount, with interest, batta and all the expenses of the distress, be previously discharged.

Mode of service when defaulter is absent.

Third.—When a defaulter is absent, a copy of the writing, with the endorsement, shall be fixed or left at his usual place of residence, or on the premises where the property may have been distrained, before the expiration of the third day calculating from the day of the distress.

Consequence of defaulter neglecting to pay after notice.

9. When the amount due has not been paid pursuant to the terms of the demand, and no arrangement for securing the same has been entered into to the satisfaction of the Superintendent, or other officer empowered by the Superintendent in that behalf, the distrainer shall transmit an inventory of the property distrained to the nearest public officer empowered by the Chief Commissioner, under section six, to sell distrained property, in order that it may be publicly sold for the discharge of the arrear due, with terest, batta and cost of distraint.

On tender of arrear and expenses prior to day of sale, distress to be withdrawn.

10. Where a defaulter tenders payment of the arrear demanded after his property has been distrained, and prior to the day fixed for sale, together with payment of interest, batta and all necessary expenses attending distress, the distrainer shall receive the amount immediately upon the same being tendered, and shall forthwith release the property.

Distrained crops how to be dealt with.

11. The distrainer attaching the crops or ungathered products of the land belonging to a defaulter may cause them to be sold when fit for reaping or gathering, or at his option may cause them to be reaped or gathered in due season, and stored in proper places until sold. In the latter case, the expense of reaping or gathering and storing such crops or products shall be defrayed by the owner upon his redeeming the property, or from the proceeds of the sale in the event of its being sold.

Tenant may pay arrears and terminate attachment.

When crops or products belonging to a tenant have been sold, it shall be lawful for such tenant to deduct the value of the crops or products so sold from any rent which may be due by him, then or afterwards, to the defaulter, in respect of the land on which such crops or products have been grown. It shall also be lawful for a tenant whose crops are attached for an arrear of revenue to pay the arrear and deduct the amount in the aforesaid manner from any rent due by him, then or afterwards.

Distrained cattle or goods not to be used.

12. The distrainer shall not work the bullocks or cattle, or make use of the goods or effects distrained; he shall provide the necessary food for the cattle or live-stock, the expense attending which shall be defrayed by the owner upon his redeeming the property or from the proceeds of the sale in the event of its being sold.

Officer responsible on neglect in respect of distrained property.

13. Where property distrained is stolen or lost or damaged by reason of the necessary precautions for its due preservation not having been taken, or from its having been improperly worked or made use of, the amount of such loss or damage shall be recoverable by summary process by the Superintendent from the officer whose neglect or act occasioned the loss or damage, and the amount when recovered, shall be paid to the person damnified.

Distress to be proportionate to the arrear.

14. The distress levied shall not be excessive, that is to say, the property distrained shall be as nearly as possible proportionate to the amount of the arrears; and such cattle and agricultural implements as may be required by the defaulter for the purpose of cultivation shall be exempt from attachment.

Time of distress.

15. Distress shall be made after sunrise and before sunset, and not otherwise.

Penalty for fraudulent conveyance of property to prevent distress.

16. Where a defaulter makes a fraudulent conveyance of property to prevent the distress for arrears, any Civil Court of competent jurisdiction, upon proof thereof, shall summarily cause the property to be delivered up to the distrainer. The defaulter shall further be liable to the penalties prescribed by section 424 of the Indian Penal Code.

Claims to property distrained and sold.

17. Where any person, not being a defaulter or responsible for a defaulter, claims a right to the property distrained, and the distrainer may notwithstanding cause the same to be sold, such claimant, on proof of such right in any Civil Court of competent jurisdiction, and in the event of the distrainer being unable to prove the responsibility for the arrear of revenue on account of which the property may have been sold, shall recover from the distrainer the full value of such property, with interest, costs and damages, according to the circumstances of the case. But claims to crops upon the ground, or to gathered products of the ground, attached in the possession of the defaulter, whether founded upon a previous sale, mortgage or otherwise, shall not bar the prior claim of revenue due from the ground upon which such crop or product may have been grown.

Revenue to be the first charge.

Penalty for forcibly or clandestinely taking away distrained property.

18. Where it is proved to the satisfaction of any Civil Court of competent jurisdiction that any person has forcibly or clandestinely taken away property once distrained, the Court may summarily cause such property to be restored to the distrainer. The offender shall further be liable to the penalties prescribed by the Indian Penal Code.

What places distrainer may force open.

19. It shall be lawful for the distrainer to force open any stable, cow-house, granary, godown, out-house or other building, and he may also enter any dwelling house, the outer door of which may be open, and may break open the door of any room in such dwelling-house, for the purpose of attaching property belonging to a defaulter and lodged therein: Provided always that it shall not be lawful for such distrainer to break open or enter any apartment in such dwelling-house appropriated for the zanana or residence of women, except as hereinafter provided.

Powers of distrainer to force open doors in the presence of a Police officer.

20. Where a distrainer has reason to suppose that the property of a defaulter is lodged within a dwelling-house the outer door of which is shut, or within any apartments appropriated to women which by the usage of the country, are considered private, such distrainer shall represent the same to the officer in charge of the nearest Police-station. On such representation, the officer in charge of the said station shall send a Police officer to the spot, in presence of whom the distrainer may force open the outer door of such dwelling-house, in like manner as he may break open the door of any room within the house except the zanana. The distrainer may also, in the presence of the Police officer, after due notice given for the removal of women within a zanana, and after furnishing means for their removal in a suitable manner (if they be women of rank who according to the customs of the country cannot appear in public), enter the zanana-apartments for the purpose of distraining the defaulter's property deposited therein; but such property, if found, shall be immediately removed from such apartments, after which they shall be left free to the former occupants.

Punishment for unlawful entry.

21. Persons entering the apartments of women or forcing open the outer door of dwelling-houses contrary to the provisions of this Regulation shall, on conviction before a Magistrate, be liable to a fine not exceeding five hundred rupees, or to imprisonment of either description for a term which may extend to six months.

108

22. The public officer empowered by the Chief Commissioner, under section six, to sell distrained property, shall cause to be affixed to the outer door of the defaulter's house, or on the premises where the property may have been distrained, a list of the property to be sold, with a notice specifying the place where, and the day and hour at which, the distrained property will be sold, and shall cause proclamation of the intended sale to be made by affixing a copy in the village ambála or meeting-place, or by beat of drum, or by other customary mode in the village to which the lands on which the arrear has accrued may belong, and in such place or places as the Superintendent, or other officer empowered by the Superintendent in that behalf, may consider necessary to give due publicity to the sale.

Proclamation to be made of the time of sale, and of the property to be sold.

No sale shall take place until after the expiration of a period of fifteen days from the date on which the notice may be published as above stated.

23. At the appointed time, the property shall be put up in one or more lots as the said officer may consider advisable, and shall be disposed of to the highest bidder. Where the property is sold for more than the amount of the arrear, the overplus, after deducting expenses of process and interest, shall be paid to the defaulter.

Sale how to be conducted.

24. The property shall be paid for in ready money at the time of sale, or as soon after as the officer holding the sale shall appoint; and the purchaser shall not be permitted to carry away any part of the property until he has paid for the same in full.

Payment on the purchase of distrained property how to be made.

Where the purchaser fails in the payment of the purchase-money, the property shall be re-sold, and the defaulting purchaser shall be liable for any loss arising, as well as the expenses incurred, on the re-sale. Where the property on the second sale is sold for a higher price than at the first sale, the difference or increase shall be the property of him on whose account the said first sale was made.

Re-sale in case of default.

25. Before the Superintendent, or other officer empowered by the Superintendent in that behalf, proceeds to attach the land of the defaulter, or buildings thereon, he shall cause a written demand to be served upon the defaulter specifying the amount due, the estate or land in respect of which it is claimed, the name of the party in arrear, the batta due to the person who shall serve the demand, and the time allowed for payment, which shall be fixed with reference to the distance from the land on which the arrear is due to the place at which the money is to be paid.

Demand to be served prior to attachment of land.

Such demand shall be served by delivering a copy to the defaulter, or to some adult male member of his family at his usual place of abode, or to his authorized agent, or by affixing a copy thereof on some conspicuous part of his last known residence, or on some conspicuous part of the land about to be attached.

Mode of service.

26. When the amount due has not been paid pursuant to the terms of the demand, and no arrangement for securing the same has been entered into to the satisfaction of the Superintendent, or other officer empowered by the Superintendent in that behalf, he shall proceed to recover the arrear by the attachment and sale of the defaulter's land in the following manner.

Consequence of defaulter neglecting to pay.

27. The attachment shall be effected by affixing a notice thereof to some conspicuous part of the land. The notice shall set forth that unless the arrear, with interest and expenses, be paid within the date therein mentioned, the land will be brought to sale in due course of law. The attachment shall be notified by public proclamation on the land and by publication of the notice in the official Gazette.

Mode of attachment.

28. It shall be lawful for the Superintendent, when attaching the land of a defaulter, or at any time during such attachment, to assume the management of the property attached. In such case he shall appoint an agent with a proper establishment of officers to manage the property, and shall give the agent a certificate of appointment with written instructions under his seal and signature, and the expenses of management shall be defrayed out of the income of the property: Provided always that where the property may be too inconsiderable to admit of its being charged with the salary of an agent, it shall be committed to the care of such Revenue-officer as the Superintendent may select, who shall be subject to all the provisions hereinafter contained in reference to agents.

Appointment of agents.

In certain cases Revenue-officer to take charge.

29. Notice of the assumption of management shall forthwith be served on the defaulter in the manner described in section twenty-five, and shall be notified by public proclamation on the land and by publication in the official Gazette.

Notice of assumption of management.

30. It shall be the duty of the agent, during the continuance of management under section twenty-eight, to collect the rents and profits due, or accruing due, upon the estate, according to the engagements subsisting between the defaulter and the parties holding under him, or according to established usage where no specific engagements exist.

Duties of agent.

The agent shall keep accounts of all his receipts and disbursements, and submit the same and pay over the balance to the Superintendent, or other officer empowered by the Superintendent in that behalf, monthly, or whenever required; and the defaulter shall be at liberty to inspect the accounts at all reasonable times, and to take copies of the same at his own expense without fee.

31. It shall be lawful for the defaulter to proceed by prosecution or suit against the agent in respect of any criminal or illegal act done by him to the injury of the defaulter or his estate; and all tenants or other persons holding by subordinate title shall have the same remedies against him as they would have had against the defaulter if the act were done by the defaulter.

Liability of agent to suit or prosecution.

32. All engagements entered into between the landholder and his tenants, except such as are hereinafter mentioned, shall be binding upon the Superintendent during attachment; but all such engagements made collusively with a view to defeat or delay the effect of the attachment, and all leases of land at a rate lower than the usual rates of assessment, and not made *boná fide* for the purpose of erecting factories or buildings, or of bringing waste-land into cultivation, and all engagements made subsequently to attachment, shall be nul and void against the Superintendent if he shall so declare; subject, however, to the right of the parties to such agreement to bring a suit against the Superintendent in the ordinary tribunals to establish the same; and all charges or incumbrances upon such land shall be postponed to the payment of the public revenue.

Effect of existing agreements between landholder and tenants.

33. All payments on account of rent or profits actually due made before public notice of assumption of management, to or on behalf of any landholder by any person holding under him, shall be valid against the Superintendent; and all such payments made after public notice of such assumption, or made before they were actually due, shall be nul and void against the Superintendent, who shall be entitled to recover as arrears of rent the full amount from the parties by whom it was paid, leaving them to sue the defaulter in the ordinary courts of law.

Payments by tenants.

34. All sums received from the property attached, after paying the expenses of attachment and management, shall be carried to the credit of the defaulter in discharge of the arrears due, and interest thereon at the rate of six per cent, per annum; and as soon as all arrears, interest, costs of attachment and expense of management have been liquidated, the attachment shall be withdrawn, and a full account rendered of all receipts and disbursements during its continuance.

Mode of settlement on withdrawal of attachment.

35. Any person claiming an interest in land which has been or is about to be attached may obtain its release by paying the arrears, interest and costs incurred; and all such sums, if paid by a tenant, may be deducted from any rent then or afterwards due by him to the defaulter; and if paid by a *boná fide* mortgagee or other incumbrancer upon the estate, shall constitute a debt from the defaulter to him, and shall be a charge upon the land, but shall only take priority over other charges according to the date at which the payment was made.

Persons interested in land may release it from attachment.

36. In the sale of immovable property under this Regulation, the following rules shall be observed:—

Rules to be observed in sale of immovable property.

First.—The sale shall be by public auction to the highest bidder. The time and place of sale shall be fixed by the Superintendent, or other officer empowered by the Superintendent in that behalf. The time may be either previous to or after the expiration of the official year.

Public auction.

Second.—Previous to the sale, the Superintendent, or other officer empowered by the Superintendent in that behalf, shall issue a notice thereof in English and in Kanarese specifying the name of the defaulter, the position and extent of land and of the buildings thereon, the amount of revenue assessed on the land or upon its different sections, the proportion of the public revenue due during the remainder of the current official year, and the time, place and conditions of sale. This notice shall be fixed up one month at least before the sale in the Superintendent's Office and in the taluk cutcherry, in the nád cutcherry and on some conspicuous part of the land.

Notification one month before sale.

Third.—A sum of money equal to fifteen per cent of the price of the lands shall be deposited by the purchaser in the hands of the Superintendent, or other officer empowered by the Superintendent in that behalf, at the time of the purchase; and where the remainder of the purchase-money may not be paid within thirty days, the money so deposited shall be liable to forfeiture.

Deposit and payment of balance.

Fourth.—Where the purchaser refuses or omits to deposit the said sum of money, or to complete the payment of the remaining purchase-money, the property shall be re-sold at the expense and hazard of such purchaser, and the amount of all loss or expense which may attend such refusal or omission shall be recoverable from such purchaser in the same manner as arrears of public revenue. Where the lands on the second sale are sold for a higher price than at the first sale, the difference or increase shall be the property of him on whose account the said first sale was made.

Re-sale in default of payment.

Fifth.—All persons bidding at a sale may be required to state whether they are bidding on their own behalf or as agents, and in the latter case to deposit a written authority signed by their principals. If such requisition be not complied with, their bids may be rejected.

Agents to name their principals.

37. The defaulter, or any person acting on his behalf or claiming an interest in the land, may tender to the officer appointed to conduct the sale the full amount of the arrears of revenue with the interest thereon, and all charges which have been incurred in demanding the arrears, or in attaching or managing the estate or in taking the steps necessary for sale, and thereupon the sale shall be stayed: Provided that such tender must be made before sunset on the day previous to that appointed for the sale, and all sums so paid by any tenant, or *bonâ fide* mortgagee, or other incumbrancer, shall be deemed payments under section thirty-five.

Tender of arrears up to sunset on day previous to sale.

38. Lands purchased at a public sale shall be registered in the name of the actual purchaser, who shall receive a certificate of sale signed and sealed by the Superintendent, which shall be conclusive evidence of the fact of the purchase, and no proof of the Superintendent's seal or signature shall be necessary, unless the authority before whom it is produced has reason to doubt its genuineness.

Purchaser to be registered.

Effect of certificate.

39. When lands are purchased at public sale, the Superintendent, or other officer empowered by the Superintendent in that behalf, shall publish in the villages in which the land sold may be situated, in the cutcherry of the taluk and nád, in the head cutcherry of the district, and in the official Gazette, the name of the purchaser and the date of purchase, together with a declaration of the lawful transfer to such purchaser of all the rights and property of the former landholder in the said lands.

Proclamation of sale.

40. Where, notwithstanding such publication, any lawful purchaser of land is resisted and prevented from obtaining possession of his purchased land, any Court of competent jurisdiction, on application and production of certificate of sale provided for by section thirty-eight, shall cause the proper process to be issued for the purpose of putting such purchaser in possession in the same manner as if the purchased lands had been decreed to the purchaser by a decision of the Court.

Delivery of possession.

41. All contracts entered into by the defaulter with his tenants, and all payments to him by them, shall be binding upon the purchaser to the same extent and under the same conditions as laid down in sections thirty-two and thirty-three of this Regulation.

Contracts with and payments to defaulter how far binding on purchaser.

Receipts of payment of revenue.

51. Every person making a payment of revenue shall be entitled to a receipt for the same, signed by the Superintendent, or other officer empowered by the Superintendent in that behalf;

Such receipt shall state the name of the person making the payment and the subject-matter in respect of which it is paid, and, in case of land-revenue, shall describe the land on which the assessment is due, and the names of the persons entered in respect thereof in the settlement account.

Civil Court not to take cognizance of questions relating to rate of revenue.

52. No Court of civil judicature shall take into consideration or decide any question as to rate of land revenue payable to Government, or as to the amount of assessment fixed or to be hereafter fixed by the Government.

Suits by persons aggrieved by proceedings under this Regulation.

53. Nothing contained in this Regulation shall be held to prevent parties deeming themselves aggrieved by any proceedings under this Regulation, except as hereinbefore provided, from applying to the Civil Courts for redress: Provided that Civil Courts shall not take cognizance of any suit other than a suit for compensation instituted by such parties for any such cause of action, unless such suit shall be instituted within six months from the time at which the cause of action arose.

Limitation of suits.

Suits against Superintendent to survive against his successor,

54. No suit brought against the officer holding at any time the office of Superintendent of Coorg by any person deeming himself aggrieved by anything done or purporting to be done under this Regulation shall abate by reason of the departure from his district of the officer against whom such suit shall have been brought; but the suit may be continued against the successor of such Superintendent in all respects as though it had been instituted against himself. A suit may be brought against any Superintendent in his official capacity on account of anything done or purporting to have been done under this Regulation by his predecessor subject to the limitation prescribed in the preceding section: Provided that no Superintendent shall be personally liable for any official act of his predecessor.

or to be originally maintainable against him.

No personal liability for acts of predecessor.

55. This Regulation shall take effect from the date of its publication in the official Gazette.

D. FITZPATRICK,
Secretary to the Govt. of India.

THE

MYSORE GAZETTE.

No. 41 Published by Authority. of 1880.

BANGALORE, SATURDAY, OCTOBER 16, 1880.

☞ Separate paging is given to this Part in order that it may be filed as a separate compilation.

CONTENTS.

	PAGE.
PART I.—Notifications by the Chief Commissioner of Mysore and Coorg.—Notifications by the Government of India...	297—306
PART II.—Notifications, &c., by the Judicial Commissioner; Survey and Settlement Commissioner; Superintendent of Inam Settlements; Deputy Accountant General; Public Works Officers; Military Assistant; Inspector General of Registration; Director of Public Instruction; Deputy Surgeon General of Hospitals; Anche Bakshi; President of the Bangalore Municipal Boards; District and Sessions Judges; Deputy Commissioners of Districts.—Season Reports; Meteorological Registers; Postal Notices, &c.	513—522
PART III.—Acts and Bills of the Governor Genl. of India in Council, &c.	Nil.
PART IV.—Miscellaneous Papers	Nil.
SUPPLEMENT.—Abstract of Season or Intermediate Reports, &c.	

PART I.

Notifications by the Chief Commissioner of Mysore.

GENERAL DEPARTMENT.

NOTIFICATIONS.

The 13th October 1880.

No. 111.—Mr. E. Chitambram Iyer delivered over, and Mr. K. Seshadri Iyer, B. A. and B. L., received, charge of the Túmkúr District and Treasury, on the forenoon of the 9th October 1880.

The 14th October 1880.

No. 112.—Mr. J. P. Garrett, Superintendent, Mysore Government Press, and Compiler, Mysore Gazette, retired from the service on the 14th October 1880.

By Order,

W. J. CUNINGHAM,
Secretary.

REVENUE DEPARTMENT.

NOTIFICATIONS.

The 7th October 1880.

No. 60.—It is hereby notified for public information that all the rights of the present jodidars in the undermentioned jodi villages which have been duly attached in satisfaction of the arrears of revenue due to Government (as shewn in the subjoined statement) by the said jodidars, will be sold by public auction at the places and on the dates mentioned in the annexed statement. The sale will commence at 11 A. M. on the dates specified and the villages will be knocked down to the highest bidder without reserve.

2. The purchaser will be required to deposit 25 per cent of the purchase money at the time of sale and where the remainder of the purchase money may not be paid within 15 days from the day of sale, the money so deposited shall be liable to forfeiture.

3. When such deposit shall not be made nor the remaining purchase money paid up, the lands shall be re-sold at the expense and risk of the first purchaser.

4. Persons bidding at the sale may be required to state whether they bid on their own account or as agents, and in the latter case to deposit a written authority signed by their principals, otherwise their bids may be rejected.

5. The sale shall be stayed, if the defaulter, or any other person acting on his behalf or claiming an interest in the land, tenders the full amount of the arrears of revenue with the interest and other charges, provided such tender be made before sunset on the day previous to that appointed for the sale.

6. The sale of the property will not become absolute until the sale has been confirmed by the Chief Commissioner.

7. Purchasers having completed the payment of the purchase money will, as soon as the sale has been confirmed by the Chief Commissioner, be placed in immediate possession, and the village will be registered in the name of the purchaser, and a certificate of sale signed and sealed by the Deputy Commissioner will be granted to him. It is to be distinctly understood that the Government are not responsible for errors of description and in estimated extent.

8. Provided parties deeming themselves aggrieved by the sale shall be at liberty to appeal to the Chief Commissioner within 30 days from the day of sale, and the purchase shall be conditional on the final order in such appeal.

District.	Taluk.	Hobli.	Village.	Names of Jodidars.	Boundaries of the Village.	Estimated Extent.	Estimated gross rental or Beriz.	Quit-Rent payable annually to Government.	Arrears of Government Revenue for which the Village is to be sold.				Date of Sale, &c.
									Years.	Amount.			
Kadur.	Chikmagalur.	Marle.	Shettigere.	Nanjundabhat and 44 others.	Bounded on the east by Koratakere boundary, on the south Kyatanahalli, on the west Bennur and on the north Hanike village.	A. 1,028 G. 13.	1,667—12—0.	422—0—0.	1879—80.	523	4	3	10th November 1880, at the Taluk Office before the Amildar.
Do	Do	Malalur.	Badanike.	Nanjundabhat and 35 others.	Bounded on the east by Beranji river, on the west Terugane village limit, on the south Biranji river, on the north Kundur village limit.	A. 569 G. 24.	865—14—8.	286—0—0.	1879—80.	227	3	5	10th November 1880 at the Taluk Office before the Amildar.

115

The 14th October 1880.

No. 61.—The Chief Commissioner has been pleased to sanction the reduction of the License fee on Pottery Kilns levied under the provisions of Section 185, Bangalore Municipal Regulations of 1871, from Rs. 5 to 4 per Kiln per annum.

By Order,

C. RANGACHARLU,
Revenue Secretary.

Notifications by the Chief Commissioner of Coorg.

GENERAL.

NOTIFICATION.

The 9th October 1880.

No. 17.—The Revd. G. Richter, Inspector of Schools, Coorg, handed over, and Mr. E. Marsden, B. A., Principal of the Mercara High School, received, charge of the office of the Inspector of Schools on the forenoon of the 1st instant.

By Order,

W. J. CUNINGHAM,
Secretary.

Notifications, &c., by the Government of India.

LEGISLATIVE DEPARTMENT.

NOTIFICATION.

Simla, the 24th September 1880.

No. 15.—Whereas the Secretary of State for India has by Resolution in Council declared the provisions of the Statute 33 Vic., cap. 3, section 1, to be from and after the 1st October 1877 applicable to the territories forming the Chief Commissionership of Coorg;

And whereas the Chief Commissioner of Coorg has proposed to the Governor General in Council a draft of the following Regulation, together with the reasons for proposing the same;

And whereas the Governor General in Council has taken such draft and reasons into consideration, and has approved of such draft, and the same has received the Governor General's assent;

In pursuance of the direction contained in the said section, the said Regulation is now published in the *Gazette of India.*

REGULATION No. III OF 1880.

A Regulation to declare and amend the law relating to the collection of the Public Revenue in the Province of Coorg.

Preamble.

WHEREAS it is expedient to declare and amend the law relating to the collection of the public revenue in the Province of Coorg; It is hereby enacted as follows:—

Interpretation-clause. "Landholder."

1. The term "Landholder," as used in this Regulation, shall mean and include all holders of land under jamma, sagu or otherwise subject to the payment of revenue direct to Government.

"Public revenue."

"Public Revenue" due on land shall, for the purposes of this Regulation, be taken to include cesses or other dues payable to Government on account of water supplied for irrigation.

"Chief Commissioner" and "Superintendent."

"Chief Commissioner" and "Superintendent," as used in this Regulation, mean the Chief Commissioner of Coorg and the Superintendent of Coorg respectively.

Land, the security for the revenue.

2. The land, the buildings upon it and its products shall be regarded as the security for the public revenue.

Landholder when and to whom to pay his khist.

3. Every landholder shall pay to the Superintendent or other officer empowered by him to receive it, the revenue due upon his land on or before the day on which it falls due, according to the khistbandi or other engagement; and where no particular day is fixed, then within the time when the payment falls due according to local usage; Provided that it shall be lawful for the Chief Commissioner, by notification published in the official Gazette, to alter and fix from time to time the amount of the several khists or instalments, and the dates at which they shall respectively become payable.

The whole or portion of a khist remaining unpaid shall be deemed to be an arrear of revenue.

4. When the whole or a portion of a khist is not so paid, the amount of the khist or of its unpaid portion shall be deemed to be an arrear of revenue.

Arrear of revenue how to be recovered.

5. Whenever revenue is in arrear, it shall be lawful for the Superintendent, or other officer empowered by the Superintendent in that behalf, to proceed to recover the arrear, together with interest and costs of process, by the sale of the defaulter's movable and immovable property, in manner hereinafter provided.

Chief Commissioner empowered to appoint officer to sell distrained property.

6. The Chief Commissioner may, from time to time, appoint such officer or officers as may be necessary to sell, subject to all the rules and provisions contained in this Regulation, property distrained for arrears of revenue. Such officer or officers shall be subject also to the control and superintendence of the Superintendent.

Arrears of revenue to bear interest.

7. Arrears of revenue shall bear interest at the rate of six per cent per annum; but the Superintendent may remit, for sufficient cause shewn, the interest due on the arrear or any part of it.

Rules for seizure and sale of movable property.

8. In the seizure and sale of movable property for arrears of revenue, the following rules shall be observed:—

Demand in writing.

First.—The Superintendent, or other officer empowered by the Superintendent in that behalf, shall furnish to the person employed to distrain the property of a defaulter a demand in writing, and signed with his name, specifying the name of the defaulter, the amount of the arrear for which the distress may be issued, and the date on which the arrear fell due. The person employed to distrain shall produce the writing which, if the arrear, together with the batta due to him under section forty-eight, be not at once paid, shall be his authority for making the distress; and on the day on which the property may be distrained, shall deliver a copy of such writing to the defaulter, endorsing thereon a list or inventory of the property distrained and the name of the place where it may be lodged or kept.

Defaulter to be served with a copy.

Writing to state that the distrained property will be sold.

Second.—The writing shall further set forth that the distrained property will be immediately brought to public sale, unless the amount, with interest, batta and all the expenses of the distress, be previously discharged.

Mode of service when defaulter is absent.

Third.—When a defaulter is absent, a copy of the writing, with the endorsement, shall be fixed or left at his usual place of residence, or on the premises where the property may have been distrained, before the expiration of the third day calculating from the day of the distress.

Consequence of defaulter neglecting to pay after notice.

9. When the amount due has not been paid pursuant to the terms of the demand, and no arrangement for securing the same has been entered into to the satisfaction of the Superintendent, or other officer empowered by the Superintendent in that behalf, the distrainer shall transmit an inventory of the property distrained to the nearest public officer empowered by the Chief Commissioner, under section six, to sell distrained property, in order that it may be publicly sold for the discharge of the arrear due, with interest, batta and cost of distraint.

On tender of arrear and expenses prior to day of sale, distress to be withdrawn.

10. Where a defaulter tenders payment of the arrear demanded after his property has been distrained, and prior to the day fixed for sale, together with payment of interest, batta and all necessary expenses attending distress, the distrainer shall receive the amount immediately upon the same being tendered, and shall forthwith release the property.

117

11. The distrainer attaching the crops or ungathered products of the land belonging to a defaulter may cause them to be sold when fit for reaping or gathering, or at his option may cause them to be reaped or gathered in due season, and stored in proper places until sold. In the latter case, the expense of reaping or gathering and storing such crops or products shall be defrayed by the owner upon his redeeming the property, or from the proceeds of the sale in the event of its being sold.

Distrained crops how to be dealt with.

When crops or products belonging to a tenant have been sold, it shall be lawful for such tenant to deduct the value of the crops or products so sold from any rent which may be due by him, then or afterwards, to the defaulter, in respect of the land on which such crops or products have been grown. It shall also be lawful for a tenant whose crops are attached for an arrear of revenue to pay the arrear and deduct the amount in the aforesaid manner from any rent due by him, then or afterwards.

Tenant may pay arrears and terminate attachment.

12. The distrainer shall not work the bullocks or cattle, or make use of the goods or effects distrained; he shall provide the necessary food for the cattle or live-stock, the expense attending which shall be defrayed by the owner upon his redeeming the property or from the proceeds of the sale in the event of its being sold.

Distrained cattle or goods not to be used.

13. Where property distrained is stolen or lost or damaged by reason of the necessary precautions for its due preservation not having been taken, or from its having been improperly worked or made use of, the amount of such loss or damage shall be recoverable by summary process by the Superintendent from the officer whose neglect or act occasioned the loss or damage, and the amount when recovered, shall be paid to the person damnified.

Officer responsible on neglect in respect of distrained property.

14. The distress levied shall not be excessive, that is to say, the property distrained shall be as nearly as possible proportionate to the amount of the arrears; and such cattle and agricultural implements as may be required by the defaulter for the purpose of cultivation shall be exempt from attachment.

Distress to be proportionate to the arrear.

15. Distress shall be made after sunrise and before sunset, and not otherwise.

Time of distress.

16. Where a defaulter makes a fraudulent conveyance of property to prevent the distress for arrears, any Civil Court of competent jurisdiction, upon proof thereof, shall summarily cause the property to be delivered up to the distrainer. The defaulter shall further be liable to the penalties prescribed by section 424 of the Indian Penal Code.

Penalty for fraudulent conveyance of property to prevent distress.

17. Where any person, not being a defaulter or responsible for a defaulter, claims a right to the property distrained, and the distrainer may notwithstanding cause the same to be sold, such claimant, on proof of such right in any Civil Court of competent jurisdiction, and in the event of the distrainer being unable to prove the responsibility for the arrear of revenue on account of which the property may have been sold, shall recover from the distrainer the full value of such property, with interest, costs and damages, according to the circumstances of the case. But claims to crops upon the ground, or to gathered products of the ground, attached in the possession of the defaulter, whether founded upon a previous sale, mortgage or otherwise, shall not bar the prior claim of revenue due from the ground upon which such crop or product may have been grown.

Claims to property distrained and sold.

Revenue to be the first charge.

18. Where it is proved to the satisfaction of any Civil Court of competent jurisdiction that any person has forcibly or clandestinely taken away property once distrained, the Court may summarily cause such property to be restored to the distrainer. The offender shall further be liable to the penalties prescribed by the Indian Penal Code.

Penalty for forcibly or clandestinely taking away distrained property.

19. It shall be lawful for the distrainer to force open any stable, cow-house, granary, godown, out-house or other building, and he may also enter any dwelling house, the outer door of which may be open, and may break open the door of any room in such dwelling-house, for the purpose of attaching property belonging to a defaulter and lodged therein: Provided always that it shall not be lawful for such distrainer to break open or enter any apartment in such dwelling-house appropriated for the zanana or residence of women, except as hereinafter provided.

What places distrainer may force open.

Powers of distrainer to force open doors in the presence of a Police officer.

20. Where a distrainer has reason to suppose that the property of a defaulter is lodged within a dwelling-house the outer door of which is shut, or within any apartments appropriated to women which by the usage of the country, are considered private, such distrainer shall represent the same to the officer in charge of the nearest Police-station. On such representation, the officer in charge of the said station shall send a Police officer to the spot, in presence of whom the distrainer may force open the outer door of such dwelling-house, in like manner as he may break open the door of any room within the house except the zanana. The distrainer may also, in the presence of the Police officer, after due notice given for the removal of women within a zanana, and after furnishing means for their removal in a suitable manner (if they be women of rank who according to the customs of the country cannot appear in public), enter the zanana-apartments for the purpose of distraining the defaulter's property deposited therein; but such property, if found, shall be immediately removed from such apartments, after which they shall be left free to the former occupants.

Punishment for unlawful entry.

21. Persons entering the apartments of women or forcing open the outer door of dwelling-houses contrary to the provisions of this Regulation shall, on conviction before a Magistrate, be liable to a fine not exceeding five hundred rupees, or to imprisonment of either description for a term which may extend to six months.

Proclamation to be made of the time of sale, and of the property to be sold.

22. The public officer empowered by the Chief Commissioner, under section six, to sell distrained property, shall cause to be affixed to the outer door of the defaulter's house, or on the premises where the property may have been distrained, a list of the property to be sold, with a notice specifying the place where, and the day and hour at which, the distrained property will be sold, and shall cause proclamation of the intended sale to be made by affixing a copy in the village ambála or meeting-place, or by beat of drum, or by other customary mode in the village to which the lands on which the arrear has accrued may belong, and in such place or places as the Superintendent, or other officer empowered by the Superintendent in that behalf, may consider necessary to give due publicity to the sale.

No sale shall take place until after the expiration of a period of fifteen days from the date on which the notice may be published as above stated.

Sale how to be conducted.

23. At the appointed time, the property shall be put up in one or more lots as the said officer may consider advisable, and shall be disposed of to the highest bidder. Where the property is sold for more than the amount of the arrear, the overplus, after deducting expenses of process and interest, shall be paid to the defaulter.

Payment on the purchase of distrained property how to be made.

24. The property shall be paid for in ready money at the time of sale, or as soon after as the officer holding the sale shall appoint; and the purchaser shall not be permitted to carry away any part of the property until he has paid for the same in full.

Re-sale in case of default.

Where the purchaser fails in the payment of the purchase-money, the property shall be re-sold, and the defaulting purchaser shall be liable for any loss arising, as well as the expenses incurred on the re-sale. Where the property on the second sale is sold for a higher price than at the first sale, the difference or increase shall be the property of him on whose account the said first sale was made.

Demand to be served prior to attachment of land.

25. Before the Superintendent, or other officer empowered by the Superintendent in that behalf, proceeds to attach the land of the defaulter, or buildings thereon, he shall cause a written demand to be served upon the defaulter specifying the amount due, the estate or land in respect of which it is claimed, the name of the party in arrear, the batta due to the person who shall serve the demand, and the time allowed for payment, which shall be fixed with reference to the distance from the land on which the arrear is due to the place at which the money is to be paid.

Mode of service.

Such demand shall be served by delivering a copy to the defaulter, or to some adult male member of his family at his usual place of abode, or to his authorized agent, or by affixing a copy thereof on some conspicuous part of his last known residence, or on some conspicuous part of the land about to be attached.

Consequence of defaulter neglecting to pay.

26. When the amount due has not been paid pursuant to the terms of the demand, and no arrangement for securing the same has been entered into to the satisfaction of the Superintendent, or other officer empowered by the Superintendent in that behalf, he shall proceed to recover the arrear by the attachment and sale of the defaulter's land in the following manner.

Mode of attachment.

27. The attachment shall be effected by affixing a notice thereof to some conspicuous part of the land. The notice shall set forth that unless the arrear, with interest and expenses, be paid within the date therein mentioned, the land will be brought to sale in due course of law. The attachment shall be notified by public proclamation on the land and by publication of the notice in the official Gazette.

Appointment of agents.

28. It shall be lawful for the Superintendent, when attaching the land of a defaulter, or at any time during such attachment, to assume the management of the property attached. In such case he shall appoint an agent with a proper establishment of officers to manage the property, and shall give the agent a certificate of appointment with written instructions under his seal and signature, and the expenses of management shall be defrayed out of the income of the property: Provided always that where the property may be too inconsiderable to admit of its being charged with the salary of an agent, it shall be committed to the care of such Revenue-officer as the Superintendent may select, who shall be subject to all the provisions hereinafter contained in reference to agents.

In certain cases Revenue-officer to take charge.

Notice of assumption of management.

29. Notice of the assumption of management shall forthwith be served on the defaulter in the manner described in section twenty-five, and shall be notified by public proclamation on the land and by publication in the official Gazette.

Duties of agent.

30. It shall be the duty of the agent, during the continuance of management under section twenty-eight, to collect the rents and profits due, or accruing due, upon the estate, according to the engagements subsisting between the defaulter and the parties holding under him, or according to established usage where no specific engagements exist.

The agent shall keep accounts of all his receipts and disbursements, and submit the same and pay over the balance to the Superintendent, or other officer empowered by the Superintendent in that behalf, monthly or whenever required; and the defaulter shall be at liberty to inspect the accounts at all reasonable times, and to take copies of the same at his own expense without fee.

Liability of agent to suit or prosecution.

31. It shall be lawful for the defaulter to proceed by prosecution or suit against the agent in respect of any criminal or illegal act done by him to the injury of the defaulter or his estate; and all tenants or other persons holding by subordinate title shall have the same remedies against him as they would have had against the defaulter if the act were done by the defaulter.

Effect of existing agreements between landholder and tenants.

32. All engagements entered into between the landholder and his tenants, except such as are hereinafter mentioned, shall be binding upon the Superintendent during attachment; but all such engagements made collusively with a view to defeat or delay the effect of the attachment, and all leases of land at a rate lower than the usual rates of assessment, and not made *bonâ fide* for the purpose of erecting factories or buildings, or of bringing waste-land into cultivation, and all engagements made subsequently to attachment, shall be nul and void against the Superintendent if he shall so declare; subject, however, to the right of the parties to such agreement to bring a suit against the Superintendent in the ordinary tribunals to establish the same; and all charges or incumbrances upon such land shall be postponed to the payment of the public revenue.

Payments by tenants.

33. All payments on account of rent or profits actually due made before public notice of assumption of management, to or on behalf of any landholder by any person holding under him, shall be valid against the Superintendent; and all such payments made after public notice of such assumption, or made before they were actually due, shall be nul and void against the Superintendent, who shall be entitled to recover as arrears of rent the full amount from the parties by whom it was paid, leaving them to sue the defaulter in the ordinary courts of law.

Mode of settlement on withdrawal of attachment.

34. All sums received from the property attached, after paying the expenses of attachment and management, shall be carried to the credit of the defaulter in discharge of the arrears due, and interest thereon at the rate of six per cent, per annum; and as soon as all arrears, interest, costs of attachment and expense of management have been liquidated, the attachment shall be withdrawn, and a full account rendered of all receipts and disbursements during its continuance.

35. Any person claiming an interest in land which has been or is about to be attached may obtain its release by paying the arrears, interest and costs incurred; and all such sums, if paid by a tenant, may be deducted from any rent then or afterwards due by him to the defaulter; and if paid by a *bonâ fide* mortgagee or other incumbrancer upon the estate, shall constitute a debt from the defaulter to him, and shall be a charge upon the land, but shall only take priority over other charges according to the date at which the payment was made.

Persons interested in land may release it from attachment.

36. In the sale of immovable property under this Regulation, the following rules shall be observed :—

Rules to be observed in sale of immovable property.

First.—The sale shall be by public auction to the highest bidder. The time and place of sale shall be fixed by the Superintendent, or other officer empowered by the Superintendent in that behalf. The time may be either previous to or after the expiration of the official year.

Public auction.

Second.—Previous to the sale, the Superintendent, or other officer empowered by the Superintendent in that behalf, shall issue a notice thereof in English and in Kanarese specifying the name of the defaulter, the position and extent of land and of the buildings thereon, the amount of revenue assessed on the land or upon its different sections, the proportion of the public revenue due during the remainder of the current official year, and the time, place and conditions of sale. This notice shall be fixed up one month at least before the sale in the Superintendent's Office and in the taluk cutcherry, in the nád cutcherry and on some conspicuous part of the land.

Notification one month before sale.

Third.—A sum of money equal to fifteen per cent of the price of the lands shall be deposited by the purchaser in the hands of the Superintendent, or other officer empowered by the Superintendent in that behalf, at the time of the purchase; and where the remainder of the purchase-money may not be paid within thirty days, the money so deposited shall be liable to forfeiture.

Deposit and payment of balance.

Fourth.—Where the purchaser refuses or omits to deposit the said sum of money, or to complete the payment of the remaining purchase-money, the property shall be re-sold at the expense and hazard of such purchaser, and the amount of all loss or expense which may attend such refusal or omission, shall be recoverable from such purchaser in the same manner as arrears of public revenue. Where the lands on the second sale are sold for a higher price than at the first sale, the difference or increase shall be the property of him on whose account the said first sale was made.

Re-sale in default of payment.

Fifth.—All persons bidding at a sale may be required to state whether they are bidding on their own behalf or as agents, and in the latter case to deposit a written authority signed by their principals. If such requisition be not complied with, their bids may be rejected.

Agents to name their principals.

37. The defaulter, or any person acting on his behalf or claiming an interest in the land, may tender to the officer appointed to conduct the sale the full amount of the arrears of revenue with the interest thereon, and all charges which have been incurred in demanding the arrears, or in attaching or managing the estate or in taking the steps necessary for sale, and thereupon the sale shall be stayed: Provided that such tender must be made before sunset on the day previous to that appointed for the sale, and all sums so paid by any tenant, or *bonâ fide* mortgagee, or other incumbrancer, shall be deemed payments under section thirty-five.

Tender of arrears up to sunset on day previous to sale.

38. Lands purchased at a public sale shall be registered in the name of the actual purchaser, who shall receive a certificate of sale signed and sealed by the Superintendent, which shall be conclusive evidence of the fact of the purchase, and no proof of the Superintendent's seal or signature shall be necessary, unless the authority before whom it is produced has reason to doubt its genuineness.

Purchaser to be registered.

Effect of certificate.

39. When lands are purchased at public sale, the Superintendent, or other officer empowered by the Superintendent in that behalf, shall publish in the villages in which the land sold may be situated, in the cutcherry of the taluk and nád, in the head cutcherry of the district, and in the official Gazette, the name of the purchaser and the

Proclamation of sale.

date of purchase, together with a declaration of the lawful transfer to such purchaser of all the rights and property of the former landholder in the said lands.

Delivery of possession.

40. Where, notwithstanding such publication, any lawful purchaser of land is resisted and prevented from obtaining possession of his purchased land, any Court of competent jurisdiction, on application and production of certificate of sale provided for by section thirty-eight, shall cause the proper process to be issued for the purpose of putting such purchaser in possession in the same manner as if the purchased lands had been decreed to the purchaser by a decision of the Court.

Contracts with and payments to defaulter how far binding on purchaser.

41. All contracts entered into by the defaulter with his tenants, and all payments to him by them, shall be binding upon the purchaser to the same extent and under the same conditions as laid down in sections thirty-two and thirty-three of this Regulation.

Sale to be free of all incumbrances.

Disposal of surplus.

42. All lands brought to sale on account of arrears of revenue shall be sold free of all incumbrances, and if any balance shall remain after liquidating the arrears with interest, and the expenses of attachment and sale, and other costs due in respect of such arrears, it shall be paid over to the defaulter unless such payment be prohibited by the order of a Court of competent jurisdiction.

Arrears of rent due to defaulter from under-tenants on day of sale how to be recovered.

43. Arrears of rent which on the day of sale may be due to the defaulter from his under-tenants shall, in the event of the sale, be recoverable by him after the sale by any process, except distraint, which might have been used by him for that purpose before the said sale.

Sale of land.

44. The Superintendent, or other officer empowered by the Superintendent in that behalf, may sell the whole or any portion of the land of a defaulter in discharge of arrears of revenue: Provided that where the land on which the demand is due consists of a warg or farm which is readily divisible into one or more compact blocks, no larger section in the land shall be sold than may be sufficient to discharge the arrears with interest, and expenses of attachment, management and sale.

Sale may be postponed on tender of security.

45. When a defaulter tenders security, the Superintendent, or other officer empowered by the Superintendent in that behalf, may accept it and postpone the sale of the defaulter's property upon such conditions and until such time as he may appoint; in the event of default being made in the performance of such conditions, the Superintendent or such officer may sell the property and proceed against the defaulter or against his security, or both.

Mode of enforcing payment by sureties.

46. All the remedies prescribed by this Regulation in case of revenue defaulters may be employed against their sureties, and the Superintendent, or other officer empowered by the Superintendent in that behalf, may enforce the same simultaneously with, or either previously or subsequently to, their enforcement against the principal; so, nevertheless, that no more than the total sum in arrears, and interest with costs and charges, shall be realized from both.

Similar process in case of other species of revenue, advances, fees and cesses.

47. All arrears of revenue, other than land-revenue, due to Government, all advances made by Government to owners and occupiers of land for the relief of distress or any purpose connected with agricultural objects but not specified in the Land Improvement Act, 1871, and all fees or other dues payable by any person to or on behalf of the village servants employed in revenue or police duties, and all cesses lawfully imposed upon land, may be recovered in the same manner as arrears of land-revenue under the provisions of this Regulation, unless the recovery thereof shall have been or may hereafter be otherwise specially provided for.

Process-servers to be paid batta.

48. Persons employed in serving notices or any other process under this Regulation shall be entitled to batta at such rates as may, from time to time, be fixed by the Chief Commissioner with the sanction of the Governor General in Council and published in the official Gazette.

49. The batta mentioned in the foregoing section, as well as interest and all costs and charges incurred under the authority of this Regulation, shall be recoverable from the defaulter and his sureties in the same manner as arrears of revenue.

Interest and charges recoverable as arrears.

50. Where property having been attached or distrained is ordered to be put up for sale and the sale is countermanded, the proprietor shall nevertheless be responsible for the expenses incurred in consequence of the attachment or distraint in the same manner as if the sale had taken place ; and in the event of such proprietor omitting to discharge the amount it shall be recoverable by the process under which the original demand would have been recoverable.

Expense of countermanded sales to be sustained by defaulter: and recovered as an arrear.

51. Every person making a payment of revenue shall be entitled to a receipt for the same, signed by the Superintendent, or other officer empowered by the Superintendent in that behalf;

Receipts of payment of revenue.

Such receipt shall state the name of the person making the payment and the subject-matter in respect of which it is paid, and, in case of land-revenue, shall describe the land on which the assessment is due, and the names of the persons entered in respect thereof in the settlement account.

52. No Court of civil judicature shall take into consideration or decide any question as to rate of land revenue payable to Government, or as to the amount of assessment fixed or to be hereafter fixed by the Government.

Civil Court not to take cognizance of questions relating to rate of revenue.

53. Nothing contained in this Regulation shall be held to prevent parties deeming themselves aggrieved by any proceedings under this Regulation, except as hereinbefore provided, from applying to the Civil Courts for redress : Provided that Civil Courts shall not take cognizance of any suit other than a suit for compensation instituted by such parties for any such cause of action, unless such suit shall be instituted within six months from the time at which the cause of action arose.

Suits by persons aggrieved by proceedings under this Regulation.

Limitation of suits.

54. No suit brought against the officer holding at any time the office of Superintendent of Coorg by any person deeming himself aggrieved by anything done or purporting to be done under this Regulation shall abate by reason of the departure from his district of the officer against whom such suit shall have been brought ; but the suit may be continued against the successor of such Superintendent in all respects as though it had been instituted against himself. A suit may be brought against any Superintendent in his official capacity on account of anything done or purporting to have been done under this Regulation by his predecessor subject to the limitation prescribed in the preceding section : Provided that no Superintendent shall be personally liable for any official act of his predecessor.

Suits against Superintendent to survive against his successor, or to be originally maintainable against him.

No personal liability for acts of predecessor.

55. This Regulation shall take effect from the date of its publication in the official Gazette.

D. FITZPATRICK,
Secretary to the Govt. of India.

FOREIGN DEPARTMENT.

NOTIFICATION.

GENERAL.

Simla, the 1st October 1880.

No. 1911-*G.-G.*—Major C. Bowen, R. E., Executive Engineer, 1st Grade, Mysore, is appointed to officiate as Superintending Engineer and Secretary to the Chief Commissioner in the Public Works Department during the absence of Lieutenant-Colonel W. R. Johnson, M. S. C., on privilege leave.

H. M. DURAND,
Under-Secy. to the Govt. of India.

THE

MYSORE GAZETTE.

No. 42 Published by Authority. of 1880.

BANGALORE, SATURDAY, OCTOBER 23, 1880.

☞ Separate paging is given to this Part in order that it may be filed as a separate compilation.

CONTENTS.

PAGE.

PART I.—Notifications by the Chief Commissioner of Mysore and Coorg.—Notifications by the Government of India... 307—319

PART II.—Notifications, &c., by the Judicial Commissioner; Survey and Settlement Commissioner; Superintendent of Inam Settlements; Deputy Accountant General; Public Works Officers; Military Assistant; Inspector General of Registration; Director of Public Instruction; Deputy Surgeon General of Hospitals; Anche Bakshi; President of the Bangalore Municipal Boards; District and Sessions Judges; Deputy Commissioners of Districts.—Season Reports; Meteorological Registers; Postal Notices, &c. ... ... 523—537

PART III.—Acts and Bills of the Governor Genl. of India in Council, &c.—Bill relating to Government Securities ... 79—81

PART IV.—Miscellaneous Papers ... ... Nil.

SUPPLEMENT.—Abstract of Season or Intermediate Reports, &c.

PART I.

Notifications by the Chief Commissioner of Mysore.

GENERAL DEPARTMENT.

NOTIFICATIONS.

The 13th October 1880.

No. 113.—Mr. Garrett, the Superintendent of the Government Press and Compiler of the Mysore Gazette, having retired from the service, the Chief Commissioner is pleased to direct that, pending the final arrangements which will be made, Mr. Hudson, Deputy Accountant General, shall fill those posts temporarily, in addition to his other duties.

The 16th October 1880.

No. 114.—Mr. D. E. Hutchins, Assistant Conservator of Forests, Nundydroog Division, is granted examination leave from the 14th instant to the 1st November 1880, inclusive, under Chapter I, Paragraph 22 of the Forest Department Code.

The 21st October 1880.

No. 115.—Mr. P. N. Púrnaiya, B. A., Assistant Commissioner, Mysore District, is granted privilege leave of absence for four days in extension of that granted in Chief Commissioner's Notification No 79, dated 30th July 1880.

Mr. Púrnaiya returned to duty on the forenoon of the 9th instant.

No. 116.—Mr. P. N. Krishna Múrti, B. L., Deputy Commissioner, returned to duty from the three months' privilege leave granted to him in Notification No. 59, dated 7th July last, on the morning of the 14th October 1880.

By Order,

W. J. CUNINGHAM,
Secretary.

REVENUE DEPARTMENT.

NOTIFICATIONS.

The 7th October 1880.

No. 60.—It is hereby notified for public information that all the rights of the present jodidars in the undermentioned jodi villages which have been duly attached in satisfaction of the arrears of revenue due to Government (as shewn in the subjoined statement) by the said jodidars, will be sold by public auction at the places and on the dates mentioned in the annexed statement. The sale will commence at 11 A. M. on the dates specified and the villages will be knocked down to the highest bidder without reserve.

2. The purchaser will be required to deposit 25 per cent of the purchase money at the time of sale and where the remainder of the purchase money may not be paid within 15 days from the day of sale, the money so deposited shall be liable to forfeiture.

3. When such deposit shall not be made nor the remaining purchase money paid up, the lands shall be re-sold at the expense and risk of the first purchaser.

4. Persons bidding at the sale may be required to state whether they bid on their own account or as agents, and in the latter case to deposit a written authority signed by their principals, otherwise their bids may be rejected.

5. The sale shall be stayed, if the defaulter, or any other person acting on his behalf or claiming an interest in the land, tenders the full amount of the arrears of revenue with the interest and other charges, provided such tender be made before sunset on the day previous to that appointed for the sale.

6. The sale of the property will not become absolute until the sale has been confirmed by the Chief Commissioner.

7. Purchasers having completed the payment of the purchase money will, as soon as the sale has been confirmed by the Chief Commissioner, be placed in immediate possession, and the village will be registered in the name of the purchaser, and a certificate of sale signed and sealed by the Deputy Commissioner will be granted to him. It is to be distinctly understood that the Government are not responsible for errors of description and in estimated extent.

8. Provided parties deeming themselves aggrieved by the sale shall be at liberty to appeal to the Chief Commissioner within 30 days from the day of sale, and the purchase shall be conditional on the final order in such appeal.

District.	Taluk.	Hobli.	Village.	Names of Jodidars.	Boundaries of the Village.	Estimated Extent.	Estimated gross rental or Beriz.	Quit-Rent payable annually to Government.	Arrears of Government Revenue for which the Village is to be sold. Years.	Amount.			Date of Sale, &c.
Kadur.	Chikmagalur.	Marle.	Shettigere.	Nanjundabhat and 44 others.	Bounded on the east by Koratakere boundary, on the south Kyatanahalli, on the west Bennur and on the north Hanike village.	A. 1,028 G. 13.	1,667—12—0.	422—0—0.	1879—80.	523	4	3	10th November 1880, at the Taluk Office before the Amildar.
Do	Do	Malalur.	Badanike.	Nanjundabhat and 35 others.	Bounded on the east by Beranji river, on the west Terugane village limit, on the south Biranji river, on the north Kundur village limit.	A. 569 G.24.	865—14—8.	286—0—0.	1879—80.	227	3	5	10th November 1880 at the Taluk Office before the Amildar.

The 14th October 1880.

No. 61.—The Chief Commissioner has been pleased to sanction the reduction of the License fee on Pottery Kilns levied under the provisions of Section 185, Bangalore Municipal Regulations of 1871, from Rs. 5 to 4 per Kiln per annum.

The 19th October 1880.

No. 62.—It is hereby notified for public information that all the rights of the present jodidars in the undermentioned jodi village in the Chikmagalur Taluk of the Kadur District, which has been duly attached in satisfaction of the arrears of revenue due to Government (as shewn in the subjoined statement) by the said jodidars, will be sold by public auction at the place and on the date mentioned in the annexed statement. The sale will commence at 11 A. M. on the date specified and the village will be knocked down to the highest bidder without reserve.

2. The purchaser will be required to deposit 25 per cent of the purchase money at the time of sale and where the remainder of the purchase money may not be paid within 15 days from the day of sale the money so deposited shall be liable to forfeiture.

3. When such deposit shall not be paid, nor the remaining purchase money paid up, the lands shall be re-sold at the expense and risk of the first purchaser.

4. Persons bidding at a sale may be required to state whether they bid on their own account, or as agents, and in the latter case to deposit a written authority signed by the principals, otherwise their bids may be rejected.

5. The sale shall be stayed, if the defaulter, or any other person acting on his behalf or claiming an interest in the land, tenders the full amount of the arrears of revenue with interest and other charges, provided such tender be made before sunset on the day previous to that appointed for the sale.

6. The sale of the property will not become absolute, until the sale has been confirmed by the Chief Commissioner.

7. Purchasers having completed the payment of the purchase money will, as soon as the sale has been confirmed by the Chief Commissioner, be placed in immediate possession, and the village will be registered in the name of the purchaser and a certificate of sale signed and sealed by the Deputy Commissioner will be granted to him. It is to be distinctly understood that the Government are not responsible for errors of description and in estimated extent.

8. Provided parties deeming themselves aggrieved by the sale shall be at liberty to appeal to the Chief Commissioner within thirty days from the day of sale and the purchase shall be conditional on the final order in such appeal.

District.	Taluk.	Hobli.	Village.	Name of Jodidar.	Boundaries of the Village.	Estimated Extent.	Estimated Beriz.	Quit-Rent payable annually to Government.	Arrears of Revenue for which the Village is to be sold.				Date of Sale, &c.
									Years.	Amount.			
Kadur.	Chikmagalur.	Karagodu.	Mallenahalli.	Subba Bhatt and 2 others.	Bounded on the north by Gollarahalli, south by Nadahalli, east by Honnenahalli, west by Kabbikere.	A. 754, C. 34.	Rs. 365—14—1.	„ 224—6—0.	1879—80...	101	11	1	16th November 1880, at Chikmagalur before the Revenue Assistant Commissioner.

The 20th October 1880.

SCHOOL OF ENGINEERING AND NATURAL SCIENCE.

No. 63.—In continuation of Notification No. 52 of the 16th instant, the following arrangements regarding instruction in Botany, Vegetable Physiology and Practical Gardening are notified :—

1. Lectures on the above subjects will be delivered at the Lal-Bagh, by Mr. Cameron, the Superintendent, in the following order, commencing at 7 A. M. each day, the first lecture to be delivered on Monday the 1st November 1880 :—

Botany	on Mondays.
Vegetable Physiology	on Thursdays.
Practical Gardening	on Saturdays.

2. The lectures are open to students and masters from Government and Aided schools on payment of rupee one a month in advance, and to the general public on payment of rupees two a month in advance. A register of candidates for admission will be kept at the Office of the Director of Public Instruction, and at the Lal-Bagh. For the convenience of the general public, tickets admitting to the lectures for three months will be available at the Lal-Bagh, and at the Book Depository adjoining the Main Guard.

3. The following is a syllabus of the proposed lectures :—

BOTANY.

I. Definitions and Descriptive Botany.—1. The plant in general. 2. The root. 3. The stock. 4. The stem. 5. The leaves. 6. Scales, bracts, and stipules. 7. Inflorescence and bracts. 8. The flower in general. 9. The calyx and corolla or perianth. 10. The stamens. 11. The pistil. 12. The fruit. 13. The seed. 14. Accessory organs.

II. Classification or Systematic Botany.—1. The classes and sub-classes. 2. Divisions. 3. Natural orders or families. 4. Genera. 5. Species. 6. Varieties.

III. Economic Botany.—Plants yielding 1. Food. 2. Fibre. 3. Dyes. 4. Medicine. 5. Oils. 6. Timber. 7. Starch, &c. 8. Plants of scenic value.

IV. Geographical Botany.—1. Indigenous plants. 2. Foreign plants. 3. Acclimatization of plants.

Text Books.—Lindley's School Botany, Oliver's Indian Botany, Drury's Useful Plants of India, Von Mueller's Select Plants for Extra-Tropical Countries, Balfour's Botany.

VEGETABLE PHYSIOLOGY.

I. Structure and Growth of the Elementary Tissues.
II. Arrangement of the Elementary Tissues, or Structure of the Organs of Plants.
III. Growth of the Organs.
IV. Functions of the Organs.
V. Functions of Flowers.
VI. Influence of Temperature, Electricity and Light on Plants.

PRACTICAL GARDENING.

1. The quality of soils and manures. 2. The rotation of crops. 3. The season of cropping. 4. The propagation of plants. 5. The culture of fruit trees. 6. The culture of vegetables. 7. The culture of flowers, &c.

Text Books.—Lindley's School Botany, Balfour's Botany, Lindley's Theory and Practice of Gardening, Johnson's Science and Practice of Gardening.

By Order,

C. RANGACHARLU,
Revenue Secretary.

PUBLIC WORKS DEPARTMENT.

NOTIFICATIONS.

The 15th October 1880.

NO. 29.—Mr. F. Sharp, Assistant Engineer, will, on his return from privilege leave, assume temporary charge of the office of Assistant to Superintending Engineer until further orders.

The 21st October 1880.

NO. 30.—With reference to Public Works Department Notification, dated 15th current, Assistant Engineer Mr. F. Sharp returned to duty from privilege leave on the forenoon of the 17th idem.

2. The unavailed portion of privilege leave granted to that officer in Notification dated 2nd July 1880 is cancelled at his request.

By Order,

C. BOWEN, *Major*, R. E.,
Offg. Secretary, P. W. D.

Notifications by the Chief Commissioner of Coorg.

GENERAL.

NOTIFICATIONS.

The 16th October 1880.

No. 18.—The annual auction sale of sandalwood of about ninety tons more or less, the produce of Coorg, will be held on the 3rd December 1880 at the Fraserpet Sandal Koti.

Terms of sale.—Those notified in *Mysore Gazette* No. 48 of the 5th December 1874.

All sums should be paid up before the 3rd of March 1881, failing which the penalties will be enforced.

The 19th October 1880.

No. 19.—The Revd. G. Richter, Inspector of Schools in Coorg, retired from the service on the 1st October 1880.

By Order,

W. J. CUNINGHAM,
Secretary.

Notifications, &c., by the Government of India.

LEGISLATIVE DEPARTMENT.

NOTIFICATION.

Simla, the 24th September 1880.

No. 15.—Whereas the Secretary of State for India has by Resolution in Council declared the provisions of the Statute 33 Vic., cap. 3, section 1, to be from and after the 1st October 1877 applicable to the territories forming the Chief Commissionership of Coorg;

And whereas the Chief Commissioner of Coorg has proposed to the Governor General in Council a draft of the following Regulation, together with the reasons for proposing the same;

And whereas the Governor General in Council has taken such draft and reasons into consideration, and has approved of such draft, and the same has received the Governor General's assent;

In pursuance of the direction contained in the said section, the said Regulation is now published in the *Gazette of India.*

REGULATION No. III OF 1880.

A Regulation to declare and amend the law relating to the collection of the Public Revenue in the Province of Coorg.

Preamble.

WHEREAS it is expedient to declare and amend the law relating to the collection of the public revenue in the Province of Coorg; It is hereby enacted as follows:—

Interpretation-clause. "Landholder."

1. The term "Landholder," as used in this Regulation, shall mean and include all holders of land under jamma, sagu or otherwise subject to the payment of revenue direct to Government.

"Public revenue."

"Public Revenue" due on land shall, for the purposes of this Regulation, be taken to include cesses or other dues payable to Government on account of water supplied for irrigation.

"Chief Commissioner" and "Superintendent."

"Chief Commissioner" and "Superintendent," as used in this Regulation, mean the Chief Commissioner of Coorg and the Superintendent of Coorg respectively.

129

2. The land, the buildings upon it and its products shall be regarded as the security for the public revenue.

Land, the security for the revenue.

3. Every landholder shall pay to the Superintendent, or other officer empowered by him to receive it, the revenue due upon his land on or before the day on which it falls due, according to the khistbandi or other engagement; and where no particular day is fixed, then within the time when the payment falls due according to local usage; Provided that it shall be lawful for the Chief Commissioner, by notification published in the official Gazette, to alter and fix from time to time the amount of the several khists or instalments, and the dates at which they shall respectively become payable.

Landholder when and to whom to pay his khist.

4. When the whole or a portion of a khist is not so paid, the amount of the khist or of its unpaid portion shall be deemed to be an arrear of revenue.

The whole or portion of a khist remaining unpaid shall be deemed to be an arrear of revenue.

5. Whenever revenue is in arrear, it shall be lawful for the Superintendent, or other officer empowered by the Superintendent in that behalf, to proceed to recover the arrear, together with interest and costs of process, by the sale of the defaulter's movable and immovable property, in manner hereinafter provided.

Arrear of revenue how to be recovered.

6. The Chief Commissioner may, from time to time, appoint such officer or officers as may be necessary to sell, subject to all the rules and provisions contained in this Regulation, property distrained for arrears of revenue. Such officer or officers shall be subject also to the control and superintendence of the Superintendent.

Chief Commissioner empowered to appoint officer to sell distrained property.

7. Arrears of revenue shall bear interest at the rate of six per cent per annum; but the Superintendent may remit, for sufficient cause shewn, the interest due on the arrear or any part of it.

Arrears of revenue to bear interest.

8. In the seizure and sale of movable property for arrears of revenue, the following rules shall be observed:—

Rules for seizure and sale of movable property.

First.—The Superintendent, or other officer empowered by the Superintendent in that behalf, shall furnish to the person employed to distrain the property of a defaulter a demand in writing, and signed with his name, specifying the name of the defaulter, the amount of the arrear for which the distress may be issued, and the date on which the arrear fell due. The person employed to distrain shall produce the writing which, if the arrear, together with the batta due to him under section forty-eight, be not at once paid, shall be his authority for making the distress; and on the day on which the property may be distrained, shall deliver a copy of such writing to the defaulter, endorsing thereon a list or inventory of the property distrained and the name of the place where it may be lodged or kept.

Demand in writing.

Defaulter to be served with a copy.

Second.—The writing shall further set forth that the distrained property will be immediately brought to public sale, unless the amount, with interest, batta and all the expenses of the distress, be previously discharged.

Writing to state that the distrained property will be sold.

Third.—When a defaulter is absent, a copy of the writing, with the endorsement, shall be fixed or left at his usual place of residence, or on the premises where the property may have been distrained, before the expiration of the third day calculating from the day of the distress.

Mode of service when defaulter is absent.

9. When the amount due has not been paid pursuant to the terms of the demand, and no arrangement for securing the same has been entered into to the satisfaction of the Superintendent, or other officer empowered by the Superintendent in that behalf, the distrainer shall transmit an inventory of the property distrained to the nearest public officer empowered by the Chief Commissioner, under section six, to sell distrained property, in order that it may be publicly sold for the discharge of the arrear due, with interest, batta and cost of distraint.

Consequence of defaulter neglecting to pay after notice.

10. Where a defaulter tenders payment of the arrear demanded after his property has been distrained, and prior to the day fixed for sale, together with payment of interest, batta and all necessary expenses attending distress, the distrainer shall receive the amount immediately upon the same being tendered, and shall forthwith release the property.

On tender of arrear and expenses prior to day of sale, distress to be withdrawn.

Distrained crops how to be dealt with.

11. The distrainer attaching the crops or ungathered products of the land belonging to a defaulter may cause them to be sold when fit for reaping or gathering, or at his option may cause them to be reaped or gathered in due season, and stored in proper places until sold. In the latter case, the expense of reaping or gathering and storing such crops or products shall be defrayed by the owner upon his redeeming the property, or from the proceeds of the sale in the event of its being sold.

Tenant may pay arrears and terminate attachment.

When crops or products belonging to a tenant have been sold, it shall be lawful for such tenant to deduct the value of the crops or products so sold from any rent which may be due by him, then or afterwards, to the defaulter, in respect of the land on which such crops or products have been grown. It shall also be lawful for a tenant whose crops are attached for an arrear of revenue to pay the arrear and deduct the amount in the aforesaid manner from any rent due by him, then or afterwards.

Distrained cattle or goods not to be used.

12. The distrainer shall not work the bullocks or cattle, or make use of the goods or effects distrained; he shall provide the necessary food for the cattle or live-stock, the expense attending which shall be defrayed by the owner upon his redeeming the property or from the proceeds of the sale in the event of its being sold.

Officer responsible on neglect in respect of distrained property.

13. Where property distrained is stolen or lost or damaged by reason of the necessary precautions for its due preservation not having been taken, or from its having been improperly worked or made use of, the amount of such loss or damage shall be recoverable by summary process by the Superintendent from the officer whose neglect or act occasioned the loss or damage, and the amount when recovered, shall be paid to the person damnified.

Distress to be proportionate to the arrear.

14. The distress levied shall not be excessive, that is to say, the property distrained shall be as nearly as possible proportionate to the amount of the arrears; and such cattle and agricultural implements as may be required by the defaulter for the purpose of cultivation shall be exempt from attachment.

Time of distress.

15. Distress shall be made after sunrise and before sunset, and not otherwise.

Penalty for fraudulent conveyance of property to prevent distress.

16. Where a defaulter makes a fraudulent conveyance of property to prevent the distress for arrears, any Civil Court of competent jurisdiction, upon proof thereof, shall summarily cause the property to be delivered up to the distrainer. The defaulter shall further be liable to the penalties prescribed by section 424 of the Indian Penal Code.

Claims to property distrained and sold.

17. Where any person, not being a defaulter or responsible for a defaulter, claims a right to the property distrained, and the distrainer may notwithstanding cause the same to be sold, such claimant, on proof of such right in any Civil Court of competent jurisdiction, and in the event of the distrainer being unable to prove the responsibility for the arrear of revenue on account of which the property may have been sold, shall recover from the distrainer the full value of such property, with interest, costs and damages, according to the circumstances of the case. But claims to crops upon the ground, or to gathered products of the ground, attached in the possession of the defaulter, whether founded upon a previous sale, mortgage or otherwise, shall not bar the prior claim of revenue due from the ground upon which such crop or product may have been grown.

Revenue to be the first charge.

Penalty for forcibly or clandestinely taking away distrained property.

18. Where it is proved to the satisfaction of any Civil Court of competent jurisdiction that any person has forcibly or clandestinely taken away property once distrained, the Court may summarily cause such property to be restored to the distrainer. The offender shall further be liable to the penalties prescribed by the Indian Penal Code.

What places distrainer may force open.

19. It shall be lawful for the distrainer to force open any stable, cow-house, granary, godown, out-house or other building, and he may also enter any dwelling house, the outer door of which may be open, and may break open the door of any room in such dwelling-house, for the purpose of attaching property belonging to a defaulter and lodged therein: Provided always that it shall not be lawful for such distrainer to break open or enter any apartment in such dwelling-house appropriated for the zanana or residence of women, except as hereinafter provided.

Powers of distrainer to force open doors in the presence of a Police officer.

20. Where a distrainer has reason to suppose that the property of a defaulter is lodged within a dwelling-house the outer door of which is shut, or within any apartments appropriated to women which by the usage of the country, are considered private, such distrainer shall represent the same to the officer in charge of the nearest Police-station. On such representation, the officer in charge of the said station shall send a Police officer to the spot, in presence of whom the distrainer may force open the outer door of such dwelling-house, in like manner as he may break open the door of any room within the house except the zanana. The distrainer may also, in the presence of the Police officer, after due notice given for the removal of women within a zanana, and after furnishing means for their removal in a suitable manner (if they be women of rank who according to the customs of the country cannot appear in public), enter the zanana-apartments for the purpose of distraining the defaulter's property deposited therein; but such property, if found, shall be immediately removed from such apartments, after which they shall be left free to the former occupants.

Punishment for unlawful entry.

21. Persons entering the apartments of women or forcing open the outer door of dwelling-houses contrary to the provisions of this Regulation shall, on conviction before a Magistrate, be liable to a fine not exceeding five hundred rupees, or to imprisonment of either description for a term which may extend to six months.

Proclamation to be made of the time of sale, and of the property to be sold.

22. The public officer empowered by the Chief Commissioner, under section six, to sell distrained property, shall cause to be affixed to the outer door of the defaulter's house, or on the premises where the property may have been distrained, a list of the property to be sold, with a notice specifying the place where, and the day and hour at which, the distrained property will be sold, and shall cause proclamation of the intended sale to be made by affixing a copy in the village ambála or meeting-place, or by beat of drum, or by other customary mode in the village to which the lands on which the arrear has accrued may belong, and in such place or places as the Superintendent, or other officer empowered by the Superintendent in that behalf, may consider necessary to give due publicity to the sale.

No sale shall take place until after the expiration of a period of fifteen days from the date on which the notice may be published as above stated.

Sale how to be conducted.

23. At the appointed time, the property shall be put up in one or more lots as the said officer may consider advisable, and shall be disposed of to the highest bidder. Where the property is sold for more than the amount of the arrear, the overplus, after deducting expenses of process and interest, shall be paid to the defaulter.

Payment on the purchase of distrained property how to be made.

24. The property shall be paid for in ready money at the time of sale, or as soon after as the officer holding the sale shall appoint; and the purchaser shall not be permitted to carry away any part of the property until he has paid for the same in full.

Re-sale in case of default.

Where the purchaser fails in the payment of the purchase-money, the property shall be re-sold, and the defaulting purchaser shall be liable for any loss arising, as well as the expenses incurred, on the re-sale. Where the property on the second sale is sold for a higher price than at the first sale, the difference or increase shall be the property of him on whose account the said first sale was made.

Demand to be served prior to attachment of land.

25. Before the Superintendent, or other officer empowered by the Superintendent in that behalf, proceeds to attach the land of the defaulter, or buildings thereon, he shall cause a written demand to be served upon the defaulter specifying the amount due, the estate or land in respect of which it is claimed, the name of the party in arrear, the batta due to the person who shall serve the demand, and the time allowed for payment, which shall be fixed with reference to the distance from the land on which the arrear is due to the place at which the money is to be paid.

Mode of service.

Such demand shall be served by delivering a copy to the defaulter, or to some adult male member of his family at his usual place of abode, or to his authorized agent, or by affixing a copy thereof on some conspicuous part of his last known residence, or on some conspicuous part of the land about to be attached.

Consequence of defaulter neglecting to pay.

26. When the amount due has not been paid pursuant to the terms of the demand, and no arrangement for securing the same has been entered into to the satisfaction of the Superintendent, or other officer empowered by the Superintendent in that behalf, he shall proceed to recover the arrear by the attachment and sale of the defaulter's land in the following manner.

27. The attachment shall be effected by affixing a notice thereof to some conspicuous part of the land. The notice shall set forth that unless the arrear, with interest and expenses, be paid within the date therein mentioned, the land will be brought to sale in due course of law. The attachment shall be notified by public proclamation on the land and by publication of the notice in the official Gazette.

Mode of attachment.

28. It shall be lawful for the Superintendent, when attaching the land of a defaulter, or at any time during such attachment, to assume the management of the property attached. In such case he shall appoint an agent with a proper establishment of officers to manage the property, and shall give the agent a certificate of appointment with written instructions under his seal and signature, and the expenses of management shall be defrayed out of the income of the property: Provided always that where the property may be too inconsiderable to admit of its being charged with the salary of an agent, it shall be committed to the care of such Revenue-officer as the Superintendent may select, who shall be subject to all the provisions hereinafter contained in reference to agents.

Appointment of agents.

In certain cases Revenue-officer to take charge.

29. Notice of the assumption of management shall forthwith be served on the defaulter in the manner described in section twenty-five, and shall be notified by public proclamation on the land and by publication in the official Gazette.

Notice of assumption of management.

30. It shall be the duty of the agent, during the continuance of management under section twenty-eight, to collect the rents and profits due, or accruing due, upon the estate, according to the engagements subsisting between the defaulter and the parties holding under him, or according to established usage where no specific engagements exist.

Duties of agent.

The agent shall keep accounts of all his receipts and disbursements, and submit the same and pay over the balance to the Superintendent, or other officer empowered by the Superintendent in that behalf, monthly or whenever required; and the defaulter shall be at liberty to inspect the accounts at all reasonable times, and to take copies of the same at his own expense without fee.

31. It shall be lawful for the defaulter to proceed by prosecution or suit against the agent in respect of any criminal or illegal act done by him to the injury of the defaulter or his estate; and all tenants or other persons holding by subordinate title shall have the same remedies against him as they would have had against the defaulter if the act were done by the defaulter.

Liability of agent to suit or prosecution.

32. All engagements entered into between the landholder and his tenants, except such as are hereinafter mentioned, shall be binding upon the Superintendent during attachment; but all such engagements made collusively with a view to defeat or delay the effect of the attachment, and all leases of land at a rate lower than the usual rates of assessment, and not made *boná fide* for the purpose of erecting factories or buildings, or of bringing waste-land into cultivation, and all engagements made subsequently to attachment, shall be nul and void against the Superintendent if he shall so declare; subject, however, to the right of the parties to such agreement to bring a suit against the Superintendent in the ordinary tribunals to establish the same; and all charges or incumbrances upon such land shall be postponed to the payment of the public revenue.

Effect of existing agreements between landholder and tenants.

33. All payments on account of rent or profits actually due made before public notice of assumption of management, to or on behalf of any landholder by any person holding under him, shall be valid against the Superintendent; and all such payments made after public notice of such assumption, or made before they were actually due, shall be nul and void against the Superintendent, who shall be entitled to recover as arrears of rent the full amount from the parties by whom it was paid, leaving them to sue the defaulter in the ordinary courts of law.

Payments by tenants.

34. All sums received from the property attached, after paying the expenses of attachment and management, shall be carried to the credit of the defaulter in discharge of the arrears due, and interest thereon at the rate of six per cent, per annum; and as soon as all arrears, interest, costs of attachment and expense of management have been liquidated, the attachment shall be withdrawn, and a full account rendered of all receipts and disbursements during its continuance.

Mode of settlement on withdrawal of attachment.

35. Any person claiming an interest in land which has been or is about to be attached may obtain its release by paying the arrears, interest and costs incurred; and all such sums, if paid by a tenant, may be deducted from any rent then or afterwards due by him to the defaulter; and if paid by a *bonâ fide* mortgagee or other incumbrancer upon the estate, shall constitute a debt from the defaulter to him, and shall be a charge upon the land, but shall only take priority over other charges according to the date at which the payment was made.

Persons interested in land may release it from attachment.

36. In the sale of immovable property under this Regulation, the following rules shall be observed :—

Rules to be observed in sale of immovable property.

First.—The sale shall be by public auction to the highest bidder. The time and place of sale shall be fixed by the Superintendent, or other officer empowered by the Superintendent in that behalf. The time may be either previous to or after the expiration of the official year.

Public auction.

Second.—Previous to the sale, the Superintendent, or other officer empowered by the Superintendent in that behalf, shall issue a notice thereof in English and in Kanarese specifying the name of the defaulter, the position and extent of land and of the buildings thereon, the amount of revenue assessed on the land or upon its different sections, the proportion of the public revenue due during the remainder of the current official year, and the time, place and conditions of sale. This notice shall be fixed up one month at least before the sale in the Superintendent's Office and in the taluk cutcherry, in the nád cutcherry and on some conspicuous part of the land.

Notification one month before sale.

Third.—A sum of money equal to fifteen per cent of the price of the lands shall be deposited by the purchaser in the hands of the Superintendent, or other officer empowered by the Superintendent in that behalf, at the time of the purchase; and where the remainder of the purchase-money may not be paid within thirty days, the money so deposited shall be liable to forfeiture.

Deposit and payment of balance.

Fourth.—Where the purchaser refuses or omits to deposit the said sum of money, or to complete the payment of the remaining purchase-money, the property shall be re-sold at the expense and hazard of such purchaser, and the amount of all loss or expense which may attend such refusal or omission shall be recoverable from such purchaser in the same manner as arrears of public revenue. Where the lands on the second sale are sold for a higher price than at the first sale, the difference or increase shall be the property of him on whose account the said first sale was made.

Re-sale in default of payment.

Fifth.—All persons bidding at a sale may be required to state whether they are bidding on their own behalf or as agents, and in the latter case to deposit a written authority signed by their principals. If such requisition be not complied with, their bids may be rejected.

Agents to name their principals.

37. The defaulter, or any person acting on his behalf or claiming an interest in the land, may tender to the officer appointed to conduct the sale the full amount of the arrears of revenue with the interest thereon, and all charges which have been incurred in demanding the arrears, or in attaching or managing the estate or in taking the steps necessary for sale, and thereupon the sale shall be stayed: Provided that such tender must be made before sunset on the day previous to that appointed for the sale, and all sums so paid by any tenant, or *bonâ fide* mortgagee, or other incumbrancer, shall be deemed payments under section thirty-five.

Tender of arrears up to sunset on day previous to sale.

38. Lands purchased at a public sale shall be registered in the name of the actual purchaser, who shall receive a certificate of sale signed and sealed by the Superintendent, which shall be conclusive evidence of the fact of the purchase, and no proof of the Superintendent's seal or signature shall be necessary, unless the authority before whom it is produced has reason to doubt its genuineness.

Purchaser to be registered.

Effect of certificate.

39. When lands are purchased at public sale, the Superintendent, or other officer empowered by the Superintendent in that behalf, shall publish in the villages in which the land sold may be situated, in the cutcherry of the taluk and nád, in the head cutcherry of the district, and in the official Gazette, the name of the purchaser and the

Proclamation of sale.

date of purchase, together with a declaration of the lawful transfer to such purchaser of all the rights and property of the former landholder in the said lands.

Delivery of possession.

40. Where, notwithstanding such publication, any lawful purchaser of land is resisted and prevented from obtaining possession of his purchased land, any Court of competent jurisdiction, on application and production of certificate of sale provided for by section thirty-eight, shall cause the proper process to be issued for the purpose of putting such purchaser in possession in the same manner as if the purchased lands had been decreed to the purchaser by a decision of the Court.

Contracts with and payments to defaulter how far binding on purchaser.

41. All contracts entered into by the defaulter with his tenants, and all payments to him by them, shall be binding upon the purchaser to the same extent and under the same conditions as laid down in sections thirty-two and thirty-three of this Regulation.

Sale to be free of all incumbrances.

Disposal of surplus.

42. All lands brought to sale on account of arrears of revenue shall be sold free of all incumbrances, and if any balance shall remain after liquidating the arrears with interest, and the expenses of attachment and sale, and other costs due in respect of such arrears, it shall be paid over to the defaulter unless such payment be prohibited by the order of a Court of competent jurisdiction.

Arrears of rent due to defaulter from under-tenants on day of sale how to be recovered.

43. Arrears of rent which on the day of sale may be due to the defaulter from his under-tenants shall, in the event of the sale, be recoverable by him after the sale by any process, except distraint, which might have been used by him for that purpose before the said sale.

Sale of land.

44. The Superintendent, or other officer empowered by the Superintendent in that behalf, may sell the whole or any portion of the land of a defaulter in discharge of arrears of revenue: Provided that where the land on which the demand is due consists of a warg or farm which is readily divisible into one or more compact blocks, no larger section in the land shall be sold than may be sufficient to discharge the arrears with interest, and expenses of attachment, management and sale.

Sale may be postponed on tender of security.

45. When a defaulter tenders security, the Superintendent, or other officer empowered by the Superintendent in that behalf, may accept it and postpone the sale of the defaulter's property upon such conditions and until such time as he may appoint; in the event of default being made in the performance of such conditions, the Superintendent or such officer may sell the property and proceed against the defaulter or against his security, or both.

Mode of enforcing payment by sureties.

46. All the remedies prescribed by this Regulation in case of revenue defaulters may be employed against their sureties, and the Superintendent, or other officer empowered by the Superintendent in that behalf, may enforce the same simultaneously with, or either previously or subsequently to, their enforcement against the principal; so, nevertheless, that no more than the total sum in arrears, and interest with costs and charges, shall be realized from both.

Similar process in case of other species of revenue, advances, fees and cesses.

47. All arrears of revenue, other than land-revenue, due to Government, all advances made by Government to owners and occupiers of land for the relief of distress or any purpose connected with agricultural objects but not specified in the Land Improvement Act, 1871, and all fees or other dues payable by any person to or on behalf of the village servants employed in revenue or police duties, and all cesses lawfully imposed upon land, may be recovered in the same manner as arrears of land-revenue under the provisions of this Regulation, unless the recovery thereof shall have been or may hereafter be otherwise specially provided for.

Process-servers to be paid batta.

48. Persons employed in serving notices or any other process under this Regulation shall be entitled to batta at such rates as may, from time to time, be fixed by the Chief Commissioner with the sanction of the Governor General in Council and published in the official Gazette.

49. The batta mentioned in the foregoing section, as well as interest and all costs and charges incurred under the authority of this Regulation, shall be recoverable from the defaulter and his sureties in the same manner as arrears of revenue.

Interest and charges recoverable as arrears.

50. Where property having been attached or distrained is ordered to be put up for sale and the sale is countermanded, the proprietor shall nevertheless be responsible for the expenses incurred in consequence of the attachment or distraint in the same manner as if the sale had taken place ; and in the event of such proprietor omitting to discharge the amount it shall be recoverable by the process under which the original demand would have been recoverable.

Expense of countermanded sales to be sustained by defaulter: and recovered as an arrear.

51. Every person making a payment of revenue shall be entitled to a receipt for the same, signed by the Superintendent, or other officer empowered by the Superintendent in that behalf;

Receipts of payment of revenue.

Such receipt shall state the name of the person making the payment and the subject-matter in respect of which it is paid, and, in case of land-revenue, shall describe the land on which the assessment is due, and the names of the persons entered in respect thereof in the settlement account.

52. No Court of civil judicature shall take into consideration or decide any question as to rate of land revenue payable to Government, or as to the amount of assessment fixed or to be hereafter fixed by the Government.

Civil Court not to take cognizance of questions relating to rate of revenue.

53. Nothing contained in this Regulation shall be held to prevent parties deeming themselves aggrieved by any proceedings under this Regulation, except as hereinbefore provided, from applying to the Civil Courts for redress : Provided that Civil Courts shall not take cognizance of any suit other than a suit for compensation instituted by such parties for any such cause of action, unless such suit shall be instituted within six months from the time at which the cause of action arose.

Suits by persons aggrieved by proceedings under this Regulation.

Limitation of suits.

54. No suit brought against the officer holding at any time the office of Superintendent of Coorg by any person deeming himself aggrieved by anything done or purporting to be done under this Regulation shall abate by reason of the departure from his district of the officer against whom such suit shall have been brought ; but the suit may be continued against the successor of such Superintendent in all respects as though it had been instituted against himself. A suit may be brought against any Superintendent in his official capacity on account of anything done or purporting to have been done under this Regulation by his predecessor subject to the limitation prescribed in the preceding section : Provided that no Superintendent shall be personally liable for any official act of his predecessor.

Suits against Superintendent to survive against his successor, or to be originally maintainable against him.

No personal liability for acts of predecessor.

55. This Regulation shall take effect from the date of its publication in the official Gazette.

D. FITZPATRICK,
Secretary to the Govt. of India.

List of Papers placed at the disposal of the Press.

No.	No. of Letters.	Date.	Subject.
1	4417-28—1116.	14th September 1880.	Regarding the opening of new Anche lines in the Kadur District.
2	4970—97 ...	7th October do ...	Intimating that it is not the wish of the Chief Commissioner to interfere with the harmless performance of "Sidi".
3	4979—98 ...	8th do ...	Stating that the obligation of importers of arms and ammunition to give notice of the arrival of consignments is not invalidated because their attention is not drawn to it on the back of the license.
4	489—Police 15.	29th September 1880	Passing orders on the re-organization of the Rural Police.

THE

MYSORE GAZETTE.

No. 43 Published by Authority. of 1880.

BANGALORE, SATURDAY, OCTOBER 30, 1880.

☞ Separate paging is given to this Part in order that it may be filed as a separate compilation.

CONTENTS.

PAGE.

PART I.—Notifications by the Chief Commissioner of Mysore and Coorg.—Notifications by the Government of India... 321—334

PART II.—Notifications, &c., by the Judicial Commissioner; Survey and Settlement Commissioner; Superintendent of Inam Settlements; Deputy Accountant General; Public Works Officers; Military Assistant; Inspector General of Registration; Director of Public Instruction; Deputy Surgeon General of Hospitals; Anche Bakshi; President of the Bangalore Municipal Boards; District and Sessions Judges; Deputy Commissioners of Districts.—Season Reports; Meteorological Registers; Postal Notices, &c. ... ... 539—548

PART III.—Acts and Bills of the Governor Genl. of India in Council, &c.—Bill relating to Government Securities ... 83—85

PART IV.—Miscellaneous Papers ... ... Nil.

SUPPLEMENT.—Railway Rules ... ... 1—40

2ND DO Abstract of Season or Intermediate Reports, &c. 1—2

PART I.

Notifications by the Chief Commissioner of Mysore.

GENERAL DEPARTMENT.

NOTIFICATIONS.

The 26th October 1880.

No. 117.—S. Ramaswami Iyer, Acting Amildar and 3rd Class Magistrate, Gundlupet Taluk, is directed, under the proviso to Section 335 of the Criminal Procedure Code, to take down the evidence of complainants and witnesses with his own hand in the English language.

No. 118.—Mr. N. Venkat Rao, Attaché, delivered over, and Mr. E. Chitambram Iyer, Subordinate Judge, received, charge of the Túmkúr District Treasury in the afternoon, and of the Túmkúr Jail in the forenoon, of the 23rd October 1880.

No. 119.—Mr. S. Venkat Vardaiengar, M. L., B. A., delivered over, and Mr. G. F. Meiklejohn received, charge of the Kadur District and Treasury on the forenoon of the 20th October 1880.

By Order,

W. J. CUNINGHAM,
Secretary.

REVENUE DEPARTMENT.

NOTIFICATIONS.

The 7th October 1880.

No. 60.—It is hereby notified for public information that all the rights of the present jodidars in the undermentioned jodi villages which have been duly attached in satisfaction of the arrears of revenue due to Government (as shewn in the subjoined statement) by the said jodidars, will be sold by public auction at the places and on the dates mentioned in the annexed statement. The sale will commence at 11 A. M. on the dates specified and the villages will be knocked down to the highest bidder without reserve.

2. The purchaser will be required to deposit 25 per cent of the purchase money at the time of sale and where the remainder of the purchase money may not be paid within 15 days from the day of sale, the money so deposited shall be liable to forfeiture.

3. When such deposit shall not be made nor the remaining purchase money paid up, the lands shall be re-sold at the expense and risk of the first purchaser.

4. Persons bidding at the sale may be required to state whether they bid on their own account or as agents, and in the latter case to deposit a written authority signed by their principals, otherwise their bids may be rejected.

5. The sale shall be stayed, if the defaulter, or any other person acting on his behalf or claiming an interest in the land, tenders the full amount of the arrears of revenue with the interest and other charges, provided such tender be made before sunset on the day previous to that appointed for the sale.

6. The sale of the property will not become absolute until the sale has been confirmed by the Chief Commissioner.

7. Purchasers having completed the payment of the purchase money will, as soon as the sale has been confirmed by the Chief Commissioner, be placed in immediate possession, and the village will be registered in the name of the purchaser, and a certificate of sale signed and sealed by the Deputy Commissioner will be granted to him. It is to be distinctly understood that the Government are not responsible for errors of description and in estimated extent.

8. Provided parties deeming themselves aggrieved by the sale shall be at liberty to appeal to the Chief Commissioner within 30 days from the day of sale, and the purchase shall be conditional on the final order in such appeal.

138

District.	Taluk.	Hobli.	Village.	Names of Jodidars.	Boundaries of the Village.	Estimated Extent.	Estimated gross rental or Beriz.	Quit-Rent payable annually to Government.	Arrears of Government Revenue for which the Village is to be sold.				Date of Sale, &c.
									Years.	Amount.			
Kadur.	Chikmagalur.	Marle.	Shettigere.	Nanjundabhat and 44 others.	Bounded on the east by Koratakere boundary, on the south Kyatanahalli, on the west Bennur and on the north Hanike village.	A.1,028 G. 13.	1,667—12—0.	422—0—0.	1879—80.	523	4	3	10th November 1880, at the Taluk Office before the Amildar.
Do	Do	Malalur.	Badanike.	Nanjundabhat and 35 others.	Bounded on the east by Beranji river, on the west Terugane village limit, on the south Beranji river, on the north Kundur village limit.	A. 569 G.24.	865—14—8.	286—0—0.	1879—80.	227	3	5	10th November 1880 at the Taluk Office before the Amildar.

The 14th October 1880.

No. 61.—The Chief Commissioner has been pleased to sanction the reduction of the License fee on Pottery Kilns levied under the provisions of Section 185, Bangalore Municipal Regulations of 1871, from Rs. 5 to 4 per Kiln per annum.

The 19th October 1880.

No. 62.—It is hereby notified for public information that all the rights of the present jodidars in the undermentioned jodi village in the Chikmagalur Taluk of the Kadur District, which has been duly attached in satisfaction of the arrears of revenue due to Government (as shewn in the subjoined statement) by the said jodidars, will be sold by public auction at the place and on the date mentioned in the annexed statement. The sale will commence at 11 A. M. on the date specified and the village will be knocked down to the highest bidder without reserve.

2. The purchaser will be required to deposit 25 per cent of the purchase money at the time of sale and where the remainder of the purchase money may not be paid within 15 days from the day of sale the money so deposited shall be liable to forfeiture.

3. When such deposit shall not be paid, nor the remaining purchase money paid up, the lands shall be re-sold at the expense and risk of the first purchaser.

4. Persons bidding at a sale may be required to state whether they bid on their own account, or as agents, and in the latter case to deposit a written authority signed by the principals, otherwise their bids may be rejected.

5. The sale shall be stayed, if the defaulter, or any other person acting on his behalf or claiming an interest in the land, tenders the full amount of the arrears of revenue with interest and other charges, provided such tender be made before sunset on the day previous to that appointed for the sale.

6. The sale of the property will not become absolute, until the sale has been confirmed by the Chief Commissioner.

7. Purchasers having completed the payment of the purchase money will, as soon as the sale has been confirmed by the Chief Commissioner, be placed in immediate possession, and the village will be registered in the name of the purchaser and a certificate of sale signed and sealed by the Deputy Commissioner will be granted to him. It is to be distinctly understood that the Government are not responsible for errors of description and in estimated extent.

8. Provided parties deeming themselves aggrieved by the sale shall be at liberty to appeal to the Chief Commissioner within thirty days from the day of sale and the purchase shall be conditional on the final order in such appeal.

District.	Taluk.	Hobli.	Village.	Name of Jodidar.	Boundaries of the Village.	Estimated Extent.	Estimated Beriz.	Quit-Rent payable annually to Government.	Arrears of Revenue for which the Village is to be sold. Years.	Amount.			Date of Sale, &c.
Kadur.	Chikmagalur.	Karagodu.	Mallenahalli.	Subba Bhatt and 2 others.	Bounded on the north by Gollarahalli, south by Nadahalli, east by Honnenahalli, west by Kabbikere.	A. 734, G. 34.	Rs. 365—14—1.	„ 224—6—0.	1879—80...	101	11	1	16th November 1880, at Chikmagalur before the Revenue Assistant Commissioner.

The 20th October 1880.

SCHOOL OF ENGINEERING AND NATURAL SCIENCE.

No. 63.—In continuation of Notification No. 52 of the 16th instant, the following arrangements regarding instruction in Botany, Vegetable Physiology and Practical Gardening are notified :—

1. Lectures on the above subjects will be delivered at the Lal-Bagh, by Mr. Cameron, the Superintendent, in the following order, commencing at 7 A. M. each day, the first lecture to be delivered on Monday the 1st November 1880 :—

Botany	..	..	..	on Mondays.
Vegetable Physiology	..	..	..	on Thursdays.
Practical Gardening	..	..	..	on Saturdays.

2. The lectures are open to students and masters from Government and Aided schools on payment of rupee one a month in advance, and to the general public on payment of rupees two a month in advance. A register of candidates for admission will be kept at the Office of the Director of Public Instruction, and at the Lal-Bagh. For the convenience of the general public, tickets admitting to the lectures for three months will be available at the Lal-Bagh, and at the Book Depository adjoining the Main Guard.

3. The following is a syllabus of the proposed lectures :—

BOTANY.

I. Definitions and Descriptive Botany.—1. The plant in general. 2. The root. 3. The stock. 4. The stem. 5. The leaves. 6. Scales, bracts, and stipules. 7. Inflorescence and bracts. 8. The

flower in general. 9. The calyx and corolla or perianth. 10. The stamens. 11. The pistil. 12. The fruit. 13. The seed. 14. Accessory organs.

II. Classification or Systematic Botany.—1. The classes and sub-classes. 2. Divisions. 3. Natural orders or families. 4. Genera. 5. Species. 6. Varieties.

III. Economic Botany.—Plants yielding 1. Food. 2. Fibre. 3. Dyes. 4. Medicine. 5. Oils. 6. Timber. 7. Starch, &c. 8. Plants of scenic value.

IV. Geographical Botany.—1. Indigenous plants. 2. Foreign plants. 3. Acclimatization of plants.

Text Books.—Lindley's School Botany, Oliver's Indian Botany, Drury's Useful Plants of India, Von Mueller's Select Plants for Extra-Tropical Countries, Balfour's Botany.

VEGETABLE PHYSIOLOGY.

I. Structure and Growth of the Elementary Tissues.
II. Arrangement of the Elementary Tissues, or Structure of the Organs of Plants.
III. Growth of the Organs.
IV. Functions of the Organs.
V. Functions of Flowers.
VI. Influence of Temperature, Electricity and Light on Plants.

PRACTICAL GARDENING.

1. The quality of soils and manures. 2. The rotation of crops. 3. The season of cropping. 4. The propagation of plants. 5. The culture of fruit trees. 6. The culture of vegetables. 7. The culture of flowers, &c.

Text Books.—Lindley's School Botany, Balfour's Botany, Lindley's Theory and Practice of Gardening, Johnson's Science and Practice of Gardening.

By Order,

C. RANGACHARLU,
Revenue Secretary.

PUBLIC WORKS DEPARTMENT.

NOTIFICATION.

The 26th October 1880.

No. 31.—Mr. E. Gramatzki, Executive Engineer, Coorg Division, is granted two months' privilege leave with effect from the date he is relieved by Mr. F. Sharp, Assistant Engineer, who is appointed Officiating Executive Engineer, during the former officer's absence, subject to the confirmation of the Government of India.

By Order,

C. BOWEN, *Major*, R. E.,
Offg. Secretary, P. W. D.

Notifications by the Chief Commissioner of Coorg.

GENERAL.

NOTIFICATION.

The 16th October 1880.

No. 18.—The annual auction sale of sandalwood of about ninety tons more or less, the produce of Coorg, will be held on the 3rd December 1880 at the Fraserpet Sandal Koti.

Terms of sale.—Those notified in *Mysore Gazette* No. 48 of the 5th December 1874.

All sums should be paid up before the 3rd of March 1881, failing which the penalties will be enforced.

By Order,

W. J. CUNINGHAM,
Secretary.

Notifications, &c., by the Government of India.

LEGISLATIVE DEPARTMENT.

NOTIFICATION.

Simla, the 24th September 1880.

No. 15.—Whereas the Secretary of State for India has by Resolution in Council declared the provisions of the Statute 33 Vic., cap. 3, section 1, to be from and after the 1st October 1877 applicable to the territories forming the Chief Commissionership of Coorg;

And whereas the Chief Commissioner of Coorg has proposed to the Governor General in Council a draft of the following Regulation, together with the reasons for proposing the same;

And whereas the Governor General in Council has taken such draft and reasons into consideration, and has approved of such draft, and the same has received the Governor General's assent;

In pursuance of the direction contained in the said section, the said Regulation is now published in the *Gazette of India.*

REGULATION No. III OF 1880.

A Regulation to declare and amend the law relating to the collection of the Public Revenue in the Province of Coorg.

Preamble.

WHEREAS it is expedient to declare and amend the law relating to the collection of the public revenue in the Province of Coorg; It is hereby enacted as follows:—

Interpretation-clause. "Landholder."

1. The term "Landholder," as used in this Regulation, shall mean and include all holders of land under jamma, sagu or otherwise subject to the payment of revenue direct to Government.

"Public revenue."

"Public Revenue," due on land shall, for the purposes of this Regulation, be taken to include cesses or other dues payable to Government on account of water supplied for irrigation.

"Chief Commissioner" and "Superintendent."

"Chief Commissioner" and "Superintendent," as used in this Regulation, mean the Chief Commissioner of Coorg and the Superintendent of Coorg respectively.

Land, the security for the revenue.

2. The land, the buildings upon it and its products shall be regarded as the security for the public revenue.

Landholder when and to whom to pay his khist.

3. Every landholder shall pay to the Superintendent, or other officer empowered by him to receive it, the revenue due upon his land on or before the day on which it falls due, according to the khistbandi or other engagement; and where no particular day is fixed, then within the time when the payment falls due according to local usage; Provided that it shall be lawful for the Chief Commissioner, by notification published in the official Gazette, to alter and fix from time to time the amount of the several khists or instalments, and the dates at which they shall respectively become payable.

The whole or portion of a khist remaining unpaid shall be deemed to be an arrear of revenue.

4. When the whole or a portion of a khist is not so paid, the amount of the khist or of its unpaid portion shall be deemed to be an arrear of revenue.

Arrear of revenue how to be recovered.

5. Whenever revenue is in arrear, it shall be lawful for the Superintendent, or other officer empowered by the Superintendent in that behalf, to proceed to recover the arrear, together with interest and costs of process, by the sale of the defaulter's movable and immovable property, in manner hereinafter provided.

Chief Commissioner empowered to appoint officer to sell distrained property.

6. The Chief Commissioner may, from time to time, appoint such officer or officers as may be necessary to sell, subject to all the rules and provisions contained in this Regulation, property distrained for arrears of revenue. Such officer or officers shall be subject also to the control and superintendence of the Superintendent.

Arrears of revenue to bear interest.

7. Arrears of revenue shall bear interest at the rate of six per cent per annum; but the Superintendent may remit, for sufficient cause shewn, the interest due on the arrear or any part of it.

Rules for seizure and sale of movable property.

8. In the seizure and sale of movable property for arrears of revenue, the following rules shall be observed:—

Demand in writing.

First.—The Superintendent, or other officer empowered by the Superintendent in that behalf, shall furnish to the person employed to distrain the property of a defaulter a demand in writing, and signed with his name, specifying the name of the defaulter, the amount of the arrear for which the distress may be issued, and the date on which the arrear fell due. The person employed to distrain shall produce the writing which, if the arrear, together with the batta due to him under section forty-eight, be not at once paid, shall be his authority for making the distress; and on the day on which the property may be distrained, shall deliver a copy of such writing to the defaulter, endorsing thereon a list or inventory of the property distrained and the name of the place where it may be lodged or kept.

Defaulter to be served with a copy.

Writing to state that the distrained property will be sold.

Second.—The writing shall further set forth that the distrained property will be immediately brought to public sale, unless the amount, with interest, batta and all the expenses of the distress, be previously discharged.

Mode of service when defaulter is absent.

Third.—When a defaulter is absent, a copy of the writing, with the endorsement, shall be fixed or left at his usual place of residence, or on the premises where the property may have been distrained, before the expiration of the third day calculating from the day of the distress.

Consequence of defaulter neglecting to pay after notice.

9. When the amount due has not been paid pursuant to the terms of the demand, and no arrangement for securing the same has been entered into to the satisfaction of the Superintendent, or other officer empowered by the Superintendent in that behalf, the distrainer shall transmit an inventory of the property distrained to the nearest public officer empowered by the Chief Commissioner, under section six, to sell distrained property, in order that it may be publicly sold for the discharge of the arrear due, with interest, batta and cost of distraint.

On tender of arrear and expenses prior to day of sale, distress to be withdrawn.

10. Where a defaulter tenders payment of the arrear demanded after his property has been distrained, and prior to the day fixed for sale, together with payment of interest, batta and all necessary expenses attending distress, the distrainer shall receive the amount immediately upon the same being tendered, and shall forthwith release the property.

11. The distrainer attaching the crops or ungathered products of the land belonging to a defaulter may cause them to be sold when fit for reaping or gathering, or at his option may cause them to be reaped or gathered in due season, and stored in proper places until sold. In the latter case, the expense of reaping or gathering and storing such crops or products shall be defrayed by the owner upon his redeeming the property, or from the proceeds of the sale in the event of its being sold.

Distrained crops how to be dealt with.

When crops or products belonging to a tenant have been sold, it shall be lawful for such tenant to deduct the value of the crops or products so sold from any rent which may be due by him, then or afterwards, to the defaulter, in respect of the land on which such crops or products have been grown. It shall also be lawful for a tenant whose crops are attached for an arrear of revenue to pay the arrear and deduct the amount in the aforesaid manner from any rent due by him, then or afterwards.

Tenant may pay arrears and terminate attachment.

12. The distrainer shall not work the bullocks or cattle, or make use of the goods or effects distrained; he shall provide the necessary food for the cattle or live-stock, the expense attending which shall be defrayed by the owner upon his redeeming the property or from the proceeds of the sale in the event of its being sold.

Distrained cattle or goods not to be used.

13. Where property distrained is stolen or lost or damaged by reason of the necessary precautions for its due preservation not having been taken, or from its having been improperly worked or made use of, the amount of such loss or damage shall be recoverable by summary process by the Superintendent from the officer whose neglect or act occasioned the loss or damage, and the amount when recovered, shall be paid to the person damnified.

Officer responsible on neglect in respect of distrained property.

14. The distress levied shall not be excessive, that is to say, the property distrained shall be as nearly as possible proportionate to the amount of the arrears; and such cattle and agricultural implements as may be required by the defaulter for the purpose of cultivation shall be exempt from attachment.

Distress to be proportionate to the arrear.

15. Distress shall be made after sunrise and before sunset, and not otherwise.

Time of distress.

16. Where a defaulter makes a fraudulent conveyance of property to prevent the distress for arrears, any Civil Court of competent jurisdiction, upon proof thereof, shall summarily cause the property to be delivered up to the distrainer. The defaulter shall further be liable to the penalties prescribed by section 424 of the Indian Penal Code.

Penalty for fraudulent conveyance of property to prevent distress.

17. Where any person, not being a defaulter or responsible for a defaulter, claims a right to the property distrained, and the distrainer may notwithstanding cause the same to be sold, such claimant, on proof of such right in any Civil Court of competent jurisdiction, and in the event of the distrainer being unable to prove the responsibility for the arrear of revenue on account of which the property may have been sold, shall recover from the distrainer the full value of such property, with interest, costs and damages, according to the circumstances of the case. But claims to crops upon the ground, or to gathered products of the ground, attached in the possession of the defaulter, whether founded upon a previous sale, mortgage or otherwise, shall not bar the prior claim of revenue due from the ground upon which such crop or product may have been grown.

Claims to property distrained and sold.

Revenue to be the first charge.

18. Where it is proved to the satisfaction of any Civil Court of competent jurisdiction that any person has forcibly or clandestinely taken away property once distrained, the Court may summarily cause such property to be restored to the distrainer. The offender shall further be liable to the penalties prescribed by the Indian Penal Code.

Penalty for forcibly or clandestinely taking away distrained property.

19. It shall be lawful for the distrainer to force open any stable, cow-house, granary, godown, out-house or other building, and he may also enter any dwelling house, the outer door of which may be open, and may break open the door of any room in such dwelling-house, for the purpose of attaching property belonging to a defaulter and lodged therein: Provided always that it shall not be lawful for such distrainer to break open or enter any apartment in such dwelling-house appropriated for the zanana or residence of women, except as hereinafter provided.

What places distrainer may force open.

Powers of distrainer to force open doors in the presence of a Police officer.

20. Where a distrainer has reason to suppose that the property of a defaulter is lodged within a dwelling-house the outer door of which is shut, or within any apartments appropriated to women which by the usage of the country, are considered private, such distrainer shall represent the same to the officer in charge of the nearest Police-station. On such representation, the officer in charge of the said station shall send a Police officer to the spot, in presence of whom the distrainer may force open the outer door of such dwelling-house, in like manner as he may break open the door of any room within the house except the zanana. The distrainer may also, in the presence of the Police officer, after due notice given for the removal of women within a zanana, and after furnishing means for their removal in a suitable manner (if they be women of rank who according to the customs of the country cannot appear in public), enter the zanana-apartments for the purpose of distraining the defaulter's property deposited therein; but such property, if found, shall be immediately removed from such apartments, after which they shall be left free to the former occupants.

Punishment for unlawful entry.

21. Persons entering the apartments of women or forcing open the outer door of dwelling-houses contrary to the provisions of this Regulation shall, on conviction before a Magistrate, be liable to a fine not exceeding five hundred rupees, or to imprisonment of either description for a term which may extend to six months.

Proclamation to be made of the time of sale, and of the property to be sold.

22. The public officer empowered by the Chief Commissioner, under section six, to sell distrained property, shall cause to be affixed to the outer door of the defaulter's house, or on the premises where the property may have been distrained, a list of the property to be sold, with a notice specifying the place where, and the day and hour at which, the distrained property will be sold, and shall cause proclamation of the intended sale to be made by affixing a copy in the village ambála or meeting-place, or by beat of drum, or by other customary mode in the village to which the lands on which the arrear has accrued may belong, and in such place or places as the Superintendent, or other officer empowered by the Superintendent in that behalf, may consider necessary to give due publicity to the sale.

No sale shall take place until after the expiration of a period of fifteen days from the date on which the notice may be published as above stated.

Sale how to be conducted.

23. At the appointed time, the property shall be put up in one or more lots as the said officer may consider advisable, and shall be disposed of to the highest bidder. Where the property is sold for more than the amount of the arrear, the overplus, after deducting expenses of process and interest, shall be paid to the defaulter.

Payment on the purchase of distrained property how to be made.

24. The property shall be paid for in ready money at the time of sale, or as soon after as the officer holding the sale shall appoint; and the purchaser shall not be permitted to carry away any part of the property until he has paid for the same in full.

Re-sale in case of default.

Where the purchaser fails in the payment of the purchase-money, the property shall be re-sold, and the defaulting purchaser shall be liable for any loss arising, as well as the expenses incurred, on the re-sale. Where the property on the second sale is sold for a higher price than at the first sale, the difference or increase shall be the property of him on whose account the said first sale was made.

Demand to be served prior to attachment of land.

25. Before the Superintendent, or other officer empowered by the Superintendent in that behalf, proceeds to attach the land of the defaulter, or buildings thereon, he shall cause a written demand to be served upon the defaulter specifying the amount due, the estate or land in respect of which it is claimed, the name of the party in arrear, the batta due to the person who shall serve the demand, and the time allowed for payment, which shall be fixed with reference to the distance from the land on which the arrear is due to the place at which the money is to be paid.

Mode of service.

Such demand shall be served by delivering a copy to the defaulter, or to some adult male member of his family at his usual place of abode, or to his authorized agent, or by affixing a copy thereof on some conspicuous part of his last known residence, or on some conspicuous part of the land about to be attached.

Consequence of defaulter neglecting to pay.

26. When the amount due has not been paid pursuant to the terms of the demand, and no arrangement for securing the same has been entered into to the satisfaction of the Superintendent, or other officer empowered by the Superintendent in that behalf, he shall proceed to recover the arrear by the attachment and sale of the defaulter's land in the following manner.

27. The attachment shall be effected by affixing a notice thereof to some conspicuous part of the land. The notice shall set forth that unless the arrear, with interest and expenses, be paid within the date therein mentioned, the land will be brought to sale in due course of law. The attachment shall be notified by public proclamation on the land and by publication of the notice in the official Gazette.

Mode of attachment.

28. It shall be lawful for the Superintendent, when attaching the land of a defaulter, or at any time during such attachment, to assume the management of the property attached. In such case he shall appoint an agent with a proper establishment of officers to manage the property, and shall give the agent a certificate of appointment with written instructions under his seal and signature, and the expenses of management shall be defrayed out of the income of the property. Provided always that where the property may be too inconsiderable to admit of its being charged with the salary of an agent, it shall be committed to the care of such Revenue-officer as the Superintendent may select, who shall be subject to all the provisions hereinafter contained in reference to agents.

Appointment of agents.

In certain cases Revenue-officer to take charge.

29. Notice of the assumption of management shall forthwith be served on the defaulter in the manner described in section twenty-five, and shall be notified by public proclamation for the land and by publication in the official Gazette.

Notice of assumption of management.

30. It shall be the duty of the agent, during the continuance of management under section twenty-eight, to collect the rents and profits due, or accruing due, upon the estate, according to the engagements subsisting between the defaulter and the parties holding under him, or according to established usage where no specific engagements exist.

Duties of agent.

The agent shall keep accounts of all his receipts and disbursements, and submit the same and pay over the balance to the Superintendent, or other officer empowered by the Superintendent in that behalf, monthly or whenever required; and the defaulter shall be at liberty to inspect the accounts at all reasonable times, and to take copies of the same at his own expense without fee.

31. It shall be lawful for the defaulter to proceed by prosecution or suit against the agent in respect of any criminal or illegal act done by him to the injury of the defaulter or his estate, and all tenants or other persons holding by subordinate title shall have the same remedies against him as they would have had against the defaulter if the act were done by the defaulter.

Liability of agent to suit or prosecution.

32. All engagements entered into between the landholder and his tenants, except such as are hereinafter mentioned, shall be binding upon the Superintendent during attachment; but all such engagements made collusively with view to defeat or delay the effect of the attachment, and all leases of land at a rate lower than the usual rates of assessment, and not made *bonâ fide* for the purpose of erecting factories or buildings, or of bringing waste land into cultivation, and all engagements made subsequently to attachment, shall be null and void against the Superintendent if he shall so declare; subject, however, to the right of the parties to such agreement to bring a suit against the Superintendent in the ordinary tribunals to establish the same; and all charges or incumbrances upon such land shall be postponed to the payment of the public revenue.

Effect of existing agreements between landholder and tenants.

33. All payments on account of rent or profits actually due made before public notice of assumption of management, to or on behalf of any landholder by any person holding under him, shall be valid against the Superintendent; and all such payments made after public notice of such assumption, but made before they were actually due, shall be nul and void against the Superintendent, who shall be entitled to recover as arrears of rent the full amount from the parties by whom it was paid, leaving them to sue the defaulter in the ordinary courts of law.

Payments by tenants.

34. All sums received from the property attached, after paying the expenses of attachment and management, shall be carried to the credit of the defaulter in discharge of the arrears due, and interest thereon at the rate of six per cent. per annum; and as soon as all arrears, interest, costs of attachment and expense of management have been liquidated, the attachment shall be withdrawn, and a full account rendered of all receipts and disbursements during its continuance.

Mode of settlement on withdrawal of attachment.

Persons interested in land may release it from attachment.

35. Any person claiming an interest in land which has been or is about to be attached may obtain its release by paying the arrears, interest and costs incurred; and all such sums, if paid by a tenant, may be deducted from any rent then or afterwards due by him to the defaulter; and if paid by a *bona fide* mortgagee or other incumbrancer upon the estate, shall constitute a debt from the defaulter to him, and shall be a charge upon the land, but shall only take priority over other charges according to the date at which the payment was made.

Rules to be observed in sale of immovable property.

36. In the sale of immovable property under this Regulation, the following rules shall be observed.

Public auction.

First.—The sale shall be by public auction to the highest bidder. The time and place of sale shall be fixed by the Superintendent, or other officer empowered by the Superintendent in that behalf. The time may be either previous to or after the expiration of the official year.

Notification one month before sale.

Second.—Previous to the sale, the Superintendent, or other officer empowered by the Superintendent in that behalf, shall issue a notice thereof in English and in Kanarese specifying the name of the defaulter, the position and extent of land and of the buildings thereon, the amount of revenue assessed on the land or upon its different sections, the proportion of the public revenue due during the remainder of the current official year, and the time, place and conditions of sale. This notice shall be fixed up one month at least before the sale in the Superintendent's Office and in the taluk cutcherry, in the nad cutcherry and on some conspicuous part of the land.

Deposit and payment of balance.

Third.—A sum of money equal to fifteen per cent of the price of the lands shall be deposited by the purchaser in the hands of the Superintendent, or other officer empowered by the Superintendent in that behalf, at the time of the purchase; and where the remainder of the purchase-money may not be paid within thirty days, the money so deposited shall be liable to forfeiture.

Re-sale in default of payment.

Fourth.—Where the purchaser refuses or omits to deposit the said sum of money, or to complete the payment of the remaining purchase-money, the property shall be re-sold at the expense and hazard of such purchaser, and the amount of all loss or expense which may attend such refusal or omission shall be recoverable from such purchaser in the same manner as arrears of public revenue. Where the lands on the second sale are sold for a higher price than at the first sale, the difference or increase shall be the property of him on whose account the said first sale was made.

Agents to name their principals.

Fifth.—All persons bidding at a sale may be required to state whether they are bidding on their own behalf or as agents, and in the latter case to deposit a written authority signed by their principals. If such requisition be not complied with, their bids may be rejected.

Tender of arrears up to sunset on day previous to sale.

37. The defaulter, or any person acting on his behalf or claiming an interest in the land, may tender to the officer appointed to conduct the sale the full amount of the arrears of revenue with the interest thereon, and all charges which have been incurred in demanding the arrears, or in attaching or managing the estate or in taking the steps necessary for sale, and thereupon the sale shall be stayed: Provided that such tender must be made before sunset on the day previous to that appointed for the sale, and all sums so paid by any tenant, or *bona fide* mortgagee, or other incumbrancer, shall be deemed payments under section thirty-five.

Purchaser to be registered.

38. Lands purchased at a public sale shall be registered in the name of the actual purchaser, who shall receive a certificate of sale signed and sealed by the Superintendent, which shall be conclusive evidence of the fact of the purchase, and no proof of the Superintendent's seal or signature shall be necessary, unless the authority before whom it is produced has reason to doubt its genuineness.

Effect of certificate.

Proclamation of sale.

39. When lands are purchased at public sale, the Superintendent, or other officer empowered by the Superintendent in that behalf, shall publish in the villages in which the land sold may be situated, in the cutcherry of the taluk and nad, in the head cutcherry of the district, and in the official Gazette, the name of the purchaser and the

147

date of purchase, together with a declaration of the lawful transfer to such purchaser of all the rights and property of the former landholder in the said lands.

Delivery of possession.

40. Where, notwithstanding such publication, any lawful purchaser of land is resisted and prevented from obtaining possession of his purchased land, any Court of competent jurisdiction, on application and production of certificate of sale provided for by section thirty-eight, shall cause the proper process to be issued for the purpose of putting such purchaser in possession in the same manner as if the purchased lands had been decreed to the purchaser by a decision of the Court.

Contracts with and payments to defaulter how far binding on purchaser.

41. All contracts entered into by the defaulter with his tenants, and all payments to him by them, shall be binding upon the purchaser to the same extent and under the same conditions as laid down in sections thirty-two and thirty-three of this Regulation.

Sale to be free of all incumbrances.

Disposal of surplus.

42. All lands brought to sale on account of arrears of revenue shall be sold free of all incumbrances, and if any balance shall remain after liquidating the arrears with interest, and the expenses of attachment and sale, and other costs due in respect of such arrears, it shall be paid over to the defaulter unless such payment be prohibited by the order of a Court of competent jurisdiction.

Arrears of rent due to defaulter from under-tenants on day of sale how to be recovered.

43. Arrears of rent which on the day of sale may be due to the defaulter from his under-tenants shall, in the event of the sale, be recoverable by him after the sale by any process, except distraint, which might have been used by him for that purpose before the said sale.

Sale of land.

44. The Superintendent, or other officer empowered by the Superintendent in that behalf, may sell the whole or any portion of the land of a defaulter in discharge of arrears of revenue: Provided that where the land on which the demand is due consists of a warg or farm which is readily divisible into one or more compact blocks, no larger section in the land shall be sold than may be sufficient to discharge the arrears with interest, and expenses of attachment, management and sale.

Sale may be postponed on tender of security.

45. When a defaulter tenders security, the Superintendent, or other officer empowered by the Superintendent in that behalf, may accept it and postpone the sale of the defaulter's property upon such conditions and until such time as he may appoint; in the event of default being made in the performance of such conditions, the Superintendent or such officer may sell the property and proceed against the defaulter or against his security, or both.

Mode of enforcing payment by sureties.

46. All the remedies prescribed by this Regulation in case of revenue defaulters may be employed against their sureties, and the Superintendent, or other officer empowered by the Superintendent in that behalf, may enforce the same simultaneously with, or either previously or subsequently to, their enforcement against the principal; so, nevertheless, that no more than the total sum in arrears, and interest with costs and charges, shall be realized from both.

Similar process in case of other species of revenue, advances, fees and cesses.

47. All arrears of revenue, other than land-revenue, due to Government, all advances made by Government to owners and occupiers of land for the relief of distress or any purpose connected with agricultural objects but not specified in the Land Improvement Act, 1871, and all fees or other dues payable by any person to or on behalf of the village servants employed in revenue or police duties, and all cesses lawfully imposed upon land, may be recovered in the same manner as arrears of land-revenue under the provisions of this Regulation, unless the recovery thereof shall have been or may hereafter be otherwise specially provided for.

Process-servers to be paid batta.

48. Persons employed in serving notices or any other process under this Regulation shall be entitled to batta at such rates as may, from time to time, be fixed by the Chief Commissioner with the sanction of the Governor General in Council and published in the official Gazette.

148

49. The batta, mentioned in the foregoing section, as well as interest and all costs and charges incurred under the authority of this Regulation, shall be recoverable from the defaulter and his sureties in the same manner as arrears of revenue.

Interest and charges recoverable as arrears.

50. Where property having been attached or distrained is ordered to be put up for sale and the sale is countermanded, the proprietor shall nevertheless be responsible for the expenses incurred in consequence of the attachment or distraint in the same manner as if the sale had taken place ; and in the event of such proprietor omitting to discharge the amount it shall be recoverable by the process under which the original demand would have been recoverable.

Expense of countermanded sales to be sustained by defaulter: and recovered as an arrear.

51. Every person making a payment of revenue shall be entitled to a receipt for the same, signed by the Superintendent, or other officer empowered by the Superintendent in that behalf ;

Receipts of payment of revenue.

Such receipt shall state the name of the person making the payment and the subject-matter in respect of which it is paid, and, in case of land-revenue, shall describe the land on which the assessment is due, and the names of the persons entered in respect thereof in the settlement account.

52. No Court of civil judicature shall take into consideration or decide any question as to rate of land revenue payable to Government, or as to the amount of assessment fixed or to be hereafter fixed by the Government.

Civil Court not to take cognizance of questions relating to rate of revenue.

53. Nothing contained in this Regulation shall be held to prevent parties deeming themselves aggrieved by any proceedings under this Regulation, except as herein before provided, from applying to the Civil Courts for redress : Provided that Civil Courts shall not take cognizance of any suit other than a suit for compensation instituted by such parties for any such cause of action, unless such suit shall be instituted within six months from the time at which the cause of action arose.

Suits by persons aggrieved by proceedings under this Regulation. Limitation of suits.

54. No suit brought against the officer holding at any time the office of Superintendent of Coorg by any person deeming himself aggrieved by anything done or purporting to be done under this Regulation shall abate by reason of the departure from his district of the officer against whom such suit shall have been brought ; but the suit may be continued against the successor of such Superintendent in all respects as though it had been instituted against himself. A suit may be brought against any Superintendent in his official capacity on account of anything done or purporting to have been done under this Regulation by his predecessor subject to the limitation prescribed in the preceding section : Provided that no Superintendent shall be personally liable for any official act of his predecessor.

Suits against Superintendent to survive against his successor, or to be originally maintainable against him. No personal liability for acts of predecessor.

55. This Regulation shall take effect from the date of its publication in the official Gazette.

D. FITZPATRICK,
Secretary to the Govt. of India.

DEPARTMENT OF FINANCE AND COMMERCE.

NOTIFICATION.

Simla, the 16th October 1880.

No. 3288.—The following Rules are substituted for the Rules regarding Joining Time which were circulated in No. 90 and No. 144 G. Series of the Addenda and Corrigenda to the Codes of the Financial Department :—

RULES.

2. Only one day is allowed for joining an appointment which does not, necessarily, involve a change of residence.

[NOTE.—See Proviso VI to Rule 3.]

3. Otherwise, Joining Time is calculated as follows, excluding Sundays not actually spent in travelling :—

Six days for preparation ; and, in addition thereto,—

for the portion of the journey which the Officer travels, or might travel,—	a day for each—	
by Railway	200 miles.	
by Ocean Steamer	150 „	or any longer time actually occupied in the journey.
by River Steamer, ...	80 „	
by Mail Cart or other public stage conveyance drawn by horses	80 „	
in any other way	15 „	

[NOTE.—An extra day is allowed for any fraction of distance over that prescribed.]

Provisos—

i.—The maximum Joining Time is Thirty Days : the following provisos are all subject to this maximum.

[NOTE.—If the Local Government is satisfied that an Officer has, through no fault of his own, been unable to avail himself of the usual mode of travelling, it may extend even the Maximum Joining Time of Thirty Days. But in that case it should report its proceedings to the Government of India in the Department of Finance.]

ii.—When part of the journey is by steamer, the days intervening between the Officer being set free from his office, or, if he has no office, receiving his orders, and the departure of the steamer, or his start duly regulated to catch the steamer, shall be added to the time calculated under Rule 3.

iii.—By whatever route the Officer travels, his Joining Time shall, unless the Local Government specially permit otherwise, be calculated by the route which travellers habitually use.

iv.—If the Officer satisfies his new Departmental Superior that, notwithstanding due diligence on his part, the journey has occupied altogether more time than is allowed by the Rules, the time actually occupied may be allowed.

v.—On being satisfied that the Rules have, in any particular case, operated hardly, as for example, if an Officer has, through no default on his part, missed a steamer, or fallen sick on the journey, the Local Government may allow concessions in excess of what is admissible by the Rules, on such conditions as to allowances or otherwise as it may think fit. Such concessions must not be made as a mere indulgence or otherwise than because the Rules do not appear to provide reasonably and equitably for the case.

vi.—The Local Government may extend the Joining Time admissible by rule if it considers such extension necessary for the public convenience, or for the saving of public expense, as, for example, to prevent unnecessary and merely formal transfers.

[NOTE.—This Proviso applies also to Rule 2.]

vii.—The Accountant General, as defined in Section 84, Rule 2 of the Civil Pension Code, shall bring to the notice of the Local Government any concession made under Proviso iv which seems to him improper or unreasonable, and shall move the Local Government to report to the Government of India any concession made under Proviso v, or extension made under Proviso vi, which appears to him contrary to the spirit of those Provisos. The Local Government may not, in either case, finally overrule the Accountant General without a reference to the Governor General in Council.

[NOTE.—Upon the application of the Local Government the Government of India will sanction any necessary relaxation or modification of these Rules in exceptional localities, where their general application would operate harshly.]

4. The Joining Time of an Officer whose appointment is changed while he is in transit from one appointment to another, begins on the day following that on which he receives his orders.

R. B. CHAPMAN,
Secretary to the Govt. of India.

THE

MYSORE GAZETTE.

No. 44 Published by Authority. of 1880.

BANGALORE, SATURDAY, NOVEMBER 6, 1880.

☞ Separate paging is given to this Part in order that it may be filed as a separate compilation.

CONTENTS.

	PAGE.
PART I.—Notifications by the Chief Commissioner of Mysore and Coorg.—Notifications by the Government of India...	335—340
PART II.—Notifications, &c., by the Judicial Commissioner; Survey and Settlement Commissioner; Superintendent of Inam Settlements; Deputy Accountant General; Public Works Officers; Military Assistant; Inspector General of Registration; Director of Public Instruction; Deputy Surgeon General of Hospitals; Anche Bakshi; President of the Bangalore Municipal Boards; District and Sessions Judges; Deputy Commissioners of Districts.—Season Reports; Meteorological Registers; Postal Notices, &c.	549—560
PART III.—Acts and Bills of the Governor Genl. of India in Council, &c.—Bill relating to Government Securities ...	87—89
PART IV.—Miscellaneous Papers	Nil.
SUPPLEMENT.—Abstract of Season or Intermediate Reports, &c.	1—2

PART I.

Notifications by the Chief Commissioner of Mysore.

GENERAL DEPARTMENT.

NOTIFICATIONS.

The 2nd November 1880.

No. 120.—The following extract from the Proceedings of a District Court Martial for the trial of No. 639 Private Shek Murtaza of the 15th Madras Native Infantry is published in accordance with Article 158 of the Indian Articles of War (Act V of 1869.)

Extract from the Proceedings of a District Court Martial, held at Lundi Kotal on the 26th day of July 1880 by Br. Genl. W. A. Gib, Commanding 1st Section, Khyber Line Force, under the Indian Articles of War for the trial of all such prisoners as may be duly brought before it.

The Prisoner, No. 639 Private Shek Murtaza of the 15th Madras Native Infantry, was arraigned on the following Charges :—

Charges.

1*st Charge.*—Disgraceful conduct in having at Lundi Khana, Afghanistan, on or about the 13th day of March 1880, committed theft in respect of the following property of No. 734, Private Suraj Prasád of the 15th Madras Native Infantry, *viz.*, one watch value rupees four.

2nd Charge.—Disgraceful conduct in having at Lundi Kotal, on or about the 8th day of July 1880, dishonestly received the following property of No. 734 Private Suraj Prasád of the 15th Madras Native Infantry knowing or having reason to believe the same to be stolen, *viz.*, one watch value four rupees.

Finding.

The Court finds that No. 639 Private Shek Murtaza of the 15th Madras Native Infantry is guilty of the 1st charge but not guilty of the 2nd charge.

Sentence.

The Court sentence the prisoner No. 639 Private Shek Murtaza of the 15th Madras Native Infantry to be imprisoned with hard labor for one hundred and sixty-eight days.

Order by the confirming Officer.

Confirmed.—The prisoner having been convicted of disgraceful conduct, will, in accordance with the provisions of the 157th Article of War, be dismissed the service with ignominy and be made over with the prescribed warrant of commitment to the Officer in charge of the nearest jail for the purpose of undergoing the sentence awarded.

Roll of a sepoy of the 15th Madras Native Infantry who has been sentenced to imprisonment with hard labor for 168 days, Dakka, Afghanistan, 19th August 1880.

Company—"A." Rank, name and number.—639, Private Shek Murtaza, Crime—Theft. Sentence—Imprisonment with hard labor for 168 days. When and where tried—Lundi Kotal, 26th July 1880. Whether he can read or write—Yes, Urdu. Single, married or widower—Single. Former occupation or trade—None, son of a pensioned sepoy. Whether before convicted and how often—No. Character and behaviour—Very good. Age. Years—About 28 $\frac{6}{12}$, Height, Feet—5, Inches, 8½. Complexion—Dark-brown. Color of eyes—Black. Remarks—Place of residence, Bangalore, Madras Presidency.

The 4th November 1880.

No. 121.—The Chief Commissioner is pleased, under Section 49 of the Code of Criminal Procedure, to authorize Mr. V. N. Narsimmaiengar, District Magistrate of Shimoga, to empower any Magistrate subordinate to him to entertain complaints arising within certain local limits.

By Order,

W. J. CUNINGHAM,
Secretary.

REVENUE DEPARTMENT.

NOTIFICATIONS.

The 14th October 1880.

No. 61.—The Chief Commissioner has been pleased to sanction the reduction of the License fee on Pottery Kilns levied under the provisions of Section 185, Bangalore Municipal Regulations of 1871, from Rs. 5 to 4 per Kiln per annum.

The 19th October 1880.

No. 62.—It is hereby notified for public information that all the rights of the present jodidars in the undermentioned jodi village in the Chikmagalur Taluk of the Kadur District, which has been duly attached in satisfaction of the arrears of revenue due to Government (as shewn in the subjoined statement) by the said jodidars, will be sold by public auction at the place and on the date mentioned in the annexed statement. The sale will commence at 11 A. M. on the date specified and the village will be knocked down to the highest bidder without reserve.

2. The purchaser will be required to deposit 25 per cent of the purchase money at the time of sale and where the remainder of the purchase money may not be paid within 15 days from the day of sale the money so deposited shall be liable to forfeiture.

3. When such deposit shall not be paid, nor the remaining purchase money paid up, the lands shall be re-sold at the expense and risk of the first purchaser.

4. Persons bidding at a sale may be required to state whether they bid on their own account, or as agents, and in the latter case to deposit a written authority signed by the principals, otherwise their bids may be rejected.

5. The sale shall be stayed, if the defaulter, or any other person acting on his behalf or claiming an interest in the land, tenders the full amount of the arrears of revenue with interest and other charges, provided such tender be made before sunset on the day previous to that appointed for the sale.

6. The sale of the property will not become absolute, until the sale has been confirmed by the Chief Commissioner.

7. Purchasers having completed the payment of the purchase money will, as soon as the sale has been confirmed by the Chief Commissioner, be placed in immediate possession, and the village will be registered in the name of the purchaser and a certificate of sale signed and sealed by the Deputy Commissioner will be granted to him. It is to be distinctly understood that the Government are not responsible for errors of description and in estimated extent.

8. Provided parties deeming themselves aggrieved by the sale shall be at liberty to appeal to the Chief Commissioner within thirty days from the day of sale and the purchase shall be conditional on the final order in such appeal.

District.	Taluk.	Hobli.	Village.	Name of Jodidar.	Boundaries of the Village.	Estimated Extent.	Estimated Beriz.	Quit-Rent payable annually to Government.	Arrears of Revenue for which the Village is to be sold. Years.	Amount.			Date of Sale, &c.
Kadur.	Chikmagalur.	Karagodu.	Mallenahalli.	Subba Bhat and 2 others.	Bounded on the north by Gollarahalli, south by Nadahalli, east by Honnenahalli, west by Kabbikere.	A. 734, G. 34.	Rs. 365—14—1.	„ 224—6—0.	1879—80..	101	11	1	16th November 1880, at Chikmagalur before the Revenue Assistant Commissioner.

The 20th October 1880.

SCHOOL OF ENGINEERING AND NATURAL SCIENCE.

No. 63.—In continuation of Notification No. 52 of the 16th instant, the following arrangements regarding instruction in Botany, Vegetable Physiology and Practical Gardening are notified :—

1. Lectures on the above subjects will be delivered at the Lal-Bagh, by Mr. Cameron, the Superintendent, in the following order, commencing at 7 A. M. each day, the first lecture to be delivered on Monday the 1st November 1880 :—

Botany .. on Mondays.
Vegetable Physiology .. on Thursdays.
Practical Gardening .. on Saturdays.

2. The lectures are open to students and masters from Government and Aided schools on payment of rupee one a month in advance, and to the general public on payment of rupees two a month in advance. A register of candidates for admission will be kept at the Office of the Director of Public In-

struction, and at the Lal-Bagh. For the convenience of the general public, tickets admitting to the lectures for three months will be available at the Lal-Bagh, and at the Book Depository adjoining the Main Guard.

3. The following is a syllabus of the proposed lectures :—

BOTANY.

I. Definitions and Descriptive Botany.—1. The plant in general. 2. The root. 3. The stock. 4. The stem. 5. The leaves. 6. Scales, bracts, and stipules. 7. Inflorescence and bracts. 8. The flower in general. 9. The calyx and corolla or perianth. 10. The stamens. 11. The pistil. 12. The fruit. 13. The seed. 14. Accessory organs.

II. Classification or Systematic Botany.—1. The classes and sub-classes. 2. Divisions. 3. Natural orders or families. 4. Genera. 5. Species. 6. Varieties.

III. Economic Botany.—Plants yielding 1. Food. 2. Fibre. 3. Dyes. 4. Medicine. 5. Oils. 6. Timber. 7. Starch, &c. 8. Plants of scenic value.

IV. Geographical Botany.—1. Indigenous plants. 2. Foreign plants. 3. Acclimatization of plants.

Text Books.—Lindley's School Botany, Oliver's Indian Botany, Drury's Useful Plants of India, Von Mueller's Select Plants for Extra-Tropical Countries, Balfour's Botany.

VEGETABLE PHYSIOLOGY.

I. Structure and Growth of the Elementary Tissues.
II. Arrangement of the Elementary Tissues, or Structure of the Organs of Plants.
III. Growth of the Organs.
IV. Functions of the Organs.
V. Functions of Flowers.
VI. Influence of Temperature, Electricity and Light on Plants.

PRACTICAL GARDENING.

1. The quality of soils and manures. 2. The rotation of crops. 3. The season of cropping. 4. The propagation of plants. 5. The culture of fruit trees. 6. The culture of vegetables. 7. The culture of flowers, &c.

Text Books.—Lindley's School Botany, Balfour's Botany, Lindley's Theory and Practice of Gardening, Johnson's Science and Practice of Gardening.

The 30th October 1880.

No. 64.—The following extract from a letter, from the Government of India to the Government of Madras, 3004 of the 30th September 1880, communicated to the Chief Commissioner of Mysore and Coorg for information and guidance, is published for general information :—

* * * *

In reply to your letter No. 1029, dated the 26th ultimo, I am directed to forward copy of a letter to the Government of Bengal, No. 59, dated 14th May 1878, containing a previous decision of the Government of India, that condensed or concentrated beer should, as a material for the manufacture of beer, be admitted free of customs duty on importation into British India, but that as soon as it is rendered potable it should be brought under the operation of the Indian Excise Law. * *

* * * * *

The 4th November 1880.

No. 65.—The following transfers of Amildars are ordered :—

Gopalaiengar, Amildar of the Gundlupet Taluk, to be Amildar and 3rd Class Magistrate of the Nelamangala Taluk in the Bangalore District.—To join on the expiration of his leave.

K. Ramachandra Rao, appointed Amildar of the Nelamangala Taluk, to be Amildar and 3rd Class Magistrate of the Gundlupet Taluk, *vice*, Gopalaiengar.—To join on being relieved of his duties in Shimoga.

By Order,

C. RANGACHARLU,
Revenue Secretary.

PUBLIC WORKS DEPARTMENT.

NOTIFICATION.

The 30th October 1880.

No. 32.—Referring to para 2 of this Office Notification No. 56, dated 17th February 1880, Mr. E. H. Johns, Assistant Engineer, Mysore State Railway, is granted leave for 2 months and 4 days to study native languages under Public Works Code, Chapter II, Section I, para 27, from the 1st November 1880.

By Order,

A. LEMESSURIER, *Major, R. E.,*
Joint-Secretary, Railway Branch.

Notifications by the Chief Commissioner of Coorg.

GENERAL.

NOTIFICATION.

The 16th October 1880.

No. 18.—The annual auction sale of sandalwood of about ninety tons more or less, the produce of Coorg, will be held on the 3rd December 1880 at the Fraserpet Sandal Koti.

Terms of sale.—Those notified in *Mysore Gazette* No. 48 of the 5th December 1874.

All sums should be paid up before the 3rd of March 1881, failing which the penalties will be enforced.

By Order,

W. J. CUNINGHAM,
Secretary.

Notifications, &c., by the Government of India.

HOME, REVENUE AND AGRICULTURAL DEPARTMENT.

NOTIFICATION.

PUBLIC.

No. 1647.

Simla, the 28th October 1880.

THE Governor General in Council hereby declares that it is expedient that the Governor General shall visit certain parts of India unaccompanied by his Council. And in the exercise of the powers conferred by the Indian Councils Act, Section 6, the Governor General in Council hereby nominates the HON'BLE SIR JOHN STRACHEY, G. C. S. I., C. I. E., to be President of the said Council, with effect from this date, during the time of such visit; and the powers of the Governor General in assemblies of the said Council, during the time of such visit, shall be reposed in the said SIR JOHN STRACHEY, except that of assenting to, or withholding his assent from, or reserving for the signification of Her Majesty's pleasure, any law or regulation as provided in the said Act. And the Governor General is hereby authorized alone to exercise all or any of the powers which may be exercised by the said Governor General in Council in every case in which the said Governor General may think it expedient to exercise the same, except the powers of making laws and regulations.

By Order of the Governor General of India in Council,

C. GRANT,
Offg. Secy. to the Govt. of India.

FOREIGN DEPARTMENT.

NOTIFICATION.

Simla, the 29th October 1880.

No. 2099-*G.-G.*—Colonel C. A. Benson, Commanding Bangalore Rifle Volunteers, is appointed to officiate as Military Assistant to the Chief Commissioner of Mysore, in addition to his other duties, during the absence on furlough of Lieutenant-Colonel R. C. Stewart, or until further orders.

J. W. RIDGEWAY, *Capt.*,
Offg. Under-Secy. to the Govt. of India.

THE

MYSORE GAZETTE.

No. 45 Published by Authority. of 1880.

BANGALORE, SATURDAY, NOVEMBER 13, 1880.

☞ Separate paging is given to this Part in order that it may be filed as a separate compilation

CONTENTS.

PAGE.

PART I.—Notifications by the Chief Commissioner of Mysore and Coorg.—Notifications by the Government of India... 341—346

PART II.—Notifications, &c., by the Judicial Commissioner; Survey and Settlement Commissioner; Superintendent of Inam Settlements; Deputy Accountant General; Public Works Officers; Military Assistant; Inspector General of Registration; Director of Public Instruction; Deputy Surgeon General of Hospitals; Anche Bakshi; President of the Bangalore Municipal Boards; District and Sessions Judges; Deputy Commissioners of Districts.—Season Reports; Meteorological Registers; Postal Notices, &c. ... ... 561—572

PART III.—Acts and Bills of the Governor Genl. of India in Council, &c. Nil.

PART IV.—Miscellaneous Papers ... ... ,,

SUPPLEMENT.—Abstract of Season or Intermediate Reports, &c. 1—2

PART I.

Notifications by the Chief Commissioner of Mysore.

GENERAL DEPARTMENT.

NOTIFICATIONS.

The 11th November 1880.

No. 122.—The following extract from the General Register of officials of and above the rank of Shekdar, and above the rank of Peon, who have been dismissed and are disqualified from holding employment in any Department of the Mysore and Coorg Administrations, is published for general information :—

Department.	Name of Person.	Rank.	Amount of Pay.	Date of Dismissal.	Grounds of Dismissal.
Revenue Department, Coorg.	Ketchetti Somaiya.	Taluk Sheristadar.	R. 18	15th June 1880	Dismissed for having, whilst Sheristadar of the Mercara Taluk, misappropriated Rs. 276—8—0. He has been convicted and sentenced under Section 409 of the Indian Penal Code to 6 months' rigorous imprisonment and a fine of Rs. 350, in default to suffer 6 months' additional rigorous imprisonment.

The 12th November 1880.

No. 123.—Mr. R. Vijayendra Rao, Revenue Assistant Commissioner of the 1st Grade, is temporarily transferred to Bangalore for employment in the Revenue Department of the Chief Commissioner's Office on work in connection with the Census,—To join forthwith.

D. Appu Rao, Amildar of Chikmagalur Taluk, is appointed to act as Revenue Assistant Commissioner of the 4th Grade, in connection with the Census work in the Kadur District, with effect from the 1st November 1880.

Krishnaiengar, Amildar of the Chitaldroog Taluk, is appointed to act as Revenue Assistant Commissioner of the 4th Grade, in connection with the Census work in the Chitaldroog District, with effect from the 1st November 1880.

No. 124.—Mr. D. E. Hutchins, Assistant Conservator of Forests, Nundydroog Division, has passed the prescribed examination in Kanarese by the Higher Standard.

By Order,

W. J. CUNINGHAM,
Secretary.

REVENUE DEPARTMENT.

NOTIFICATION.

The 14th October 1880.

No. 61.—The Chief Commissioner has been pleased to sanction the reduction of the License fee on Pottery Kilns levied under the provisions of Section 185, Bangalore Municipal Regulations of 1871, from Rs. 5 to 4 per Kiln per annum.

The 19th October 1880.

No. 62.—It is hereby notified for public information that all the rights of the present jodidars in the undermentioned jodi village in the Chikmagalur Talúk of the Kadur District, which has been duly attached in satisfaction of the arrears of revenue due to Government (as shewn in the subjoined statement) by the said jodidars, will be sold by public auction at the place and on the date mentioned in the annexed statement. The sale will commence at 11 A. M. on the date specified and the village will be knocked down to the highest bidder without reserve.

2. The purchaser will be required to deposit 25 per cent of the purchase money at the time of sale and where the remainder of the purchase money may not be paid within 15 days from the day of sale the money so deposited shall be liable to forfeiture.

3. When such deposit shall not be paid, nor the remaining purchase money paid up, the lands shall be re-sold at the expense and risk of the first purchaser.

4. Persons bidding at a sale may be required to state whether they bid on their own account, or as agents, and in the latter case to deposit a written authority signed by the principals, otherwise their bids may be rejected.

5. The sale shall be stayed, if the defaulter, or any other person acting on his behalf or claiming an interest in the land, tenders the full amount of the arrears of revenue with interest and other charges, provided such tender be made before sunset on the day previous to that appointed for the sale.

6. The sale of the property will not become absolute, until the sale has been confirmed by the Chief Commissioner.

7. Purchasers having completed the payment of the purchase money will, as soon as the sale has been confirmed by the Chief Commissioner, be placed in immediate possession, and the village will be

registered in the name of the purchaser and a certificate of sale signed and sealed by the Deputy Commissioner will be granted to him. It is to be distinctly understood that the Government are not responsible for errors of description and in estimated extent.

8. Provided parties deeming themselves aggrieved by the sale shall be at liberty to appeal to the Chief Commissioner within thirty days from the day of sale and the purchase shall be conditional on the final order in such appeal.

District.	Taluk.	Hobli.	Village.	Name of Jodidar.	Boundaries of the Village.	Estimated Extent.	Estimated Beriz.	Quit-Rent payable annually to Government.	Arrears of Revenue for which the Village is to be sold. Years.	Amount.			Date of Sale, &c.
Kadur.	Chikmagalur.	Karagodu.	Mallenahalli.	Subba Bhat and 2 others.	Bounded on the north by Gollarahalli, south by Nadahalli, east by Honnenahalli, west by Kabbikere.	A. 734, G. 34.	Rs. 365—14—1.	224—6—0.	1879—80..	101	11	1	16th November 1880, at Chikmagalur before the Revenue Assistant Commissioner.

The 8th November 1880.

No. 66.—It is hereby notified for public information that all the rights of the present jodidars and kayamguttadars in the undermentioned jodi and kayamgutta villages which have been duly attached in satisfaction of the arrears of revenue due to Government (as shewn in the subjoined statement) by the said jodidars, and kayamguttadars, will be sold by public auction at the places and on the dates mentioned in the annexed statement. The sale will commence at 11 A. M. on the dates specified and the villages will be knocked down to the highest bidder without reserve.

2. The purchaser will be required to deposit 25 per cent of the purchase money at the time of sale and where the remainder of the purchase money may not be paid within 15 days from the day of sale, the money so deposited shall be liable to forfeiture.

3. When such deposit shall not be made, nor the remaining purchase money paid up, the lands shall be re-sold at the expense and risk of the first purchaser.

4. Persons bidding at the sale may be required to state whether they bid on their own account or as agents, and in the latter case to deposit a written authority signed by their principals, otherwise their bids may be rejected.

5. The sale shall be stayed, if the defaulter, or any other person acting on his behalf or claiming an interest in the land, tenders the full amount of the arrears of revenue with the interest and other charges, provided such tender be made before sunset on the day previous to that appointed for the sale.

6. The sale of the property will not become absolute until the sale has been confirmed by the Chief Commissioner.

7. Purchasers having completed the payment of the purchase money will, as soon as the sale has been confirmed by the Chief Commissioner, be placed in immediate possession, and the village will be registered in the name of the purchaser, and a certificate of sale signed and sealed by the Deputy Commissioner will be granted to him. It is to be distinctly understood that the Government are not responsible for errors of description and in estimated extent.

8. Provided parties deeming themselves aggrieved by the sale shall be at liberty to appeal to the Chief Commissioner within 30 days from the day of sale, and the purchase shall be conditional on the final order in such appeal.

District.	Taluk.	Hobli.	Village.	Name of Jodidar and Kayamguttadar.	Boundaries of the Village. On the East.	On the West.	On the North.
Bangalore.	Devanhalli.	Jala.	*Jodi Villages.*				
			Shanbhoganhalli ...	Seshagiri Rao and Annajappa ...	Chikkanahalli ...	Sitakempanahalli ...	Buddappanahalli ...
			Adaresahalli ...	Vollabha Shastri and others.	Chikkanahonahalli.	Marsandra ..	Kasavanahalli ...
			Margondahalli ...	Srinivasachari and others.	Bettanhalli and Sadenahalli.	Surudenapura ...	Bettenhalli ...
			Begur ...	Subbabhat and others	Bandikodigenahalli.	Muttugadahalli ...	Chikkanahalli ...
			Jagaleti ...	Suranaranappa and others.	Marenahalli ...	Kattiganhalli, Palanahalli ..	Bagaluru ...
			Channahalli Chokkahalli.	Bavachari and others.	Chikjala ...	Betta Alasur and Palya.	Tarabanahalli ...
			Navarattana Agrahara.	Sattiyachari and others.	Minahakunte and Chattigere.	Hegganahalli and Tarabanahalli.	Sadenhalli ...
			Dasnayakanahalli ...	Divakarappa ...	Chokkanahalli Marasandra, Hoskote Taluk	Marenhalli ...	Marulukunte ...
			Surudewapura ...	Gundabhat and others	Margondahalli ...	Kadatanamatte ...	Aradesahalli ...
			Papanahalli ...	Nanjundashastri and others.	Bairahalli ..	Tarahunise ...	Kudaregere ...
			Kayamgutta Villages.				
	Hoskote.	Jangamkote.	Arisinakunte ...	Venkatasubbaiya ...	Gangamatanahalli.	Mailenahalli ...	Ganne ...
			Angatatte ...	Mahadeva Rao ..	Kakachokkandahalli Pura, Nayamangala	Venkatenhalli, Chandenhalli, Vadigenhalli ..	Settihalli, Bhatrenahalli ...
		Nandagudi.	Gerahalli ...	Subbanna ...	Marsandra, Malur Taluk.	Tavarekere ...	Gangapura ...
	Doddaballapur.	Kakolu.	*Jodi Villages.*				
			Mavalipura ...	Venkappa and 4 others	Koramarakunte ..	Sikote ...	Mailappanahalli ...
		Tubugere.	Yadalahalli ...	Dasacharu and Kuppacharu,	Germudenahalli Banikupte, Goribidnur Taluk.	Sunkenhalli ...	Jodimuttanahalli, Goribidnur Taluk.
			Muttenagolhalli ...	Lakshmipati Shastri.	Perumallalli ..	Batchalli ...	Naikdalahalli ...
			Sembupura ...	Srikantabhat and another.	Kunchigunalu ...	Togurughatti ...	Sannaghatti, Timmanahalli ...
		Tippur.	Basavanapura ...	Venkatsubbaiya and others.	Akkiramanahalli ...	Mandesapura ..	Galabilakunte, Eyadrajaksandra.
		Kasaba Hobli.	Managondhalli ...	Srinivasamurti ..	Obadenahalli, Ragunatapura.	Nagarakere ...	Siddanayakanhalli.
Kolar.	Malur.	Lakkur.	Sonnur ...	Srinivasa Raghavachari and 2 others.	Channigarayapura...	Chaudadenhalli ...	Minasandra ...

On the South.	Estimated Extent.			Estimated gross Rental or Feriz.			Quit-rent payable annually to Government.			Arrears of Government Revenue for which village is to be sold. For Dhatu or 1876—77.			For Isvara or 1877—78.			For Bahudhanya or 1878—79.			For Pramadi or 1879—80.			Total.			Date of Sale, &c.
	K.	K.	P.	Rs.	A.	P.	Rs.	As	P.																
Dibbur ...	19	9	2	465	11	11	416	15	10	275	15	11	401	15	11	76	15	11	197	7	10	952	7	7	15th Dec. 1880 at the Devanhalli Taluk Cutcherry.
Suradenapura ...	82	3	8	640	15	3	665	1	0	111	13	8	...	...	...	548	0	6	294	13	0	954	11	2	
Sadenahalli ...	30	0	0	88	10	6	81	8	10	...	...	...	...	...	...	21	15	0	41	8	10	63	7	10	
Masigenahalli and Boyilahalli.	20	0	0	217	0	0	213	9	0	31	8	6	0	13	0	6	13	0	77	8	3	116	10	9	
Kannur ...	24	13	15	252	1	2	263	6	6	106	6	6	...	...	...	206	11	3	83	1	6	396	3	3	
Kattiganhalli ...	26	5	1	108	0	0	105	12	0	...	...	...	28	5	3	...	...	...	3	6	0	31	11	3	17th Dec. do.
Tarabanahalli ...	17	18	0	75	7	3	63	11	6	10	1	11	4	1	11	17	4	7	43	11	6	75	3	11	
Chikkanahalli ...	29	12	1½	56	0	0	55	5	4	53	4	8	53	4	8	53	4	8	55	5	4	215	3	4	
Sadenahalli ...	45	0	0	658	15	8	556	3	0	...	...	...	6	12	0	206	1	6	297	15	6	510	13	0	18th do
Betta Alsur ...	5	1	0	57	10	0	23	8	8	21	12	10	3	12	5	...	...	...	23	8	8	49	1	11	17th Dec. 1880, at the Taluk Cutcherry.
Mailenahalli ...	64	18	2	186	0	0	199	11	4	123	5	1	193	5	1	82	13	8	77	11	4	477	3	2	
Vadigenahalli ...	18	0	0	429	4	7	342	9	4	...	...	...	...	...	...	15	15	8	179	4	8	195	4	4	
Ramasandra ...	10	0	0	57	0	0	57	0	0	8	15	2	11	15	2	0	3	2	37	14	1	58	15	7	15th Dec. 1880, at the Taluk Cutcherry.
Byalakere ...	30	0	0	400	0	2	391	9	5	9	12	0	62	15	10	...	...	...	89	1	7	161	13	5	
Bannikuppe ...	15	0	0	25	9	7	25	10	9	...	...	...	...	...	...	...	...	...	7	9	9	7	9	9	
Tavasihalli, Tirumagondahalli.	11	0	0	17	12	2	19	2	0	14	9	3	18	9	3	18	9	3	19	2	0	70	13	9	
Kanchiganalu Agrahara	9	12	0	20	10	6	22	5	0	12	10	8	6	4	10	2	8	0	22	5	0	43	12	6	
Bhaktarahalli ...	10	12	7	39	4	4	25	8	0	12	9	7	12	9	6	12	6	0	25	8	0	63	1	1	
Arahalli Guddadahalli.	19	7	15	292	11	8	286	14	0	245	2	2	155	2	2	156	0	6	180	14	0	737	2	10	
Siddanahalli ..	25	0	0	250	0	0	115	0	0	121	1	9	1	1	9	121	1	9	21	0	9	264	6	0	16th do

The 10th November 1880.

No. 67.—The annual auction sales of sandalwood, the produce of Mysore, will be held on the dates and at the places mentioned below :—

Bangalore	8th December 1880.	..	150 Tons more or less.
Húnsúr	5th January 1881.	..	550 Do
Seringapatam	10th Do		
Shimoga	22nd Do	..	450 Do.
Sorab	5th Do	..	100 Do.
Ságar	8th Do	..	50 Do.
Anantapur	11th Do	..	50 Do.
Tirthahalli	17th Do	..	120 Do.
Honnali	24th Do	..	120 Do.

Terms of Sale.—Those notified in the *Mysore Gazette* No. 48 of the 5th December 1874. The term of credit allowed for payment of sums due for wood purchased at Sorab, Ságar, Anantapur, Tirthahalli and Honnali will however terminate on the 25th March 1881, by which date all sums must be paid up, failing which the penalties will be enforced.

The 11th November 1880.

No. 68.—Under instructions from the Government of India conveyed in letter No. 18—366 C. of the 1st November 1880, from the Officiating Under-Secretary, Home, Revenue and Agricultural Department, it is notified for general information that the 17th February 1881 has been fixed as the date for the final enumeration in the forthcoming Census.

By Order,

C. RANGACHARLU,
Revenue Secretary.

PUBLIC WORKS DEPARTMENT.

NOTIFICATION.

The 7th November 1880.

No. 33.—Mr. E. Gramatzki delivered over charge of the Coorg Division to Mr. F. Sharp on the afternoon of the 31st October 1880.

By Order,

C. BOWEN, *Major*, R. E.,
Offg. Secretary, P. W. D.

Notifications by the Chief Commissioner of Coorg.

GENERAL.

NOTIFICATION.

The 16th October 1880.

No. 18.—The annual auction sale of sandalwood of about ninety tons more or less, the produce of Coorg, will be held on the 3rd December 1880 at the Frasepet Sandal Koti.

Terms of sale.—Those notified in *Mysore Gazette* No. 48 of the 5th December 1874.

All sums should be paid up before the 3rd of March 1881, failing which the penalties will be enforced.

By Order,

W. J. CUNINGHAM,
Secretary.

THE

MYSORE GAZETTE.

No. 46 Published by Authority. of 1880.

BANGALORE, SATURDAY, NOVEMBER 20, 1880.

☞ Separate paging is given to this Part in order that it may be filed as a separate compilation.

CONTENTS.

	PAGE.
PART I.—Notifications by the Chief Commissioner of Mysore and Coorg.—Notifications by the Government of India...	347—349
PART II.—Notifications, &c., by the Judicial Commissioner; Survey and Settlement Commissioner; Superintendent of Inam Settlements; Deputy Accountant General; Public Works Officers; Military Assistant; Inspector General of Registration; Director of Public Instruction; Deputy Surgeon General of Hospitals; Anche Bakshi; President of the Bangalore Municipal Boards; District and Sessions Judges; Deputy Commissioners of Districts.—Season Reports; Meteorological Registers; Postal Notices, &c.	573—595
PART III.—Acts and Bills of the Governor Genl. of India in Council, &c.	Nil.
PART IV.—Miscellaneous Papers	"
SUPPLEMENT.—Abstract of Season or Intermediate Reports, &c.	1—3

PART I.

Notifications by the Chief Commissioner of Mysore.

GENERAL DEPARTMENT.

NOTIFICATIONS.

The 15th November 1880.

No. 125.—Under the authority contained in paragraph 10 of the Notification of the Government of India, Foreign Department, No. 235, I. J., dated 27th August 1879, the Chief Commissioner is pleased to authorize the District Judge of Nundydroog to transfer all applications that may hereafter be instituted before him by the inhabitants of the Bangalore, Kolar and Túmkúr Districts, for certificates under Act XXVII of 1860, (an Act for facilitating the collection of debts on succession and for the security of parties paying debts to the representatives of deceased persons), to the Subordinate Judges of Bangalore, Kolar and Túmkúr, respectively.

No. 126.—Under the provisions of Section 6 of the Indian Christian Marriage Act (XV of 1872), the Chief Commissioner hereby licenses the Revd. R. E. Carter of the Methodist Episcopal Church, Bangalore, to solemnize marriages within the Territories of the Mysore State.

The 17th November 1880.

No. 127.—It is hereby notified for general information that the designation of the office of Deputy Accountant General in Mysore is altered, in accordance with the Resolution of the Government of India, Department of Finance and Commerce, No. 3577, dated 4th November 1880, to "Comptroller."

The 15th November 1880.

No. 128.—Khader Mohadin, Munsiff of Kadur and 2nd Class Magistrate, is directed, under the proviso to Section 335 of the Code of Criminal Procedure, to take down the evidence of complainants and witnesses in his own hand in the English language.

No. 129.—Mr. K. Seshadri Iyer, B. A. & B. L, Deputy Commissioner, delivered over charge of the Túmkúr District to Mr. E. Chitambram Iyer, Subordinate Judge, on the afternoon of the 21st October 1880, and resumed charge of the District on the afternoon of the 8th instant.

The 16th November 1880.

No. 130.—Mr. D. E. Hutchins, Assistant Conservator of Forests, Nundydroog Division, officiating in the 1st Grade, is confirmed in that grade from the 2nd November 1880, the date of his passing the Higher Standard Examination in Kanarese, under the provisions of Para IV of Circular Resolution of the Government of India, Home, Revenue and Agricultural Department, No. 5 F., dated 23rd February 1880.

By Order,

W. J. CUNINGHAM,
Secretary.

REVENUE DEPARTMENT.

NOTIFICATIONS.

The 18th November 1880.

No. 69.—The Chief Commissioner directs that the following Notification regarding sandalwood sales in the Mysore Province be substituted for the Notification, dated 10th November 1880 :—

The annual auction sales of sandalwood, the produce of Mysore, will be held on the dates and at the places mentioned below :—

Bangalore	8th December 1880.	150	Tons more or less.
Shimoga	22nd Do	450	Do.
Húnsúr	5th January 1881.	550	Do.
Seringapatam	10th Do		
Sorab	5th Do	100	Do.
Ságar	8th Do	50	Do.
Anantapur	11th Do	50	Do.
Tirthahalli	17th Do	120	Do.
Honnali	24th Do	120	Do.

Terms of Sale.—Those notified in the *Mysore Gazette* No. 48 of the 5th December 1874. The term of credit allowed for payment of sums due for wood purchased at Húnsúr, Seringapatam, Sorab, Ságar, Anantapur, Tirthahalli and Honnali will however terminate on the 25th March 1881, by which date all sums must be paid up, failing which the penalties will be enforced.

The 16th November 1880.

No. 70.—Svetadraiengar, Amildar of the Devanhalli Taluk, is granted one month's leave on medical certificate in extension of the three months' leave sanctioned in Notification No. 27, dated 22nd June 1880.

164

The 19th November 1880.

No. 71.—N. Gopalaiengar, Amildar of the Nelamangala Taluk, is granted three months' leave on medical certificate in extension of that granted in Notification No. 57 of the 21st September 1880.

P. Sitaramaiya, Revenue Head Munshi of the Bangalore District Office, is appointed to act as 5th Grade Amildar and 3rd Class Magistrate of the Nelamangala Taluk during Gopalaiengar's absence on leave, or until further orders.

No. 72.—Ranganna, Amildar of the Nagamangala Taluk, is granted seven days' privilege leave from such date as he may avail himself of the same.

No. 73.—Ignatio Coelho, Head Munshi of the Revenue Assistant Commissioner's Office, Kadur District, is appointed to act as 5th Grade Amildar and 3rd Class Magistrate of the Chikmagalur Taluk during the absence of Mr. Appu Rao on other duty, or until further orders.

By Order,

C. RANGACHARLU,
Revenue Secretary.

PUBLIC WORKS DEPARTMENT.

NOTIFICATIONS.

The 8th November 1880.

No. 34.—Mr. T. Inman, Assistant Engineer, 2nd Grade, has passed the Colloquial Examination in Kanarese prescribed in Chapter II, Section 1, Para 20 of the Revised Public Works Code.

The 12th November 1880.

No. 35.—Mr. T. Inman, Assistant Engineer, having returned to duty on the 22nd October 1880, the unavailed portion of the privilege leave granted him in Public Works Department Notification No. 24, dated 17th September 1880, *viz.*, from 22nd to 31st October, is cancelled at his own request.

By Order,

C. BOWEN, *Major*, R. E.,
Offg. Secretary, P. W. D.

Notifications by the Chief Commissioner of Coorg.

GENERAL.

NOTIFICATION.

The 16th October 1880.

No. 18.—The annual auction sale of sandalwood of about ninety tons more or less, the produce of Coorg, will be held on the 3rd December 1880 at the Fraserpet Sandal Koti.

Terms of sale.—Those notified in *Mysore Gazette* No. 48 of the 5th December 1874.

All sums should be paid up before the 3rd of March 1881, failing which the penalties will be enforced.

By Order,

W. J. CUNINGHAM,
Secretary.

THE

MYSORE GAZETTE.

No. 47 Published by Authority. of 1880.

BANGALORE, SATURDAY, NOVEMBER 27, 1880.

☞ Separate paging is given to this Part in order that it may be filed as a separate compilation.

CONTENTS.

	PAGE.
PART I.—Notifications by the Chief Commissioner of Mysore and Coorg.—Notifications by the Government of India...	351—356
PART II.—Notifications, &c., by the Judicial Commissioner; Survey and Settlement Commissioner; Superintendent of Inam Settlements; Comptroller; Public Works Officers; Military Assistant; Inspector General of Registration; Director of Public Instruction; Deputy Surgeon General of Hospitals; Anche Bakshi; President of the Bangalore Municipal Boards; District and Sessions Judges; Deputy Commissioners of Districts.—Season Reports; Meteorological Registers; Postal Notices, &c.	597—622
PART III.—Acts and Bills of the Governor Genl. of India in Council, &c.	Nil.
PART IV.—Miscellaneous Papers	"
SUPPLEMENT.—Abstract of Season or Intermediate Reports, &c.	

PART I.

Notifications by the Chief Commissioner of Mysore.

GENERAL DEPARTMENT.

NOTIFICATION.

The 24th November 1880.

No. 131.—Mr. A. Coopoosawmy Modaliar, Revenue Assistant Commissioner, delivered over, and Mr. A. Rangasamaiengar, B. A. & B. L., Subordinate Judge, received, charge of the Kolar District Treasury on the 4th November 1880.

By Order,
W. J. CUNINGHAM,
Secretary.

REVENUE DEPARTMENT.

NOTIFICATIONS.

The 8th November 1880.

No. 66.—It is hereby notified for public information that all the rights of the present jodidars and kayamguttadars in the undermentioned jodi and kayamgutta villages which have been duly attached in satisfaction of the arrears of revenue due to Government (as shewn in the subjoined statement) by the said jodidars, and kayamguttadars, will be sold by public auction at the places and on the dates mentioned in the annexed statement. The sale will commence at 11 A. M. on the dates specified and the villages will be knocked down to the highest bidder without reserve.

2. The purchaser will be required to deposit 25 per cent of the purchase money at the time of sale and where the remainder of the purchase money may not be paid within 15 days from the day of sale, the money so deposited shall be liable to forfeiture.

3. When such deposit shall not be made, nor the remaining purchase money paid up, the lands shall be re-sold at the expense and risk of the first purchaser.

4. Persons bidding at the sale may be required to state whether they bid on their own account or as agents, and in the latter case to deposit a written authority signed by their principals, otherwise their bids may be rejected.

5. The sale shall be stayed, if the defaulter, or any other person acting on his behalf or claiming an interest in the land, tenders the full amount of the arrears of revenue with the interest and other charges, provided such tender be made before sunset on the day previous to that appointed for the sale.

6. The sale of the property will not become absolute until the sale has been confirmed by the Chief Commissioner.

7. Purchasers having completed the payment of the purchase money will, as soon as the sale has been tered in the name of the purchaser, and a certificate of sale signed and sealed by the Deputy Commissioner errors of description and in estimated extent.

8. Provided parties deeming themselves aggrieved by the sale shall be at liberty to appeal to the final order in such appeal.

District.	Taluk.	Hobli.	Village.	Name of Jodidar and Kayamguttadar.	Boundaries of the Village. On the East.	On the West.	On the North.
Bangalore.	Devanahalli.	Jala.	*Jodi Villages.*				
			Shanbhoganhalli ...	Seshagiri Rao and Annajappa ...	Chikkanahalli ...	Sitakempanahalli ...	Buddappanahalli ...
			Adaresahalli ...	Vollabha Shastri and others.	Chikkanahalli ...	Marsandra ..	Kasavanahalli ...
			Margondahalli ...	Srinivasachari and others.	Bettanhalli and Sadenahalli.	Surudenapura ...	Bettenhalli ...
			Begur ...	Subbabhat and others	Bandikodigenahalli.	Muttugadahalli ...	Chikkanahalli ...
			Jagaleti ...	Suranaranappa and others.	Marenahalli ...	Kattiganhalli, Palanahalli ...	Bagaluru ...
			Channahalli Chokkahalli.	Bavachari and others.	Chikjala ...	Betta Alasur and Palya.	Tarabanahalli ...
			Navarattana Agrahara.	Sattiyachari and others.	Minanakunte and Chattigere.	Hegganahalli and Tarabanahalli.	Sadenhalli ...
			Dasnayakanahalli ...	Divakarappa ...	Chokkanahalli Marasandra, Hosko-te Taluk	Marenhalli ...	Marulukunte ...
			Surudewapura ...	Gundabhat and others	Margondahalli ...	Kadatanamatte ...	Aradesahalli ...
			Papanahalli ...	Nanjundashastri and others.	Bairahalli ..	Tarahunise ..	Kudaregere ...
			Kayamgutta Villages.				
			Arisinakunte ...	Venkatasubbaiya ...	Gangamattanahalli.	Mailenahalli ...	Ganne ...
	Hoskote.	Jangamkote.	Angatatte ...	Mahadeva Rao ..	Kakachokkandahalli Pura, Nayamangala	Venkatenhalli, Chandenhalli, Vadigenhalli ...	Settihalli, Bhatrenahalli ...
		Nandagudi.	Gerahalli ...	Subbanna ...	Marsandra, Malur Taluk.	Tavarekere ...	Gangapura ...
			Jodi Villages.				
	Doddaballapur.	Kakolu.	Mavalipura ...	Venkappa and 4 others	Koramarakunte ...	Sikote ...	Mailappanahalli ...
		Tubugere.	Yadalahalli ...	Dasacharu and Kuppacharu,	Germudenahalli Banikuppe, Goribidnur Taluk.	Sunkenhalli ...	Jodimuttanahalli, Goribidnur Taluk.
			Muttenagolhalli ...	Lakshmipati Shastri.	Perumalhalli ...	Batchalli ...	Naikdalahalli ...
			Sembupura ...	Srikantabhat and another.	Kunchiganalu ...	Togurughatti ...	Sannaghatti, Timmanahalli ...
		Tippur.	Basavanapura ...	Venkatsubbaiya and others.	Akkiramandhalli ...	Mandesapura ..	Galabilakunte, Eyadrajaksandra.
		Kasaba Hobli.	Managondhalli ...	Srinivasamurti ..	Obadenahalli, Ragunatapura.	Nagarakere ...	Siddanayakanhalli.
Kolar.	Malur.	Lakkur.	Sonnur ...	Srinivasa Raghavachari and 2 others.	Channigarayapura...	Chaudadenhalli ...	Minasandra ...

confirmed by the Chief Commissioner, be placed in immediate possession, and the village will be regis-
will be granted to him. It is to be distinctly understood that the Government are not responsible for

Chief Commissioner within 30 days from the day of sale, and the purchase shall be conditional on the

On the South.	Estimated Extent.			Estimated gross Rental or Beriz.			Quit-rent payable annually to Government.			Arrears of Government Revenue for which village is to be sold. For Dhatu or 1876—77.			For 1877—78.			For Bahudhanya or 1878—79.			For Pramadi or 1879—80.			Total.			Date of Sale, &c.
	K.	K.	P.	Rs.	A.	P.	Rs.	As	P.																
Dibbur ...	19	9	2	465	11	11	416	15	10	275	15	11	401	15	11	76	15	11	197	7	10	952	7	7	15th Dec. 1880 at the Devanhalli Taluk Cutcherry.
Suradenapura ...	82	3	8	640	15	3	665	1	0	111	13	8	...	...	...	548	0	6	294	13	0	954	11	2	
Sadenahalli ...	30	0	0	88	10	6	81	8	10	...	...	...	...	...	...	21	15	0	41	8	10	63	7	10	
Masigenahalli and Boyilahalli.	20	0	0	217	0	0	213	9	0	31	8	6	0	13	0	6	13	0	77	8	3	116	10	9	
Kanmur ...	24	13	15	252	1	2	263	6	6	106	6	6	...	...	...	206	11	3	83	1	6	396	3	3	
Kattiganhalli ...	26	5	1	108	0	0	105	12	0	...	...	...	28	5	3	..	...	...	3	6	0	31	11	3	17th Dec. do.
Tarabanahalli ...	17	18	0	75	7	3	63	11	6	10	1	11	4	1	11	17	4	7	43	11	6	75	3	11	
Chikkanahalli ...	29	12	1½	56	0	0	55	5	4	53	4	8	53	4	8	53	4	8	55	5	4	215	3	4	
Sadenahalli ...	45	0	0	658	15	8	556	3	0	...	...	...	6	12	0	206	1	6	297	15	6	510	13	0	18th do
Betta Alsur ...	5	1	0	57	10	0	23	8	8	21	12	10	3	12	5	...	...	...	23	8	8	49	1	11	17th Dec. 1880, at the Taluk Cutcherry.
Mailenahalli ...	64	18	2	186	0	0	199	11	4	123	5	1	193	5	1	82	13	8	77	11	4	477	3	2	
Vadigenahalli ...	18	0	0	429	4	7	342	9	4	...	...	...	...	...	...	15	15	8	179	4	8	195	4	4	
Ramasandra ...	10	0	0	57	0	0	57	0	0	8	15	2	11	15	2	0	3	2	37	14	1	58	15	7	15th Dec. 1880, at the Taluk Cutcherry.
Byalakere ...	30	0	0	400	0	2	391	9	5	9	12	0	62	15	10	...	...	...	89	1	7	161	13	5	
Bannikuppe ...	15	0	0	25	9	7	25	10	9	...	...	...	...	...	...	...	...	...	7	9	9	7	9	9	
Tavasiballi, Tirumagondahalli.	11	0	0	17	12	2	19	2	0	14	9	3	18	9	3	18	9	3	19	2	0	70	13	9	
Kanchiganalu Agrahara	9	12	0	20	10	6	22	5	0	12	10	8	6	4	10	2	8	0	22	5	0	43	12	6	
Bhaktarahalli ...	10	12	7	39	4	4	25	8	0	12	9	7	12	9	6	12	6	0	25	8	0	63	1	1	
Arahalli Guddadahalli.	19	7	15	292	11	8	286	14	0	245	2	2	155	2	2	156	0	6	180	14	0	737	2	10	
Siddanahalli ..	25	0	0	250	0	0	115	0	0	121	1	9	1	1	9	121	1	9	21	0	9	264	6	0	16th do

The 18th November 1880.

No. 69.—The Chief Commissioner directs that the following Notification regarding sandalwood sales in the Mysore Province be substituted for the Notification, dated 10th November 1880 :—

The annual auction sales of sandalwood, the produce of Mysore, will be held on the dates and at the places mentioned below :—

Bangalore	8th December 1880.	..	150 Tons more or less.
Shimoga	22nd Do	..	450 Do.
Húnsúr	5th January 1881.	..	550 Do.
Seringapatam	10th Do	..	
Sorab	5th Do	..	100 Do.
Ságar	8th Do	..	50 Do.
Anantapur	11th Do	..	50 Do.
Tirthahalli	17th Do	..	120 Do.
Honnali	24th Do	..	120 Do.

Terms of Sale.—Those notified in the *Mysore Gazette* No. 48 of the 5th December 1874. The term of credit allowed for payment of sums due for wood purchased at Húnsúr, Seringapatam, Sorab, Ságar, Anantapur, Tirthahalli and Honnali will however terminate on the 25th March 1881, by which date all sums must be paid up, failing which the penalties will be enforced.

The 26th November 1880.

No. 74.—In continuation of Notification No. 52 of the 16th September last, the following arrangements for instruction in Medicine and Natural Science are announced :—

2. For collegiate instruction in medicine, scholarships will be granted tenable at the Grant Medical College, Bombay, or the Medical College at Madras. Four scholarships at Rs. 25 each per month will be at once thrown open from the Provincial Funds, and one more scholarship every year hereafter. The candidates for these scholarships should have passed at least the First-in-Arts examination, and should possess the necessary qualifications in regard to physical health, character, &c. The scholarship will be tenable for 5 years, the period required to complete the course prescribed, subject to periodical reports of good conduct and progress from the head of the Institution.

3. For training medical subordinates of the lower grade, the Chief Commissioner has resolved to establish a Local Medical School at Bangalore, the master appointed to which will also give instruction in Chemistry and Physiology, Human and Comparative, which are the most important subjects embraced in the University Natural Science course, both to the students of the Central College as well as to a limited number of outsiders desirous of availing themselves of the instruction.

4. The Local Medical School will provide a three years' course of instruction. Admission will be open only to students who have matriculated or have studied for a year in a matriculation Class, and the school fee will be fixed at Rs. 2 per month.

5. In connection with this school, eleven scholarships of Rs. 8 each per month will be at once provided out of the Local Funds, and a similar number will be thrown open to candidates every year hereafter, *viz.*, 2 in each of the larger Districts of Bangalore, Mysore and Shimoga, and one in each of the remaining 5 Districts. The scholarship students and any other poor students who may be considered deserving will be admitted free. The Deputy Commissioners should at once take steps to select and send out the scholarship students from their respective Districts, taking care to satisfy themselves in communication with the Local Medical authorities in regard to the aptitude of the candidates for the profession. It is desirable that the school should open not later than the 15th January 1881.

6. With regard to instruction in Chemistry and Physiology to general students both from the Central College and from outside, arrangements will be made for giving it in the Central College at Bangalore for 3 days in the week and for 2 hours a day during a portion of the year. The fee will be fixed at Rs. 2 per month, being reduced to one rupee in the case of masters and students of Government and Aided schools.

7. The Chief Commissioner is pleased to appoint Mr. D. A. Choksi, Licentiate of Medicine and Surgery of the Bombay Medical College, as Head Master of the Medical School, Bangalore, with effect from the 6th instant.

By Order,

C. RANGACHARLU,
Revenue Secretary.

Notifications by the Chief Commissioner of Coorg.

GENERAL.

NOTIFICATIONS.

The 16th October 1880.

No. 18.—The annual auction sale of sandalwood of about ninety tons more or less, the produce of Coorg, will be held on the 3rd December 1880 at the Fraserpet Sandal Koti.

Terms of sale.—Those notified in *Mysore Gazette* No. 48 of the 5th December 1874.

All sums should be paid up before the 3rd of March 1881, failing which the penalties will be enforced.

The 20th November 1880.

No. 20.—Under the provisions of Section 2 of Act XIV of 1880 "The Indian Census Act, 1880," the Chief Commissioner is pleased to extend all the provisions of the said Act to the Province of Coorg.

2. Under the provisions of Section 3 of the said Act, the Chief Commissioner is pleased to delegate to the Superintendent of Coorg the power to appoint any person by name or in virtue of his office to take, or aid in, or supervise the taking of the Census within the Province of Coorg.

3. And under Section 12 of the said Act, the Chief Commissioner is pleased to declare that prosecutions under the said Act, or for neglecting or refusing to do anything required by the said Act to be done, shall be instituted before the Magistrate of the District, or before a First Class Magistrate, and that no such prosecution shall be instituted except with the previous sanction of the Superintendent of Coorg.

No. 21.—Under the provisions of Clause (*C*) Section 6 of the Scheduled Districts Act, 1874, the Chief Commissioner of Coorg is pleased to direct that the jurisdiction of a High Court, under the Code of Criminal Procedure, save and except in reference to proceedings against European British subjects, shall be exercised by the Judicial Commissioner of Coorg.

The 23rd November 1880.

No. 22.—Mr. C. Subbaiya, Rai-Bahadur, 2nd Assistant Superintendent, delivered over, and Lieutenant-Colonel H. G. Thomson, Superintendent of Coorg, received, charge of the Coorg Treasury on the afternoon of the 15th November 1880, on account of the Hutri (harvest) holidays.

By Order,

W. J. CUNINGHAM,
Secretary.

Notifications, &c., by the Government of India.

HOME, REVENUE AND AGRICULTURAL DEPARTMENT.

NOTIFICATION.

PUBLIC.

No. 1723.

Simla, the 10th November 1880.

In Home Department Notification No. 992, dated the 14th June 1880, it was declared that licenses for the importation into British India of sulphur proved to the satisfaction of the Local Government or Administration concerned to be intended only for *bonâ fide* manufacturing purposes might be granted without payment of the fee of Rs. 10 prescribed by Rule 6 of the Rules issued by the Government of India under the Indian Arms Act, 1878. The Governor General in Council is now pleased to declare that a similar exemption shall apply to sulphur proved to the satisfaction of the Local Government or Administration concerned to be intended only for agricultural purposes.

C. GRANT,
Offg. Secy. to the Govt. of India.

PUBLIC WORKS DEPARTMENT.

NOTIFICATION.

Simla, the 11th November 1880.

No. 378.—Mr. A. Stoddard, Executive Engineer, 1st Grade, Mysore, at present on leave, is transferred to British Burmah.

ALEX. FRASER, *Major-Genl.*, R. E.,
Secy. to the Govt. of India.

List of Papers placed at the disposal of the Press.

No.	No. of Letters.	Date.	Subject.
1	5557—123 ...	12th November 1880.	Directing the issue of the 2nd edition of the 'Mysore Jail Manual' with certain alterations.
2	5603—125 ...	15th do ...	Instructions relative to the taking down of confessions.

THE

MYSORE GAZETTE.

No. 48 Published by Authority. of 1880.

BANGALORE, SATURDAY, DECEMBER 4, 1880.

☞ Separate paging is given to this Part in order that it may be filed as a separate compilation.

CONTENTS.

PAGE.

PART I.—Notifications by the Chief Commissioner of Mysore and Coorg.—Notifications by the Government of India... 357—364

PART II.—Notifications, &c., by the Judicial Commissioner; Survey and Settlement Commissioner; Superintendent of Inam Settlements; Comptroller; Public Works Officers; Military Assistant; Inspector General of Registration; Director of Public Instruction; Deputy Surgeon General of Hospitals; Anche Bakshi; President of the Bangalore Municipal Boards; District and Sessions Judges; Deputy Commissioners of Districts.—Season Reports; Meteorological Registers; Postal Notices, &c. ... ... 623—640

PART III.—Acts and Bills of the Governor Genl. of India in Council, &c. Census Act No. XIV of 1880 ... 91—93

PART IV.—Miscellaneous Papers.-Madras Agri-Horticultural Society 1—2

SUPPLEMENT.—Abstract of Season or Intermediate Reports, &c. 1—2

PART I.

Notifications by the Chief Commissioner of Mysore.

GENERAL DEPARTMENT.

NOTIFICATIONS.

The 26th November 1880.

No. 132.—The following rules relating to camp equipage, mileage and travelling allowance, are published for general information and will come into force on and after the 1st January 1881.

The new rates of mileage are applicable to all officers in the service. With the exception of officers of the Revenue Survey Department, the new travelling allowances are applicable to all officers serving the Mysore State except those Civil and Military Officers who are in the British Imperial Service and are lent to the Mysore State.

Camp Equipage.

Government tents being supplied for public purposes only, the officers named in the margin when on tour, inspection or jamabandi duty will be limited ordinarily to one or two tents as shewn in the margin, to be conveyed at the public expense, for the accommodation of their offices, with a bichoba for orderlies when necessary, provided that no public building is available for the purpose.

Revenue Commissioner. District Judge. Deputy Commissioner. Military Assistant and Chief or Superintending Engineer.	Two tents, 1 for the officer and the other for his establishment.
Director of Public Instruction. Executive Engineers. Assistant do Deputy and Assistant Conservator of Forests. Assistant Commissioner on Revenue or Police duty.	One single pole tent.
Apothecaries when accompanying a Deputy Commissioner's camp.	A small dispensary tent.

2. In all cases, bills for carriage of Government tents must be supported by a certificate by the officer stating that the tents have been used solely for public purposes and with the memo at present in use shewing the number of officials in camp when a second tent is charged for. When a tent is used either wholly or in part for private accommodation, the carriage must be paid for by the officer himself.

Travelling Allowances.

3. Travelling allowance will be admissible only for journeys beyond a radius of 5 miles from the officers' Head-quarters, provided his halt is reasonable and his presence necessary in camp within the discretion of the superintending officer. The rule which restricts an officer to either daily allowance or mileage for one and the same journey or during the entire period of his absence from Head-quarters on the same occasion, is abolished. Daily allowance will be granted for marches of less than 20 miles in a day. Mileage will be allowed only when a journey of not less than 20 miles is performed in 24 hours. Mileage and daily allowance are not permissible for the same day.

4. During halts the full daily allowance will be granted, provided the officer's camp is not less than ten miles distant from his Head-quarters and provided he has to maintain carriage for his camp equipage. An officer who when so halting is not put to any such expense will be allowed half the daily allowance only.

5. No allowance will be admissible for a continuous halt of more than 10 days at the same place except under the special sanction of the Chief Commissioner or of any officer empowered by him in such cases.

6. The following will be the rates of daily allowance and mileage :—

Secretary to the Chief Commissioner.	Daily allowance 5 Rs. Mileage 6 annas.
Military Assistant.	
Revenue Commissioner.	
Chief Engineer or Superintending Engineer.	
Deputy Commissioners...	Daily allowance 4 Rs. Mileage 6 annas.
Executive or District Engineers	
Assistant Commissioners and Subordinate Judges ...	Daily allowance 3 Rs. Mileage 6 annas.
Assistant Engineers	
District Judge	Same allowances as Deputy Commissioners.
Comptroller	
Inspector General of Registration	
Director of Public Instruction	
Civil Surgeons	
Examiner, Public Works Accounts	
Anche Bakshi	Same allowances as Assistant Commissioners.
Forest Deputy and Assistant Conservators	Do do

Subordinate Officers.

Munsiffs	Daily allowance 2 Rs. Mileage 4 annas.
Forest Apprentices or Probationers...	Same term as Munsiffs.
Apothecaries	Daily allowance 3—10th of pay proper. Mileage 4 annas travelling by dâk on emergent duty.
Hospital Assistants	Do. Mileage 2 As.; or 4 As. when ordered on emergency to travel by dâk.
Deputy Inspector of Schools	Daily allowance 1 Rupee. Mileage 4 annas.
Sub-Deputy Inspector of Schools	Daily allowance 8 As. plus cartage 2 As. per mile.

Railway Travelling.

The existing Rules will be maintained until further orders.

Office Establishments.

The existing rates will be maintained, *viz* :—

3—10ths of pay per diem for men travelling by slow marches.
4—10ths for those of Forest Department.

When ordered to travel by dâk or rapidly ... ... { Actual expenses within a limit of 4 As. per mile for officials whose service is "Superior" under Pension Code. 1 Anna per mile for men whose service is "Inferior."

For Joining Appointments.

Officers of all grades when entitled to travel at the public expense in joining an appointment will ordinarily draw mileage at the rates specified above.

The 27th November 1880.

No. 133.—The Public Offices will be closed for the Christmas holidays from the evening of Wednesday the 22nd December, to re-open on Wednesday morning the 5th January 1881.

Heads of Departments will make arrangements as usual for emergent work.

The holidays are not applicable to Taluk Establishments.

By Order,

W. J. CUNINGHAM,
Secretary.

REVENUE DEPARTMENT.

NOTIFICATIONS.

The 8th November 1880.

No. 66.—It is hereby notified for public information that all the rights of the present jodidars and kayamguttadars in the undermentioned jodi and kayamgutta villages which have been duly attached in satisfaction of the arrears of revenue due to Government (as shewn in the subjoined statement) by the said jodidars, and kayamguttadars, will be sold by public auction at the places and on the dates mentioned in the annexed statement. The sale will commence at 11 A. M. on the dates specified and the villages will be knocked down to the highest bidder without reserve.

2. The purchaser will be required to deposit 25 per cent of the purchase money at the time of sale and where the remainder of the purchase money may not be paid within 15 days from the day of sale, the money so deposited shall be liable to forfeiture.

3. When such deposit shall not be made, nor the remaining purchase money paid up, the lands shall be re-sold at the expense and risk of the first purchaser.

4. Persons bidding at the sale may be required to state whether they bid on their own account or as agents, and in the latter case to deposit a written authority signed by their principals, otherwise their bids may be rejected.

5. The sale shall be stayed, if the defaulter, or any other person acting on his behalf or claiming an interest in the land, tenders the full amount of the arrears of revenue with the interest and other charges, provided such tender be made before sunset on the day previous to that appointed for the sale.

6. The sale of the property will not become absolute until the sale has been confirmed by the Chief Commissioner.

7. Purchasers having completed the payment of the purchase money will, as soon as the sale has been tered in the name of the purchaser, and a certificate of sale signed and sealed by the Deputy Commissioner errors of description and in estimated extent.

8. Provided parties deeming themselves aggrieved by the sale shall be at liberty to appeal to the final order in such appeal.

District.	Taluk.	Hobli.	Village.	Name of Jodidar and Kayamguttadar.	Boundaries of the Village. On the East.	On the West.	On the North.
Bangalore.	Devanhalli.	Jala.	*Jodi Villages.*				
			Shanbhoganhalli ...	Seshagiri Rao and Annajappa ...	Chikkanahalli ...	Sitakempanahalli ...	Buddappanahalli ...
			Adaresahalli ...	Vollabha Shastri and others.	Chikkanahosahalli.	Marsandra ..	Kasavanahalli ...
			Margondahalli ...	Srinivasachari and others.	Bettanhalli and Sadenahalli.	Surudenapura ...	Bettenhalli ...
			Begur ...	Subbabhat and others	Bandikodigenahalli.	Muttugadahalli ...	Chikkanahalli ...
			Jagaleti ...	Suranaranappa and others.	Marenahalli ...	Kattiganhalli, Palanahalli ...	Bagaluru ...
			Channahalli Chokkahalli.	Bavachari and others.	Chikjala ...	Betta Alasur and Palya.	Tarabanahalli ...
			Navarattana Agrahara.	Sattiyachari and others.	Minanakunte and Chattigere.	Hegganahalli and Tarabanahalli.	Sadenhalli ...
			Dasnayakanahalli ...	Divakarappa ...	Chokkanahalli Marasandra, Hoskote Taluk	Marenhalli ...	Marulukunte ...
			Surudewapura ...	Gundabhat and others	Margondahalli ...	Kadatanamatte ...	Aradesahalli ...
			Papanahalli ...	Nanjundashastri and others.	Bairahalli ..	Tarahunise ...	Kudaregere ...
			Kayamgutta Villages.				
	Hoskote.	Jangamkote.	Arisinakunte ...	Venkatasubbaiya ...	Gangamattanahalli.	Mailenahalli ...	Ganne ...
			Angatatte ...	Mahadeva Rao ..	Kakachokkanahalli Pura, Nayamangala	Venkatenhalli, Chandenhalli, Vadigenhalli ...	Settihalli, Bhatrenahalli ...
		Nandagudi.	Gerahalli ...	Subbanna ...	Marsandra, Malur Taluk.	Tavarekere ...	Gangapura ...
			Jodi Villages.				
	Doddaballapur.	Kakolu.	Mavalipura ...	Venkappa and 4 others	Koramarakunte ...	Sikote ...	Mailappanahalli ...
		Tubugere.	Yadalahalli ...	Dasacharu and Kuppacharu,	Germudenahalli Banikuppe, Goribidnur Taluk.	Sunkenhalli ...	Jodimuttanahalli, Goribidnur Taluk.
			Muttenagolhalli ...	Lakshmipati Shastri.	Perumalhalli ...	Batchalli ...	Naikdalahalli ...
			Sembupura ...	Srikantabhat and another.	Kunchiganalu ...	Togurughatti ...	Sannaghatti, Timmanahalli ...
		Tippur.	Basavanapura ...	Venkatsubbaiya and others.	Akkiramanahalli ...	Mandesapura ..	Galabilakunte, Byadrajaksandra.
Kolar.		Kasaba Hobli.	Managondhalli ...	Srinivasamurti ...	Obadenahalli, Rugunatapura.	Nagarakere ...	Siddanayakanhalli.
	Malur.	Lakkur.	Sonnur ...	Srinivasa Raghavachari and 2 others.	Channigarayapura...	Chaudadenhalli ...	Minasandra ...

confirmed by the Chief Commissioner, be placed in immediate possession, and the village will be regis-
will be granted to him. It is to be distinctly understood that the Government are not responsible for

Chief Commissioner within 30 days from the day of sale, and the purchase shall be conditional on the

On the South.	Estimated Extent.			Estimated Gross Rental or Beriz.			Quit-rent payable annually to Government.			Arrears of Government Revenue for which village is to be sold. For Dhatu or 1876—77.			For Isvara or 1877—78.			For Bahudhanya or 1878—79.			For Pramadi or 1879—80.			Total.			Date of Sale, &c.
	K.	K.	P.	Rs.	A.	P.	Rs.	As	P.																
Dibbur ...	19	9	2	465	11	11	416	15	10	275	15	11	401	15	11	76	15	11	197	7	10	952	7	7	15th Dec. 1880 at the Devanhalli Taluk Cutcherry.
Suradenapura ...	82	3	8	640	15	3	665	1	0	111	13	8	...	...	...	548	0	6	294	13	0	954	11	2	
Sadenahalli ...	30	0	0	88	10	6	81	8	10	...	...	...	...	...	...	21	15	0	41	8	10	63	7	10	
Masigenahalli and Boyilahalli.	20	0	0	217	0	0	213	9	0	31	8	6	0	13	0	6	13	0	77	8	3	116	10	9	
Kannur ...	24	13	15	252	1	2	263	6	6	106	6	6	...	...	...	206	11	3	83	1	6	396	3	3	
Kattiganhalli	26	5	1	108	0	0	105	12	0	...	...	...	28	5	3	...	...	...	3	6	0	31	11	3	17th Dec. do.
Tarabanahalli ...	17	18	0	75	7	3	63	11	6	10	1	11	4	1	11	17	4	7	43	11	6	75	3	11	
Chikkanahalli ...	29	12	1½	56	0	0	55	5	4	53	4	8	53	4	8	53	4	8	55	5	4	215	3	4	
Sadenahalli ...	45	0	0	658	15	8	556	3	0	...	...	...	6	12	0	206	1	6	297	15	6	510	13	0	18th do
Betta Alsur ...	5	1	0	57	10	0	23	8	8	21	12	10	3	12	5	...	...	...	23	8	8	49	1	11	17th Dec. 1880, at the Taluk Cutcherry.
Mailenahalli ...	64	18	2	186	0	0	199	11	4	123	5	1	193	5	1	82	13	8	77	11	4	477	3	2	
Vadigenahalli ...	18	0	0	429	4	7	342	9	4	...	...	...	...	...	...	15	15	8	179	4	8	195	4	4	
Ramasandra ...	10	0	0	57	0	0	57	0	0	8	15	2	11	15	2	0	3	2	37	14	1	58	15	7	15th Dec. 1880, at the Taluk Cutcherry.
Byalakere ...	30	0	0	400	0	2	391	9	5	9	12	0	62	15	10	...	...	...	89	1	7	161	13	5	
Bannikuppe ...	15	0	0	25	9	7	25	10	9	...	...	...	...	...	...	...	...	...	7	9	9	7	9	9	
Tavasihalli, Tirumagondahalli.	11	0	0	17	12	2	19	2	0	14	9	3	18	9	3	18	9	3	19	2	0	70	13	9	
Kanchiganalu Agrahara	9	12	0	20	10	6	22	5	0	12	10	8	6	4	10	2	8	0	22	5	0	43	12	6	
Bhaktarahalli ...	10	12	7	39	4	4	25	8	0	12	9	7	12	9	6	12	6	0	25	8	0	63	1	1	
Arahalli Guddadahalli.	19	7	15	292	11	8	286	14	0	245	2	2	155	2	2	156	0	6	180	14	0	737	2	10	
Siddanahalli ..	25	0	0	250	0	0	115	0	0	121	1	9	1	1	9	121	1	9	21	0	9	264	6	0	16th do.

The 18th November 1880.

No. 69.—The Chief Commissioner directs that the following Notification regarding sandalwood sales in the Mysore Province be substituted for the Notification, dated 10th November 1880 :—

The annual auction sales of sandalwood, the produce of Mysore, will be held on the dates and at the places mentioned below :—

Bangalore	8th December 1880.	..	150	Tons more or less.
Shimoga	22nd Do	..	450	Do.
Húnsúr	5th January 1881.	..	550	Do.
Seringapatam	10th Do	..		
Sorab	5th Do	..	100	Do.
Ságar	8th Do	..	50	Do.
Anantapur	11th Do	..	50	Do.
Tirthahalli	17th Do	..	120	Do.
Honnali	24th Do	..	120	Do.

Terms of Sale.—Those notified in the *Mysore Gazette* No. 48 of the 5th December 1874. The term of credit allowed for payment of sums due for wood purchased at Húnsúr, Seringapatam, Sorab, Ságar, Anantapur, Tirthahalli and Honnali will however terminate on the 25th March 1881, by which date all sums must be paid up, failing which the penalties will be enforced.

The 26th November 1880.

No. 74.—In continuation of Notification No. 52 of the 16th September last, the following arrangements for instruction in Medicine and Natural Science are announced :—

2. For collegiate instruction in medicine, scholarships will be granted tenable at the Grant Medical College, Bombay, or the Medical College at Madras. Four scholarships at Rs. 25 each per month will be at once thrown open from the Provincial Funds, and one more scholarship every year hereafter. The candidates for these scholarships should have passed at least the First-in-Arts examination, and should possess the necessary qualifications in regard to physical health, character, &c. The scholarship will be tenable for 5 years, the period required to complete the course prescribed, subject to periodical reports of good conduct and progress from the head of the Institution.

3. For training medical subordinates of the lower grade, the Chief Commissioner has resolved to establish a Local Medical School at Bangalore, the master appointed to which will also give instruction in Chemistry and Physiology, Human and Comparative, which are the most important subjects embraced in the University Natural Science course, both to the students of the Central College as well as to a limited number of outsiders desirous of availing themselves of the instruction.

4. The Local Medical School will provide a three years' course of instruction. Admission will be open only to students who have matriculated or have studied for a year in a Matriculation Class, and the school fee will be fixed at Rs. 2 per month.

5. In connection with this school, eleven scholarships of Rs. 8 each per month will be at once provided out of the Local Funds, and a similar number will be thrown open to candidates every year hereafter, *viz.*, 2 in each of the larger Districts of Bangalore, Mysore and Shimoga, and one in each of the remaining 5 Districts. The scholarship students and any other poor students who may be considered deserving will be admitted free. The Deputy Commissioners should at once take steps to select and send out the scholarship students from their respective Districts, taking care to satisfy themselves in communication with the Local Medical authorities in regard to the aptitude of the candidates for the profession. It is desirable that the school should open not later than the 15th January 1881.

6. With regard to instruction in Chemistry and Physiology to general students both from the Central College and from outside, arrangements will be made for giving it in the Central College at Bangalore for 3 days in the week and for 2 hours a day during a portion of the year. The fee will be fixed at Rs. 2 per month, being reduced to one rupee in the case of masters and students of Government and Aided schools.

7. The Chief Commissioner is pleased to appoint Mr. D. A. Choksi, Licentiate of Medicine and Surgery of the Bombay Medical College, as Head Master of the Medical School, Bangalore, with effect from the 6th instant.

The 3rd December 1880.

No. 75.—It is hereby notified for public information that all the rights of the present kayamguttadar in the undermentioned kayamgutta village in the Anekal Taluk of the Bangalore District, which has been duly attached in satisfaction of the arrears of revenue due to Government (as shewn in the subjoined statement) by the said kayamguttadar, will be sold by public auction at the place and on the date mentioned in the annexed statement. The sale will commence at 11 A. M. on that date and the village will be knocked down to the highest bidder without reserve.

2. The sale conveys the full right of occupancy free of all incumbrances created by the former occupant. This will not apply to other immovable property of the defaulter on which the arrear is not due, and the sale of which can only convey the right, title, and interest of the defaulter.

3. The purchaser will be required to deposit 25 per cent of the purchase money at the time of sale and where the remainder of the purchase money may not be paid within 15 days from the day of sale, the money so deposited shall be liable to forfeiture.

4. When such deposit shall not be made, nor the remaining purchase money paid up, the lands shall be re-sold at the expense and risk of the first purchaser.

5. Persons bidding at the sale may be required to state whether they bid on their own account, or as agents, and in the latter case to deposit a written authority signed by their principals, otherwise their bids may be rejected.

6. The sale shall be stayed, if the defaulter, or any other person acting on his behalf or claiming an interest in the land, tenders the full amount of the arrears of revenue with interest and other charges, provided such tender be made before sunset on the day previous to that appointed for the sale.

7. The sale of the property will not become absolute, until the sale has been confirmed by the Chief Commissioner.

8. Purchasers having completed the payment of the purchase money will, as soon as the sale has been confirmed by the Chief Commissioner, be placed in immediate possession, and the village will be registered in the name of the purchaser and a certificate of sale signed and sealed by the Deputy Commissioner will be granted to him. It is to be distinctly understood that the Government are not responsible for errors of description and in estimated extent.

9. Provided parties deeming themselves aggrieved by the sale shall be at liberty to appeal to the Chief Commissioner within thirty days from the day of sale and the purchase shall be conditional on the final order in such appeal.

Village.	Name of Kayamguttadar.	Boundaries of the Village.	Estimated Extent.			Estimated Gross Rental or Beriz.			Arrears of Government Revenue for which Village is to be sold.				Date of Sale, &c.
									Years.	Amount.			
			K.	K.	I.	Rs.	A.	P					
Srirampura (Bechirak.)	Krishna Shastri.	Bounded on the north by Rayasandra, on the south by Dodda Nagamangala, on the east by Gattihalli, on the west by Rayasandra and Dod Nagamangal a.	8	...	...	19	2	0	Iswara ...	18	4	11	4th January 1881, at the village.
									Bahudhanya.	18	9	0	
									Pramadi ...	19	2	0	
									Notice fee ...	3	0	0	
									Total..	58	15	11	

The 1st December 1880.

No. 76.—K. Ramachandra Rao, Amildar of the Gundlupet Taluk, is granted privilege leave for one month from the 17th November 1880.

By Order,

C. RANGACHARLU,
Revenue Secretary.

Notifications by the Chief Commissioner of Coorg.

GENERAL.

NOTIFICATIONS.

The 20th November 1880.

No. 20.—Under the provisions of Section 2 of Act XIV of 1880, "The Indian Census Act, 1880," the Chief Commissioner is pleased to extend all the provisions of the said Act to the Province of Coorg.

2. Under the provisions of Section 3 of the said Act, the Chief Commissioner is pleased to delegate to the Superintendent of Coorg the power to appoint any person by name or in virtue of his office to take, or aid in, or supervise the taking of the Census within the Province of Coorg.

3. And under Section 12 of the said Act, the Chief Commissioner is pleased to declare that prosecutions under the said Act, or for neglecting or refusing to do anything required by the said Act to be done, shall be instituted before the Magistrate of the District, or before a First Class Magistrate, and that no such prosecution shall be instituted except with the previous sanction of the Superintendent of Coorg.

No. 21.—Under the provisions of Clause (*C*) Section 6 of the Scheduled Districts Act, 1874, the Chief Commissioner of Coorg is pleased to direct that the jurisdiction of a High Court, under the Code of Criminal Procedure, save and except in reference to proceedings against European British Subjects, shall be exercised by the Judicial Commissioner of Coorg.

The 27th November 1880.

No. 23.—The following paper is re-published for general information :—

From the Secretary to the Government of India, Legislative Department, To the Chief Commissioner of Coorg—No. 1267, dated Simla, the 18th November 1880.

I am directed to request that you will be so good as to cause it to be made known to all public bodies and associations in the habit of addressing petitions and memorials to this Department, regarding measures pending in the Council of the Governor General, that such documents, when sent in print, should be printed on foolscap size paper, and that a large number of spare copies (80, if available) should be sent, as otherwise they have to be re-printed before being circulated to the Members of Council.

By Order,

W. J. CUNINGHAM,
Secretary.

THE

MYSORE GAZETTE.

No. 49 Published by Authority. of 1880.

BANGALORE, SATURDAY, DECEMBER 11, 1880.

☞ Separate paging is given to this Part in order that it may be filed as a separate compilation.

CONTENTS.

PAGE.

PART I.—Notifications by the Chief Commissioner of Mysore and Coorg.—Notifications by the Government of India... 365—368

PART II.—Notifications, &c., by the Judicial Commissioner; Survey and Settlement Commissioner; Superintendent of Inam Settlements; Comptroller; Public Works Officers; Military Assistant; Inspector General of Registration; Director of Public Instruction; Deputy Surgeon General of Hospitals; Anche Bakshi; President of the Bangalore Municipal Boards; District and Sessions Judges; Deputy Commissioners of Districts.—Season Reports; Meteorological Registers; Postal Notices, &c. ... ... 641—660

PART III.—Acts and Bills of the Governor Genl. of India in Council, &c. Nil.

PART IV.—Miscellaneous Papers.-Madras Agri-Horticultural Society 3—4

SUPPLEMENT.—Abstract of Season or Intermediate Reports, &c.

PART I.

Notifications by the Chief Commissioner of Mysore.

GENERAL DEPARTMENT.

NOTIFICATIONS.

The 4th December 1880.

No. 134.—Mr. K. Ramachandra Rao, Officiating Assistant Commissioner, delivered over, and Mr. T. Raghaveudra Rao, Assistant Commissioner, received charge of the Shimoga District Treasury, on the afternoon of the 16th November 1880.

The 6th December 1880.

No. 135.—Under the provisions of Section 6 of the Indian Christian Marriage Act (XV of 1872), the Chief Commissioner hereby licenses the Reverend M. B. Kirk of the Methodist Episcopal Church, Bangalore, to solemnize marriages within the Territories of the Mysore State.

The 6th December 1880.

No. 136.—Mr. E. H. Johns, Assistant Engineer, Mysore State Railway, has passed the prescribed Examination in Kanarese, according to the standard laid down in the Public Works Department Code, 4th Edition, Chapter II, Section 1, Para 22.

The 7th December 1880.

No. 137.—Mr. T. Raghavendra Rao, Revenue Assistant Commissioner, is invested with the powers of a Magistrate of the 1st Class, to be exercised in the District of Shimoga, together with the additional powers mentioned in Section 27 (*a*) of the Code of Criminal Procedure, with the exception of that referred to in clause—

(4) Power to entertain cases without complaint (Section 142) and clause

(6) Power to try summarily (Section 222).

The 8th December 1880.

No. 138.—With reference to the Notifications of the Medical Department, dated the 11th May and 4th August 1880, inviting candidates for the grade of Medical Pupil, the undermentioned lads having been found after a competitive examination qualified and eligible for medical service, are accordingly admitted as Medical Pupils from 1st November 1880 :—

No.	Names.	Where educated.
1.	S. Hanumanta Naidu ..	.. Salem College.
2.	Y. Papaiya Naidu ..	.. Empress of India, Black Town Seminary, Madras.
3.	T. R. Dharmalinga Modaliar ..	.. Government Normal School, Vellore.

No. 139.—The revised rates for the carriage of parcels by anche, sanctioned, as an experimental measure, in Chief Commissioner's Notification No. 318, dated 31st March 1880, are hereby made permanent.

No. 140.—Mr. T. Ananda Rao, Assistant Commissioner, in charge of Palace Establishments, is granted three weeks' privilege leave from the 9th instant, or such date as he may avail himself of the same.

By Order,
C. RANGACHARLU,
Secretary.

REVENUE DEPARTMENT.

NOTIFICATIONS.

The 18th November 1880.

No. 69.—The Chief Commissioner directs that the following Notification regarding sandalwood sales in the Mysore Province be substituted for the Notification, dated 10th November 1880 :—

The annual auction sales of sandalwood, the produce of Mysore, will be held on the dates and at the places mentioned below :—

*	*	*	*	*
Shimoga ..	..	22nd December 1880.	..	450 Tons more or less.
Húnsúr ..	..	5th January 1881.	..	} 550 Do.
Seringapatam ..	..	10th Do	..	
Sorab ..	..	5th Do	..	100 Do.
Ságar ..	..	8th Do	..	50 Do.
Anantapur ..	..	11th Do	..	50 Do.
Tirthahalli ..	..	17th Do	..	120 Do.
Honnali ..	..	24th Do	..	120 Do.

Terms of Sale.—Those notified in the *Mysore Gazette* No. 48 of the 5th December 1874. The term of credit allowed for payment of sums due for wood purchased at Húnsúr, Seringapatam, Sorab, Ságar, Anantapur, Tirthahalli and Honnali will however terminate on the 25th March 1881, by which date all sums must be paid up, failing which the penalties will be enforced.

The 26th November 1880.

No. 74.—In continuation of Notification No. 52 of the 16th September last, the following arrangements for instruction in Medicine and Natural Science are announced :—

2. For collegiate instruction in medicine, scholarships will be granted tenable at the Grant Medical College, Bombay, or the Medical College at Madras. Four scholarships at Rs. 25 each per month

will be at once thrown open from the Provincial Funds, and one more scholarship every year hereafter. The candidates for these scholarships should have passed at least the First-in-Arts examination, and should possess the necessary qualifications in regard to physical health, character, &c. The scholarship will be tenable for 5 years, the period required to complete the course prescribed, subject to periodical reports of good conduct and progress from the head of the Institution.

3. For training medical subordinates of the lower grade, the Chief Commissioner has resolved to establish a Local Medical School at Bangalore, the master appointed to which will also give instruction in Chemistry and Physiology, Human and Comparative, which are the most important subjects embraced in the University Natural Science course, both to the students of the Central College as well as to a limited number of outsiders desirous of availing themselves of the instruction.

4. The Local Medical School will provide a three years' course of instruction. Admission will be open only to students who have matriculated or have studied for a year in a Matriculation Class, and the school fee will be fixed at Rs. 2 per month.

5. In connection with this school, eleven scholarships of Rs. 8 each per month will be at once provided out of the Local Funds, and a similar number will be thrown open to candidates every year hereafter, *viz.*, 2 in each of the larger Districts of Bangalore, Mysore and Shimoga, and one in each of the remaining 5 Districts. The scholarship students and any other poor students who may be considered deserving will be admitted free. The Deputy Commissioners should at once take steps to select and send out the scholarship students from their respective Districts, taking care to satisfy themselves in communication with the Local Medical authorities in regard to the aptitude of the candidates for the profession. It is desirable that the school should open not later than the 15th January 1881.

6. With regard to instruction in Chemistry and Physiology to general students both from the Central College and from outside, arrangements will be made for giving it in the Central College at Bangalore for 3 days in the week and for 2 hours a day during a portion of the year. The fee will be fixed at Rs. 2 per month, being reduced to one rupee in the case of masters and students of Government and Aided schools.

7. The Chief Commissioner is pleased to appoint Mr. D. A. Choksi, Licentiate of Medicine and Surgery of the Bombay Medical College, as Head Master of the Medical School, Bangalore, with effect from the 6th instant.

The 3rd December 1880.

No. 75.—It is hereby notified for public information that the undermentioned kayamgutta village in the Anekal Taluk of the Bangalore District, which has been duly attached in satisfaction of the arrears of revenue due to Government (as shewn in the subjoined statement) by the said kayamguttadar, will be sold by public auction at the place and on the date mentioned in the annexed statement. The sale will commence at 11 A. M. on that date and the village will be knocked down to the highest bidder without reserve.

2. The purchaser will be required to deposit 25 per cent of the purchase money at the time of sale and where the remainder of the purchase money may not be paid within 15 days from the day of sale, the money so deposited shall be liable to forfeiture.

3. When such deposit shall not be made, nor the remaining purchase money paid up, the lands shall be re-sold at the expense and risk of the first purchaser.

4. Persons bidding at the sale may be required to state whether they bid on their own account, or as agents, and in the latter case to deposit a written authority signed by their principals, otherwise their bids may be rejected.

5. The sale shall be stayed, if the defaulter, or any other person acting on his behalf or claiming an interest in the land, tenders the full amount of the arrears of revenue with interest and other charges, provided such tender be made before sunset on the day previous to that appointed for the sale.

6. The sale of the property will not become absolute, until the sale has been confirmed by the Chief Commissioner.

7. Purchasers having completed the payment of the purchase money will, as soon as the sale has been confirmed by the Chief Commissioner, be placed in immediate possession, and the village will be registered in the name of the purchaser and a certificate of sale signed and sealed by the Deputy Commis-

sioner will be granted to him. It is to be distinctly understood that the Government are not responsible for errors of description and in estimated extent.

8. Provided parties deeming themselves aggrieved by the sale shall be at liberty to appeal to the Chief Commissioner within thirty days from the day of sale and the purchase shall be conditional on the final order in such appeal.

Village.	Name of Kayamguttadar.	Boundaries of the Village.	Estimated Extent.			Estimated Gross Rental or Beriz.			Arrears of Government Revenue for which Village is to be sold.				Date of Sale, &c.
									Years.	Amount.			
			K.	K	I.	Rs.	A.	P					
Srirampura (Bechirak.)	Krishna Shastri.	Bounded on the north by Rayasandra, on the south by Dodda Nagamangala, on the east by Gattihalli, on the west by Rayasandra and Dodda Nagamangala.	8	...	...	19	2	0	Iswara ...	18	4	11	4th January 1881, at the village.
									Bahudhanya.	18	9	0	
									Pramadi ...	19	2	0	
									Notice fee ...	3	0	0	
									Total..	58	15	11	

The 10*th December* 1880.

No. 77.—A. Raghavendra Rao, Amildar of the Channagiri Taluk, is granted one month's privilege leave from such date as he may avail himself of the same.

H. Sitaramaiya, Police Inspector of the Channagiri Taluk, is appointed to act as 5th Grade Amildar and 3rd Class Magistrate of the Channagiri Taluk, during Raghavendra Rao's absence or until further orders.

By Order,

C. RANGACHARLU,
Revenue Secretary.

Notifications by the Chief Commissioner of Coorg.

GENERAL.

NOTIFICATIONS.

The 20*th November* 1880.

No. 20.—Under the provisions of Section 2 of Act XIV of 1880, "The Indian Census Act, 1880," the Chief Commissioner is pleased to extend all the provisions of the said Act to the Province of Coorg.

2. Under the provisions of Section 3 of the said Act, the Chief Commissioner is pleased to delegate to the Superintendent of Coorg the power to appoint any person by name or in virtue of his office to take, or aid in, or supervise the taking of the Census within the Province of Coorg.

3. And under Section 12 of the said Act, the Chief Commissioner is pleased to declare that prosecutions under the said Act, or for neglecting or refusing to do anything required by the said Act to be done, shall be instituted before the Magistrate of the District, or before a First Class Magistrate, and that no such prosecution shall be instituted except with the previous sanction of the Superintendent of Coorg.

No. 21.—Under the provisions of Clause (*C*) Section 6 of the Scheduled Districts Act, 1874, the Chief Commissioner of Coorg is pleased to direct that the jurisdiction of a High Court, under the Code of Criminal Procedure, save and except in reference to proceedings against European British Subjects, shall be exercised by the Judicial Commissioner of Coorg.

By Order,

W. J. CUNNINGHAM,
Secretary.

183

THE MYSORE GAZETTE.

No. 50 Published by Authority. of 1880.

BANGALORE, SATURDAY, DECEMBER 18, 1880.

☞ Separate paging is given to this Part in order that it may be filed as a separate compilation.

CONTENTS.

	PAGE.
PART I.—Notifications by the Chief Commissioner of Mysore and Coorg.—Notifications by the Government of India...	369—374
PART II.—Notifications, &c., by the Judicial Commissioner; Survey and Settlement Commissioner; Superintendent of Inam Settlements; Comptroller; Public Works Officers; Military Assistant; Inspector General of Registration; Director of Public Instruction; Deputy Surgeon General of Hospitals; Anche Bakshi; President of the Bangalore Municipal Boards; District and Sessions Judges; Deputy Commissioners of Districts.—Season Reports; Meteorological Registers; Postal Notices, &c.	661—686
PART III.—Acts and Bills of the Governor Genl. of India in Council, &c.	Nil.
PART IV.—Miscellaneous Papers.-Madras Agri-Horticultural Society	5—6
SUPPLEMENT.—Abstract of Season or Intermediate Reports, &c.	

PART I.

Notifications by the Chief Commissioner of Mysore.

GENERAL DEPARTMENT.

NOTIFICATION.

The 15th December 1880.

No. 141.—S. Varadarajaiengar, Munsiff and 2nd Class Magistrate, Turuvekere, is directed, under the proviso to Section 335 of the Code of Criminal Procedure, to take down the evidence of complainants and witnesses with his own hand in the English language.

By Order,

C. RANGACHARLU,
Secretary.

REVENUE DEPARTMENT.

NOTIFICATIONS.

The 18th November 1880.

No. 69.—The Chief Commissioner directs that the following Notification regarding sandalwood sales in the Mysore Province be substituted for the Notification, dated 10th November 1880 :—

The annual auction sales of sandalwood, the produce of Mysore, will be held on the dates and at the places mentioned below :—

*	*	*	*
Shimoga	22nd December 1880.	450	Tons more or less.
Húnsúr	5th January 1881.	550	Do.
Seringapatam	10th Do		
Sorab	5th Do	100	Do.
Ságar	8th Do	50	Do.
Anantapur	11th Do	50	Do.
Tirthahalli	17th Do	120	Do.
Honnali	24th Do	120	Do.

Terms of Sale.—Those notified in the *Mysore Gazette* No. 48 of the 5th December 1874. The term of credit allowed for payment of sums due for wood purchased at Húnsúr, Seringapatam, Sorab, Ságar, Anantapur, Tirthahalli and Honnali will however terminate on the 25th March 1881, by which date all sums must be paid up, failing which the penalties will be enforced.

The 3rd December 1880.

No. 75.—It is hereby notified for public information that the undermentioned kayamgutta village in the Anekal Taluk of the Bangalore District, which has been duly attached in satisfaction of the arrears of revenue due to Government (as shewn in the subjoined statement) by the said kayamguttadar, will be sold by public auction at the place and on the date mentioned in the annexed statement. The sale will commence at 11 A. M. on that date and the village will be knocked down to the highest bidder without reserve.

2. The purchaser will be required to deposit 25 per cent of the purchase money at the time of sale and where the remainder of the purchase money may not be paid within 15 days from the day of sale, the money so deposited shall be liable to forfeiture.

3. When such deposit shall not be made, nor the remaining purchase money paid up, the lands shall be re-sold at the expense and risk of the first purchaser.

4. Persons bidding at the sale may be required to state whether they bid on their own account, or as agents, and in the latter case to deposit a written authority signed by their principals, otherwise their bids may be rejected.

5. The sale shall be stayed, if the defaulter, or any other person acting on his behalf or claiming an interest in the land, tenders the full amount of the arrears of revenue with interest and other charges, provided such tender be made before sunset on the day previous to that appointed for the sale.

6. The sale of the property will not become absolute, until the sale has been confirmed by the Chief Commissioner.

7. Purchasers having completed the payment of the purchase money will, as soon as the sale has been confirmed by the Chief Commissioner, be placed in immediate possession, and the village will be registered in the name of the purchaser and a certificate of sale signed and sealed by the Deputy Commissioner will be granted to him. It is to be distinctly understood that the Government are not responsible for errors of description and in estimated extent.

8. Provided parties deeming themselves aggrieved by the sale shall be at liberty to appeal to the Chief Commissioner within thirty days from the day of sale and the purchase shall be conditional on the final order in such appeal.

185

Village.	Name of Kayamgutta-dar.	Boundaries of the Village.	Estimated Extent.			Estimated Gross Rental or Beriz.			Arrears of Government Revenue for which Village is to be sold.				Date of Sale, &c.
									Years.	Amount.			
			K.	K	J.	Rs.	A.	P.					
Srirampura (Bechirak.)	Krishna Shastri.	Bounded on the north by Rayasandra, on the south by Dodda Nagamangala, on the east by Gattihalli, on the west by Rayasandra and Dodda Nagamangala.	8	...	...	19	2	0	Iswara ...	18	4	11	4th January 1881, at the village.
									Bahudhanya.	18	9	0	
									Pramadi ...	19	2	0	
									Notice fee ...	3	0	0	
									Total...	58	15	11	

The 9th December 1880.

No. 78.—It is hereby notified for public information that the undermentioned jodi village, which has been duly attached in satisfaction of the arrears of revenue due to Government (as shewn in the subjoined statement) by the said jodidars, will be sold by public auction at the Deputy Commissioner's Office at Chitaldroog on Wednesday the 19th January 1881, before the Deputy Commissioner, or, in his absence, before the Assistant Commissioner present. The sale will commence at 11 A. M. on that date and the village will be knocked down to the highest bidder without reserve.

2. The purchaser will be required to deposit 25 per cent of the purchase money at the time of sale, and where the remainder of the purchase money may not be paid within 15 days from the day of sale, the money so deposited shall be liable to forfeiture.

3. When such deposit shall not be made, nor the remaining purchase money paid up, the lands shall be re-sold at the expense and risk of the first purchaser.

4. Persons bidding at the sale may be required to state whether they bid on their own account or as agents, and in the latter case to deposit a written authority signed by their principals, otherwise their bids may be rejected.

5. The sale shall be stayed, if the defaulter, or any other person acting on his behalf or claiming an interest in the land, tenders the full amount of the arrears of revenue with the interest and other charges, provided such tender be made before sunset on the day previous to that appointed for the sale.

6. The sale of the property will not become absolute until the sale has been confirmed by the Chief Commissioner.

7. Purchasers having completed the payment of the purchase money will, as soon as the sale has been confirmed by the Chief Commissioner, be placed in immediate possession, and the village will be registered in the name of the purchaser, and a certificate of sale signed and sealed by the Deputy Commissioner will be granted to him. It is to be distinctly understood that the Government are not responsible for errors of description and in estimated extent.

8. Provided parties deeming themselves aggrieved by the sale shall be at liberty to appeal to the Chief Commissioner within 30 days from the day of sale, and the purchase shall be conditional on the final order in such appeal.

District.	Taluk.	Village.	Names of Jodidars.	Boundaries of the Village.	Estimated Extent.	Estimated Gross Rental or Beriz.	Quit-Rent payable annually to Government.	Arrears of Government Revenue for which Village is to be sold.			
								Year.	Amount.		
Chitaldroog.	Budihal.	Ajjiguddo.	1. Narasamma. 2. Ramabhatta. 3. Shamabhatta and 4 others.	Bounded on the north by Astu Hal and Madana madu, on the east by Arogondauahalli, on the south by Katerikehal, on the west by Janeharu.	A. C. D. G. 851 75 793·20 58·55	Rs. 400—0—0.	Rs. 221—0—0.	1876—77.	276	6	0

The 10*th December* 1880.

No. 79.—In modification of the Chief Commissioner's Proceedings No. 2155—395 of the 10th July 1880, published at page 210, Part I, of the *Mysore Gazette*, dated 7th August 1880, the subjoined letter from the Judicial Commissioner of Mysore is published for the information and guidance of all officers concerned.

"From the Judicial Commissioner of Mysore, To the Secretary to the Chief Commissioner of Mysore, Revenue Department, No. 2028—183, dated Bangalore, 22nd November 1880.

"With reference to your No. 4749—850, dated 17th November 1880, requesting that the attention of the Civil Courts be drawn to the provisions of Section 7 of the Indian Stamp Act I of 1879, I have the honor to state that I am inclined to think that a certificate of sale of several lots of property belonging to one judgment-debtor and in satisfaction of one decree is rightly charged on the aggregate amount of purchase money, and that such a certificate does not come within the meaning of Section 7 as an instrument comprising or relating to several distinct matters.

2. It is advisable, I think, that the Civil Courts should act on their own views on such points, until they are determined judicially by some authoritative decision of the High Courts."

The 16*th December* 1880.

No. 80.—Under the provisions of Section 6 of the Land Acquisition Act No. X of 1870, it is hereby declared that the undermentioned ground near Kasba Alsur of the Bangalore Taluk is required for a public purpose, *viz.*, the improvement of the Military Water-works below the Alsur tank :—

Survey No. 107 of the Alsur Village consisting of 28 guntas of land assessed at Rs. 6—8—0 which stood in the name of Shek Imam, (transferred by him recently to V. Sadasiva Modaliar), and a narrow strip of land situated to the east of the above, comprising an area of 145 square yards and 5 square feet, sold to him by the Municipality, both bounded on the north by the Military Water-works, on the south by road to Dhobi ghat, on the east by Survey No. 106, a vacant piece of ground, now the property of the Madras Government, on the west by present Dhobi ghat, property of the Municipality.

A plan of the land may be inspected at the Deputy Commissioner's Office.

The 17*th December* 1880.

No. 81.—Tenders are hereby invited for the exclusive privilege of selling toddy in the District of Bangalore, (including the Town and Cantonment of Bangalore), for 3 years, *viz.*, from 1st April 1881 to 31st March 1884.

2. Each tender must specify the annual amount offered, and must be accompanied by a deposit of Rs. 1,000 in cash or Government securities, and enclosed in a cover superscribed with the words "Tender for the exclusive privilege of selling toddy in the Bangalore District."

3. The tenders must be delivered at the Office of the Deputy Commissioner, Bangalore District, on or before noon on the 7th February 1881, when they will be opened in the presence of the applicants. The applicant whose tender may be selected by the Deputy Commissioner for recommendation to the Chief Commissioner, will be required to deposit at once, in cash or in Government securities, a further sum equal to one-twelfth (or one month's instalment) of the amount of the annual rent tendered, failing which the deposit made with the tender will be forfeited.

4. When the decision of the Chief Commissioner is announced, the deposits made by applicants whose tenders have been rejected will be thereupon returned to them on their application. The Chief Commissioner reserves to himself the power of rejecting the highest or any tender without assigning any reason.

5. The party whose tender may be accepted shall, within eight days after the Chief Commissioner's decision has been communicated to him, deposit with the Deputy Commissioner a sum, in cash or Government securities duly endorsed, which, with the sums previously deposited under para 3, shall be equal to one-fourth of the amount of the annual rent tendered, and shall execute an agreement in the usual form on proper stamp, binding himself to conform to the conditions hereinafter set forth, and if he fails or refuses to sign the agreement or to make the deposit required, the deposits already made will be forfeited to Government and the lease otherwise disposed of.

Conditions.

I. The annual contract amount shall be paid by monthly instalments, together with the prescribed local cess of one anna on every rupee, computed on such contract amount, into the District Treasury, on or before the 5th of the month following that for which the payment is due; and interest at the rate of 6 per cent per annum shall be paid on all arrears left outstanding on that date. Such arrears shall, if they remain unpaid after the lapse of the month in which they are payable, be recoverable by attachment and sale of the property of the lessee in the manner prescribed by existing rules for the recovery of arrears of land revenue, and it shall be at the discretion of the Deputy Commissioner, with the Chief Commissioner's sanction, to declare the lease cancelled, and to resell or retain it under Government management and to recover all outstanding arrears with interest, and any losses which may result from such resale or disposal of the contract, by confiscation of the sum deposited, and if necessary, by attachment and sale of the property of the defaulter, under the rules in force for the recovery of arrears of land revenue.

II. The usual licenses to retail vendors will be issued by the Deputy Commissioner, and no alteration shall be made by the lessee in the locality or number of the retail shops now opened for sale of toddy, without the express sanction of the Deputy Commissioner. The Deputy Commissioner is competent to order any shops to be closed on grounds of public expediency.

III. Grain, goods, ornaments, wearing apparel or other property should not be received in barter or pawn for toddy.

IV. The lessee shall be required to conform to any additional rules which may be prescribed from time to time by the Chief Commissioner.

V. No interference shall be made by the lessee with the rights, as already ascertained and defined, of the holders of jodi, sarvamanyam and kayamgutta villages, who are authorized by the sannad, &c., to exercise such rights within the limits of their villages. Disputes regarding such rights will be decided by the Deputy Commissioner of the District, and the lessee shall be bound by such decision, which shall be subject however to the confirmation or otherwise, on appeal, of the Chief Commissioner.

VI. No toddy shops shall be opened before 6 A. M., and all shops shall be closed at 9 P. M.

VII. All shops for the sale of toddy on or adjacent to the line of march shall be closed while a Regiment or Detachment of European soldiers is passing by, or during its temporary halt in the vicinity, and no compensation shall be claimable for loss alleged to have occurred or to have been occasioned thereby, and it shall be lawful for such troops to have their own abkari contractor, without claiming any compensation on that account.

VIII. The lessee will be allowed the use of the date trees growing on Government waste land in the District for the extraction of toddy either for sale within the Province or for manufacture into jaggory, but he will have no claims to date trees situated in lands which are now or may hereafter be occupied for cultivation or for other purposes, nor to compensation on account of any date trees or topes, which the Government may, at any time, consider necessary to reserve for other purposes, or for the supply of toddy to other Districts.

IX. The lessee will have no claims to compensation or remission on account of any arrangements which may be made by Government in regard to beer or other descriptions of liquor or spirit than toddy. The Chief Commissioner reserves to himself the power to terminate the lease as regards any part of the District on public grounds, awarding a reasonable compensation for the same.

X. No toddy shall be knowingly sold or given to any European soldier, sailor, European or Eurasian woman or child, or to a sepoy or policeman when on duty, and any breach of this rule shall render the lessee or the vendor severally or jointly liable to the payment of a penalty of Rs. 50 for the first offence, and one-hundred rupees for every subsequent offence, as well as for the cancelment of the vendor's license.

XI. The lessee shall be responsible that his servants or agents are prevented from extracting toddy from young immature date trees, the trunks of which are less than one yard in height from the ground to the springing of the branches, nor shall any leaves be cut from such trees, and any breach of these rules shall render the lessee liable to the payment of a penalty of Rs. 50 for the first offence, and Rs. 100 for every subsequent offence.

XII. The rates at which toddy shall be sold to the public and bakers shall be as follows :—

	Maximum. Prices per Seer.			Minimum. Prices per Seer.			Fixed Price per Seer for Bakers.		
	Rs.	A.	P.	Rs.	A.	P.	Rs.	A.	P.
In Cantonment and Pettah of Bangalore..	0	1	6	0	1	0	0	0	5
In the Kasbas of Taluks of the Bangalore District ..	0	1	3	0	0	10			
In the Villages of do. ..	0	1	0	0	0	8			

6. Information in regard to the past revenue and any other matters can be had on application at the Deputy Commissioner's Office.

By Order,

C. RANGACHARLU,
Revenue Secretary.

PUBLIC WORKS DEPARTMENT.

NOTIFICATION.

The 12th December 1880.

No. 36.—Mr. A. S. Nagavkar, Assistant Engineer, 3rd Grade, has passed the test prescribed in Public Works Code, Chapter II, Section I, para 16.

By Order,

C. BOWEN, *Major*, R. E.,
Offg. Secretary, P. W. D.

Notifications, &c., by the Government of India.

PUBLIC WORKS DEPARTMENT.

NOTIFICATION.

Fort William, the 9th December 1880.

No. 406.—The services of Mr. E. H. Johns, Assistant Engineer, 2nd Grade, Railway Branch, Mysore, are placed at the disposal of the Director General of Railways.

ALEX. FRASER, *Major-Genl.*, R. E.,
Secy. to the Govt. of India.

THE

MYSORE GAZETTE.

No. 51 Published by Authority. of 1880.

BANGALORE, SATURDAY, DECEMBER 25, 1880.

☞ Separate paging is given to this Part in order that it may be filed as a separate compilation.

CONTENTS.

PAGE.

PART I.—Notifications by the Chief Commissioner of Mysore and Coorg.—Notifications by the Government of India... 375—378

PART II.—Notifications, &c., by the Judicial Commissioner; Survey and Settlement Commissioner; Superintendent of Inam Settlements; Comptroller; Public Works Officers; Military Assistant; Inspector General of Registration; Director of Public Instruction; Deputy Surgeon General of Hospitals; Anche Bakshi; President of the Bangalore Municipal Boards; District and Sessions Judges; Deputy Commissioners of Districts.—Season Reports; Meteorological Registers; Postal Notices, &c. ... ... 687—696

PART III.—Acts and Bills of the Governor Genl. of India in Council, &c. Nil.

PART IV.—Miscellaneous Papers. Nil.

SUPPLEMENT.—Abstract of Season or Intermediate Reports, &c. 1—2

PART I.

Notifications by the Chief Commissioner of Mysore.

GENERAL DEPARTMENT.

NOTIFICATION.

The 21st December 1880.

No. 142.—Mr. T. Raghavendra Rao, Assistant Commissioner, Shimoga District, is granted privilege leave of absence from the 7th to the 16th November 1880.

By Order,

C. RANGACHARLU,
Secretary.

REVENUE DEPARTMENT.

NOTIFICATIONS.

The 18th November 1880.

No. 69.—The Chief Commissioner directs that the following Notification regarding sandalwood sales in the Mysore Province be substituted for the Notification dated 10th November 1880 :—

The annual auction sales of sandalwood, the produce of Mysore, will be held on the dates and at the places mentioned below :—

* * * * * *

Húnsúr	5th January 1881. ..	550	Tons more or less.
Seringapatam	10th Do. ..		
Sorab	5th Do ..	100	Do.
Ságar	8th Do ..	50	Do.
Anantapur	11th Do ..	50	Do.
Tirthahalli	17th Do ..	120	Do.
Honnali	24th Do ..	120	Do.

Terms of Sale.—Those notified in the *Mysore Gazette* No. 48 of the 5th December 1874. The term of credit allowed for payment of sums due for wood purchased at Húnsúr, Seringapatam, Sorab, Ságar, Anantapur, Tirthahalli and Honnali will however terminate on the 25th March 1881, by which date all sums must be paid up, failing which the penalties will be enforced.

The 9th December 1880.

No. 78.—It is hereby notified for public information that the undermentioned jodi village, which has been duly attached in satisfaction of the arrears of revenue due to Government (as shewn in the subjoined statement) by the said jodidars, will be sold by public auction at the Deputy Commissioner's Office at Chitaldroog on Wednesday the 19th January 1881, before the Deputy Commissioner, or, in his absence, before the Assistant Commissioner present. The sale will commence at 11 A. M. on that date and the village will be knocked down to the highest bidder without reserve.

2. The purchaser will be required to deposit 25 per cent of the purchase money at the time of sale, and where the remainder of the purchase money may not be paid within 15 days from the day of sale, the money so deposited shall be liable to forfeiture.

3. When such deposit shall not be made, nor the remaining purchase money paid up, the lands shall be re-sold at the expense and risk of the first purchaser.

4. Persons bidding at the sale may be required to state whether they bid on their own account or as agents, and in the latter case to deposit a written authority signed by their principals, otherwise their bids may be rejected.

5. The sale shall be stayed, if the defaulter, or any other person acting on his behalf or claiming an interest in the land, tenders the full amount of the arrears of revenue with the interest and other charges, provided such tender be made before sunset on the day previous to that appointed for the sale.

6. The sale of the property will not become absolute until the sale has been confirmed by the Chief Commissioner.

7. Purchasers having completed the payment of the purchase money will, as soon as the sale has been confirmed by the Chief Commissioner, be placed in immediate possession, and the village will be registered in the name of the purchaser, and a certificate of sale signed and sealed by the Deputy Commissioner will be granted to him. It is to be distinctly understood that the Government are not responsible for errors of description and in estimated extent.

8. Provided parties deeming themselves aggrieved by the sale shall be at liberty to appeal to the Chief Commissioner within 30 days from the day of sale, and the purchase shall be conditional on the final order in such appeal.

District.	Taluk.	Village.	Names of Jodidars.	Boundaries of the Village.	Estimated Extent.	Estimated Gross Rental or Beriz.	Quit-Rent payable annually to Government	Arrears of Government Revenue for which Village is to be sold.	
								Year.	Amount.
Chitaldroog.	Budihal.	Ajjiguddé.	1. Narasamma. 2. Ramabhatta. 3. Shamabhatta and 4 others.	Bounded on the north by Astu Hal and Madana madu, on the east by Arogondanahalli, on the south by Katerikehal, on the west by Janeharu.	A. C. D. G. 851 75 793·20 58·55	Rs. 400—0—0.	Rs. 221—0—0.	1876—77.	276 6 0

The 16th December 1880.

No. 80.—Under the provisions of Section 6 of the Land Acquisition Act No. X of 1870, it is hereby declared that the undermentioned ground near Kasba Alsur of the Bangalore Taluk is required for a public purpose, *viz.*, the improvement of the Military Water-works below the Alsur tank :—

Survey No. 107 of the Alsur Village consisting of 28 guntas of land assessed at Rs. 6—8—0 which stood in the name of Shek Imam, (transferred by him recently to V. Sadasiva Modaliar), and a narrow strip of land situated to the east of the above, comprising an area of 145 square yards and 5 square feet, sold to him by the Municipality, both bounded on the north by the Military Water-works, on the south by road to Dhobi ghat, on the east by Survey No. 106, a vacant piece of ground, now the property of the Madras Government, on the west by present Dhobi ghat, property of the Municipality.

A plan of the land may be inspected at the Deputy Commissioner's Office.

The 17th December 1880.

No. 81.—Tenders are hereby invited for the exclusive privilege of selling toddy in the District of Bangalore, (including the Town and Cantonment of Bangalore), for 3 years, *viz.*, from 1st April 1881 to 31st March 1884.

2. Each tender must specify the annual amount offered, and must be accompanied by a deposit of Rs. 1,000 in cash or Government securities, and enclosed in a cover superscribed with the words "Tender for the exclusive privilege of selling toddy in the Bangalore District."

3. The tenders must be delivered at the Office of the Deputy Commissioner, Bangalore District, on or before noon on the 7th February 1881, when they will be opened in the presence of the applicants. The applicant whose tender may be selected by the Deputy Commissioner for recommendation to the Chief Commissioner, will be required to deposit at once, in cash or in Government securities, a further sum equal to one-twelfth (or one month's instalment) of the amount of the annual rent tendered, failing which the deposit made with the tender will be forfeited.

4. When the decision of the Chief Commissioner is announced, the deposits made by applicants whose tenders have been rejected will be thereupon returned to them on their application. The Chief Commissioner reserves to himself the power of rejecting the highest or any tender without assigning any reason.

5. The party whose tender may be accepted shall, within eight days after the Chief Commissioner's decision has been communicated to him, deposit with the Deputy Commissioner a sum, in cash or Government securities duly endorsed, which, with the sums previously deposited under para 3, shall be equal to one-fourth of the amount of the annual rent tendered, and shall execute an agreement in the usual form on proper stamp, binding himself to conform to the conditions hereinafter set forth, and if he fails or refuses to sign the agreement or to make the deposit required, the deposits already made will be forfeited to Government and the lease otherwise disposed of.

Conditions.

I. The annual contract amount shall be paid by monthly instalments, together with the prescribed local cess of one anna on every rupee, computed on such contract amount, into the District Treasury, on or before the 5th of the month following that for which the payment is due; and interest at the rate of 6 per cent per annum shall be paid on all arrears left outstanding on that date. Such arrears shall, if they remain unpaid after the lapse of the month in which they are payable, be recoverable by attachment and sale of the property of the lessee in the manner prescribed by existing rules for the recovery of arrears of land revenue, and it shall be at the discretion of the Deputy Commissioner, with the Chief Commissioner's sanction, to declare the lease cancelled, and to resell or retain it under Government management and to recover all outstanding arrears with interest, and any losses which may result from such resale or disposal of the contract, by confiscation of the sum deposited, and, if necessary, by attachment and sale of the property of the defaulter, under the rules in force for the recovery of arrears of land revenue.

II. The usual licenses to retail vendors will be issued by the Deputy Commissioner, and no alteration shall be made by the lessee in the locality or number of the retail shops now opened for sale of toddy, without the express sanction of the Deputy Commissioner. The Deputy Commissioner is competent to order any shops to be closed on grounds of public expediency.

III. Grain, goods, ornaments, wearing apparel or other property should not be received in barter or pawn for toddy.

IV. The lessee shall be required to conform to any additional rules which may be prescribed from time to time by the Chief Commissioner.

V. No interference shall be made by the lessee with the rights, as already ascertained and defined, of the holders of jodi, sarvamanyam and kayamgutta villages, who are authorized by the sannad, &c., to exercise such rights within the limits of their villages Disputes regarding such rights will be decided by the Deputy Commissioner of the District, and the lessee shall be bound by such decision, which shall be subject however to the confirmation or otherwise, on appeal, of the Chief Commissioner.

VI. No toddy shops shall be opened before 6 A. M., and all shops shall be closed at 9 P. M.

VII. All shops for the sale of toddy on or adjacent to the line of march shall be closed while a Regiment or Detachment of European soldiers is passing by, or during its temporary halt in the vicinity, and no compensation shall be claimable for loss alleged to have occurred or to have been occasioned thereby, and it shall be lawful for such troops to have their own abkari contractor, without claiming any compensation on that account.

VIII. The lessee will be allowed the use of the date trees growing on Government waste land in the District for the extraction of toddy either for sale within the Province or for manufacture into jaggory, but he will have no claims to date trees situated in lands which are now or may hereafter be occupied for cultivation or for other purposes, nor to compensation on account of any date trees or topes, which the Government may, at any time, consider necessary to reserve for other purposes, or for the supply of toddy to other Districts.

IX. The lessee will have no claims to compensation or remission on account of any arrangements which may be made by Government in regard to beer or other descriptions of liquor or spirit than toddy. The Chief Commissioner reserves to himself the power to terminate the lease as regards any part of the District on public grounds, awarding a reasonable compensation for the same.

X. No toddy shall be knowingly sold or given to any European soldier, sailor, European or Eurasian woman or child, or to a sepoy or policeman when on duty, and any breach of this rule shall render the lessee or the vendor severally or jointly liable to the payment of a penalty of Rs. 50 for the first offence, and one-hundred rupees for every subsequent offence, as well as for the cancelment of the vendor's license.

XI. The lessee shall be responsible that his servants or agents are prevented from extracting toddy from young immature date trees, the trunks of which are less than one yard in height from the ground to the springing of the branches, nor shall any leaves be cut from such trees, and any breach of these rules shall render the lessee liable to the payment of a penalty of Rs. 50 for the first offence, and Rs. 100 for every subsequent offence.

XII. The rates at which toddy shall be sold to the public and bakers shall be as follows :—

	Maximum. Prices per Seer.			Minimum. Prices per Seer.			Fixed Price per Seer for Bakers.		
	Rs.	A.	P.	Rs.	A.	P.	Rs.	A.	P.
In Cantonment and Pettah of Bangalore..	0	1	6	0	1	0	0	0	5
In the Kasbas of Taluks of the Bangalore District ..	0	1	3	0	0	10			
In the Villages of do. ..	0	1	0	0	0	8			

6. Information in regard to the past revenue and any other matters can be had on application at the Deputy Commissioner's Office.

By Order,

C. RANGACHARLU,
Revenue Secretary.

Notifications, &c., by the Government of India.

FOREIGN DEPARTMENT.

JUDICIAL.

No. 196 I. J.

NOTIFICATION.

Fort William, the 14th December 1880.

His Excellency the Viceroy and Governor General in Council is pleased to sanction, with effect from the 1st January 1881, the addition to Section 185 of the Bangalore Municipal Regulations, after the words "from which any offensive or unwholesome smell arises," of the words "or as a gunpowder manufactory, manufactory of fireworks, place of storing explosive or combustible materials, or of any place which is used for any purposes which are calculated to be dangerous to life, health or property."

A. C. LYALL,
Secy. to the Govt. of India.

THE

MYSORE GAZETTE.

Published by Authority.

BANGALORE, SATURDAY, JULY 3, 1880.

☞ Separate paging is given to this Part in order that it may be filed as a separate compilation.

PART II.

Notifications by the Judicial Commissioner, &c.

JUDICIAL DEPARTMENT.

IN THE COURT OF THE JUDICIAL COMMISSIONER OF MYSORE & COORG.

Criminal Side.

Rule of Practice No. 21, *dated* 22*nd June* 1880.

Under Section 292 of the Code of Criminal Procedure, and with the concurrence of the Chief Commissioner, the Officiating Judicial Commissioner has framed and issues the following Rule to regulate the charge for copies made for parties to Criminal Proceedings :—

1. The Judge is to license as many Copyists as may be required for the purpose of supplying all applicants with copies without inconvenient delay, and no one but a licensed Copyist is to be employed in the preparation of copies.

2. The authorized rates will be as follows :—

Copyist's fee 1 anna 6 pies for every 100 English words.
Examiner's fee 4 pies for every 100 English words.
Copyist's fee 1 anna for every 100 Vernacular words.
Examiner's fee 2 pies for every 100 Vernacular words.

Four figures will count as one word.

3. The Copyist shall on each copy note the number of words and the amount of the fee received by him as follows :—

Number of words.
Amount.
Received payment.
A. B.
Licensed Copyist.

4. Each Copyist should keep a Register shewing his receipts which he is to submit once a month to the Judge, to be initialled and that he may regulate the establishment of Copyists with reference to the work in his Court.

5. The duty of examining copies should be entrusted to the Head Clerk or Sheristadar in the superior Courts, and to the Munshi in the Amildar's Courts, but the Judge may make any other suitable arrangement except that the Copyists will not be allowed to examine for each other.

NOTIFICATIONS.

The 16th June 1880.

The undermentioned gentleman has been enrolled as a 1st Grade Pleader in the Courts of Coorg, under the Rules of 23rd December 1879 :—

Mr. J. W. Hayes (Junior).

The 22nd June 1880.

The undermentioned gentleman has been enrolled as an Advocate in the Court of the Judicial Commissioner of Mysore, under the Rules of 18th February 1879 :—

Mr. Pasumurti V. Kristnasami Chetti.

The 22nd June 1880.

The undermentioned person has been enrolled as 1st Grade Pleader in the Courts of Mysore, under the Rules of 18th February 1879 :—

Melkote Cumara Alasingarachari.. Proposing to practise in the Courts of the Nundydroog Division.

The 23rd June 1880.

The undermentioned person has been enrolled as 2nd Grade Pleader in the Courts of Coorg, under the Rules of 23rd December 1879 :—

K. Santappaiya. .. Practising in the Courts of Coorg.

The 24th June 1880.

The undermentioned person has been enrolled as 2nd Grade Pleader in the Courts of Mysore, under the Rules of 18th February 1879 :—

179. T. Parthasarthaiengar .. Proposing to practise in the Courts of the Nundydroog Division.

The 29th June 1880.

The undermentioned persons have been enrolled as 2nd Grade Pleaders in the Courts of Mysore, under the Rules of 18th February 1879 :—

Nos.	Names.	Where practising at present.
180.	Koppada Lakshmanaiya	.. Proposing to practise in the Courts of the Nagar Division.
181.	Banavasi Venkat Rao	.. Do. do.
182.	Haladipur Nagappa	.. Do. do.

A. C. HAY,
Offg. Judicial Commissioner.

POLICE DEPARTMENT.

NOTIFICATION.

The 1st July 1880.

Statement of Rewards sanctioned by the Chief Commissioner, for good conduct :—

District.	Name, &c.,	Amount.	Particulars of good service.
Shimoga ...	Isvarappa, Ex-Peon of the Forest Department.	Rs. 25.	For meritorious service rendered in detecting a sandalwood theft case. Recommended by the Deputy Commissioner.

By Order,

W. J. CUNINGHAM,
Secretary.

195

INAM DEPARTMENT.

NOTIFICATION.

No. 2. *The* 18*th June* 1880.

Statement shewing the number of title-deeds cancelled and the reason therefor during the quarter ending 31st March 1880 :—

Taluk.	Name of Village.	Name of Inamdar.	Description of Inam.	Particulars. Description of land.	Extent in acres.	Extent in khandis.	Assessment.	Jodi.	Combined Quit-rent.	Cash Payment.	Title-Deed No.	Why cancelled.	Remarks.
				Wet Nos. 345, 346, 347, 348, and 349.	A. C.	K.C. P.				Rs. As. P.			
Kadur ...	Patnagere ...	Kadur Kasba Rama Bhatta	Tope.		10 30	0 0 0	17 13 3	8 14 7	8 15 0	0 0 0	72	Relinquished.	
Chikmagalur..	Kallasettihalli.	The Managers for the time being of the Pagoda of Basavanna Devar at Kallasettihalli.	Devadaya.	Dry 16		0 2 0	3 12 7	1 14 6	212 0	...	44827		
Kavaledurga.	Ballagatta ...	Do of Ballagatta Sankara Devar at Chittemuttur.		...	...	...	...	...	...	5 0 0	231 37247	Resumed as services are not rendered.	

R. A. COLE,
Supt. of Inam Settlements.

MEDICAL DEPARTMENT.

Deaths registered from different Causes in the Provinces of Mysore and Coorg during the months of November and December 1879.

November 1879.

Division.	NAME OF DISTRICT.	Population according to Census of 1871.			Total Deaths from all Causes.			Ratio of Deaths per cent. of Population from all Causes.			Number of Births registered.		
		Males.	Females.	Total.	M.	F.	Total.	M.	F.	Total.	M.	F.	Total.
Nundydroog.	Bangalore District ...	414,543	413,811	828,354	428	439	867	·10	·10	·10	559	527	1,086
	Kolar do ...	309,685	309,269	618,954	386	366	752	·12	·12	·12	337	340	677
	Túmkúr do ...	315,440	316,799	632,239	374	366	740	·12	·12	·12	270	221	491
	Total of the Division...	1,039,668	1,039,879	2,079,547	1,188	1,171	2,359	·11	·11	·11	1,166	1,088	2,254
Ashtagram.	Mysore District ...	467,562	475,625	943,187	682	527	1,209	·15	·11	·13	529	516	1,054
	Hassan do ...	313,683	326,194	639,877	432	348	780	·14	·10	·12	353	345	698
	Total of the Division...	781,245	801,819	1,583,064	1,114	875	1,989	·14	·11	·13	882	861	1,743
Nagar.	Shimoga District ...	258,446	240,530	498,976	577	534	1,111	·22	·22	·22	447	403	850
	Kadur do ...	184,978	177,487	362,465	268	214	482	·14	·12	·13	233	209	442
	Chitaldroog do ...	271,557	259,773	531,360	354	315	669	·13	·12	·13	323	262	585
	Total of the Division ...	715,011	677,790	1,392,801	1,199	1,063	2,262	·17	·15	·16	1,003	874	1,877
	Total of the Province...	2,535,924	2,519,488	5,055,412	3,501	3,109	6,610	·14	·12	·13	3,051	2,823	5,874
	Coorg ...	94,454	73,858	168,312	129	101	230	·14	·14	·14	71	49	120

December 1879.

Division.	Name of District.	Population according to Census of 1871.			Total Deaths from all Causes.			Ratio of Deaths per cent of Population from all Causes.			Number of Births registered.		
		Males.	Females.	Total.	M.	F.	Total.	M.	F.	Total.	M.	F.	Total.
Nundydroog.	Bangalore District... ...	414,543	413,811	828,354	553	546	1,099	·13	·13	·13	657	627	1,284
	Kolar do	309,685	309,269	618,954	437	422	859	·14	·14	·14	306	294	600
	Túmkúr do	315,440	316,799	632,239	451	355	806	·14	·11	·13	248	197	445
	Total of the Division...	1,039,668	1,039,879	2,079,547	1,441	1,323	2,764	·14	·13	·13	1,211	1,118	2,329
Ashtagram.	Mysore District	467,562	475,625	943,187	665	586	1,251	·14	·12	·13	621	569	1,190
	Hassan do	313,683	326,194	639,877	487	363	850	·16	·12	·13	404	374	778
	Total of the Division...	781,245	801,819	1,583,064	1,152	949	2,101	·15	·12	·13	1,025	943	1,968
Nagar.	Shimoga District	258,446	240,530	498,976	684	600	1,284	·27	·25	·26	470	386	856
	Kadur do	184,978	177,487	362,465	346	277	623	·18	·16	·17	206	225	431
	Chitaldroog do	271,587	259,773	531,360	419	372	791	·15	·14	·15	295	231	526
	Total of the Division...	715,011	677,790	1,392,801	1,449	1,249	2,698	·20	·18	·19	971	842	1,813
	Total of the Province...	2,535,924	2,519,488	5,055,412	4,042	3,521	7,563	·16	·14	·15	3,207	2,903	6,110
	Coorg...	94,454	73,858	168,312	142	101	243	·15	·14	·14	59	55	114

J. HOUSTON, M. D.,
Surgeon to the Mysore Commission.

BANGALORE MUNICIPALITY.

No. 5. *The* 29*th June* 1880.

Proceedings of an Ordinary Meeting of the Cantonment Municipal Commission held at their Office Premises No. 12, Residency Road, on Tuesday the 22nd June 1880, at 7½ A. M.

President.

Dr. J. H. Orr, C. B.—*Present.*

Ex-Officio Members.

Absent.—The Asstt. Quarter-Master Genl., M. Dn.
The Executive Engr., Nundydroog Dn.
The District Engineer.
The Dist. Superintendent of Police.
The Town and Cantt. 2nd Magistrate.

Municipal Commissioners of Divisions.

No. 1, *Alsur Division.*

Present.—Mr. P. Raju Modaliar.
Mr. V. Sadasiva Modaliar.

No. 2, *Shule Division.*

Present.—Mr. Standish Lee.

No. 3, *Arab Lines and Fort Division.*

Present.—Captain P. Curley.
Absent.—Mr. Abdul Husen Saib.

No. 4, *General Bazar Division.*

Absent.—Mr. Abdul Khudus Khadri Khaji Saib.
Mr. A. R. Sabhapati Modaliar.
Mr. Mahomed Saliha

No. 5, *Blackpalli Division.*

Present.—Mr. B. Ramalingam.
Mr. T. T. Leonard.

No. 6, *High Ground Division.*

Present.—Major-General C. G. Ottley.
Absent.—Mr. G. G. Brown.

Statement of Accounts.

1. The Progress Report, Account Current, Statement of Cash Balance and Assessor's Accounts for May 1880, together with the Mortuary Report for the same period, are submitted and after examination are adopted :—

Receipts.	Amount.		
I. Octroi.... Class 1. Articles of food or drink for men or animals or duty on dry and green cocoanuts ...	370	4	11
,, 2. Animals for slaughter	...	...	...
,, 3. Fuel, lighting and washing	...	...	...
,, 4. Building materials	22	3	0
,, 5. Drugs, spices and gums	...	...	...
,, 6. Tobacco and betel leaves	2,812	4	9
,, 7. Cloth	...	...	...
,, 8. Metals	...	...	...
II. Tax on houses, buildings or lands	681	8	5
III. Tax on professions and trades or collections of liquor license fees...	986	10	8
IV. Tax on carriages, horses, &c.	...	...	...
V. Tolls on carts, carriages, &c.	...	...	...
VI. Special taxes under Section II, Act VI of 1868—Conservancy ...	...	...	...
VII. Rents ... 1. Nazul lands	59	9	7
2. Do shops	436	15	0
3. Serais	...	...	...
4. Confiscated lands	...	...	...
5. Compound or site tax	...	...	...
VIII. Gardens	...	...	..
IX. Extra-ordinary. 1. Sale of houses and lands	...	...	..
2. Loans	...	...	...
3. Refunds and recoveries	...	...	...
4. Interest on securities and loans	...	...	...
5. Other Items	...	..	...
X. Fines	26	14	0
XI. Pounds	81	6	0
XII. Miscellaneous	920	7	6
XIII. Transfers and Contributions—Received from the Executive Engineer, Bangalore Division, on account of grant-in-aid for repairing suburban roads	488	14	2
Total Rupees.....	6,887	2	0
To Cash Balance brought forward from last month's accounts.....	6,905	5	2
Total Rupees.....	13,792	7	2

Expenditure.	Amount.		
I. Collections... 1. For Octroi tax	427	12	5
2. ,, Tax on houses, buildings and lands ...	366	8	0
3. ,, Tax on professions and trades ...	10	0	0
4. ,, Tax on carriages, horses, &c. ...	..	...	..
5. ,, Tolls on carts and other vehicles ...	...	...	...
6. Special taxes	...	...	...
7. Rents assigned to Municipality ...	134	13	0
II. Head Office Charges	714	13	8
III. Public Works. 1. Supervision	495	13	6
2. *a.* Original Works	97	0	6
b. Purchase of land	...	...	...
c. Compensation for houses, &c. ...	...	...	...
3. Repairs	1,731	8	3
IV. Police	1,140	1	4
V. Education	...	...	...
VI. Charitable Grants. 1. Dispensary and Medical Charges ...	...	...	...
2. Vaccination	20	0	0
3. Asylums	...	...	...
VII. Conservancy	1,705	12	11
VIII. Road watering	92	11	4
IX. Lighting	639	11	6
X. Gardens ... 1. Public Gardens	...	...	..
2. Nursery	7	0	0
3. Farms	...	...	...
XI. Extraordinary... 1. Museums and Institutes ...	...	...	...
2. Purchase of Government Notes ...	...	...	...
3. Fairs and Exhibitions	...	..	...
XII. Miscellaneous .. 1. Repayment of loans	...	...	...
2. Refund of excess collections ...	...	...	...
3. Cattle Pound charges	93	0	7
4. Statistics and mortuary registration ...	94	8	3
5. Other miscellaneous items ...	217	13	10
XIII. Reserve	...	...	...
Total Rupees.....	7,989	1	1
To Cash Balance carried to next month's accounts.....	5,803	6	1
Total Rupees.....	13,792	7	2

Resolution.—Approved.

Mortuary Register, Bangalore.

2. Statement of Births and Deaths within Cantonment Municipal limits during the month of May 1880.

Causes of Deaths.	Europeans.		East Indians.		Musalmans.		Hindus.		Native Christians.		Other Classes.		Buddhists.		Total.		Total in—		Difference.	
	M.	F.	M.	F.	M.	F.	M.	F.	M.	F.	M.	F.	M.	F.	M.	F.	May 1880.	April 1880.	Increase.	Decrease.
Cholera ...	...	...	...	...	...	...	...	...	...	...	...	...	...	...	...	...	...	...	...	...
Small-pox ...	...	...	...	...	...	...	...	...	...	...	...	...	...	...	...	...	...	...	...	...
Fevers... ...	...	...	...	...	...	5	12	4	2	1	...	...	...	...	14	10	24	21	3	...
Bowel-complaints ...	...	1	2	...	1	...	7	6	...	...	...	...	...	...	10	7	17	11	6	...
Suicide ...	...	...	...	...	...	...	...	...	...	...	...	...	...	...	...	...	...	...	...	...
Wounding ...	...	...	...	...	...	...	...	...	...	...	...	...	...	...	...	...	...	...	...	...
Accidents ...	...	...	...	...	1	...	1	1	...	...	...	...	...	...	2	1	3	3	...	...
Snake-bite or killed by wild beasts...	...	...	...	...	...	...	...	...	...	...	...	...	...	...	...	...	...	...	...	...
Other Causes—																				
Old age ...	...	...	...	...	...	1	1	4	...	1	...	...	...	...	1	6	7	...	...	...
Consumption ...	...	...	...	...	1	...	1	2	1	1	...	...	...	...	3	3	6	...	...	...
Lock-jaw ...	...	...	...	...	1	1	1	1	...	...	...	...	...	...	2	2	4	...	...	...
Fits by child birth	...	...	...	...	...	1	...	...	...	...	...	...	...	...	...	1	1	...	...	...
Dropsy ...	...	...	...	...	...	1	...	...	...	...	...	...	...	...	...	1	1	...	...	...
Pneumonia ...	...	...	...	...	...	...	2	...	...	...	...	...	...	...	2	...	2	...	...	...
Peritonitis ...	...	...	...	...	...	1	1	...	...	...	...	...	...	...	1	1	2	...	...	...
Paralysis ...	...	...	...	...	...	...	1	...	...	...	...	...	...	...	1	...	1	...	...	...
Cough ...	...	...	...	...	...	...	2	...	...	...	...	...	...	...	2	...	2	...	...	...
Premature birth	...	...	...	...	...	...	...	1	...	...	...	...	...	...	...	1	1	...	...	...
Debility ...	...	...	...	...	...	1	...	1	...	...	...	...	...	...	...	2	2	...	...	...
Still-born ...	...	...	...	...	...	2	...	3	...	...	...	...	...	...	...	5	5	...	...	...
Convulsions ...	1	1	1	...	...	...	3	2	...	1	...	...	...	...	5	4	9	...	...	...
Dentition ...	...	...	...	...	...	1	3	2	...	...	...	...	...	...	3	3	6	...	...	...
Heart disease ...	...	...	...	...	1	...	1	1	...	...	...	...	...	...	2	1	3	...	...	...
Abscess ...	...	...	...	...	1	...	...	...	1	...	...	...	...	...	2	...	2	...	...	...
Bronchitis ...	1	...	...	...	...	...	...	...	...	...	...	...	...	...	1	...	1	...	...	...
Total Other Causes.....	2	1	1	...	4	9	16	17	2	3	...	...	...	...	25	30	55	68	...	13
Total Deaths.....	2	2	3	...	6	14	36	28	4	4	...	...	...	...	51	48	99	103	9	13
Total Births during the month...	1	3	5	...	22	15	37	42	7	9	...	...	...	...	72	69	141	179	...	38

Abstract of Mortuary Report and Percentage of Births and Deaths on the estimated Population, 78,176.

Classes.	Births.		Difference.		Percentage of Births.		Deaths.		Difference.		Percentage of Deaths.	
	April 1880.	May 1880.	Increase.	Decrease.	April 1880.	May 1880.	April 1880.	May 1880.	Increase.	Decrease.	April 1880.	May 1880.
Europeans ...	10	4	...	6	·24	·09	8	4	...	4	·19	·09
East Indians ...	6	5	...	1	·24	·20	3	3	...	...	·12	·12
Musalmáns	26	37	11	...	·17	·24	17	20	3	...	·11	·13
Hindus ...	112	79	...	33	·22	·15	63	64	1	...	·12	·12
Native Christians	25	16	...	9	·34	·21	12	8	...	4	·16	·10
Buddhists ...	...	...	...	...	...	...	...	...	...	...	...	...
Other Classes ...	...	...	...	...	...	...	...	...	...	...	...	...
Total.....	179	141	11	49	·22	·18	103	99	4	8	·13	·12

REMARKS.

There were 99 deaths during the month; 24 from fevers, 17 from bowel-complaints, 3 from accidents and 55 from other causes as detailed in the previous page.

The number of deaths in May 1880 as compared with those in April 1880 and the corresponding month of last year were as follows :—

Of Europeans 4 against 8, Eurasians 3 against 3, Musalmáns 20 against 17, Hindus 64 against 63, and Native Christians 8 against 12, being 4 less than previous month, and 13 below the total number of deaths registered in the corresponding month of last year.

Ages.

Classes.	No. died during the month.	Under 1 year.	1 to 6 years.	6 to 12 do.	12 to 20 do.	21 to 30 do.	31 to 40 do.	41 to 50 do.	51 to 60 do.	Above 60 do.	Total.
Europeans ...	4	3	1	...	...	...	...	...	...	...	4
East Indians ...	3	1	2	...	...	..	...	...	...	...	3
Musalmáns ...	20	8	...	1	2	5	1	...	1	2	20
Hindus ...	64	19	8	2	5	6	5	9	3	7	64
Native Christians.	8	2	2	...	1	1	...	...	1	1	8
Buddhists ...	...	...	...	...	...	...	...	...	...	...	..
Other Classes ...	...	...	...	...	...	...	...	...	...	...	...
Total.....	99	33	13	3	8	12	6	9	5	10	99

Resolution.—Approved.

List of Agreements entered into by the President.

3. List of agreements entered into by the President during the month of May 1880 :—

No.	Subject.
1	Agreement executed by Iranna for supplying gravel for roads.
2	Do by Kodappa for constructing a Box-drain at A. No. 1 Street, Blackpalli.
3	Do by Appanna for do do at Chandi Chauk Street.
4	Do by Appanna for do do at north of the Police Lines, Blackpalli.
5	Do by Chaudri Mahomed Husen for constructing V Section Drains in Cantonment.
6	Do by Raju Modaliar and Chinnasami Naidu for constructing a Box Drain in Sultanji Gunta road.
7	Do by Mr. C.—Ashworth for the extension of Main Sewer in Palm Road, Shule.

Resolution.—Approved.

J. H. ORR,
President, Cantonment Munl. Commn.

TUMKUR DISTRICT.

NOTICE OF SALES OF JODI VILLAGES.

The 14th June 1880.

1. It is hereby notified that the jodi inam villages of the Túmkúr Taluk in the Túmkúr District, (hereunder more fully described), which have been duly attached for arrears of quit-rent and local cesses due to Government by the jodidars, will be sold by public auction at the Deputy Commissioner's Office at Túmkúr on the 31st August 1880 before the Deputy Commissioner of Túmkúr District. The sale will commence at 11 A. M. on that date and be knocked down to the highest bidder at 5 P. M. on the same day.

2. Provided that when a village is divided into separate recognized vrittis, the Deputy Commissioner may at his option, instead of selling the village as a whole, sell each vritti separately.

3. The annual quit-rent (excluding irrigation and local cesses) payable by the purchaser on the jodi villages in question is shewn in detail in the statement at foot.

4. Purchasers will be required to deposit 25 per cent of the purchase money at the time of the sale, and where the remainder of the purchase money may not be paid within 15 days from the day of sale, the money so deposited shall be liable to forfeiture.

5. When such deposit shall not be made or when the remaining purchase money shall not be paid within 15 days of the day of sale, the property in question will be re-sold at the expense and risk of the first purchaser.

6. Persons bidding at a sale may be required to state whether they bid on their own account or as agents, and in the latter case to deposit a written authority signed by their principals, otherwise their bids may be rejected.

7. The sale shall be stayed, if the defaulter or any person acting in his behalf, or claiming an interest in the property, tenders the full amount of the arrears of revenue with the interest and other charges, provided such tender be made before sunset on the day previous to that appointed for the sale.

8. Purchasers having completed the payment of the purchase money will be placed in immediate possession, and the village will be registered in the name of the purchaser, and a certificate of sale signed and sealed by the Deputy Commissioner will be granted to him. It is to be distinctly understood that the Government are not responsible for errors of description or in estimated extent or income.

9. Provided that parties deeming themselves aggrieved by the sale shall be at liberty to apply to the Deputy Commissioner within thirty days from the day of sale, and the purchase shall be conditional on the final order in such application.

Taluk.	Village.	Names of Jodidars.	Description of the Village.	Estimated Extent.	Estimated Gross Rental or Beriz.	Quit-Rent payable to Government.	Arrears of Government Revenue including Local Cesses for which the Village is to be sold.			
							Years.	Amount.		
Túmkúr.	Mursarahalli.	Holavanahalli Ramachari and 3 others.	Jodi village situated in the Urdigere Hobli, bounded on the east Puttasandar and Virapur villages, west Jayamangali river, north Lakshimipur, south Doddanahalli and Bavanahalli.	A. 280—C. 0	117—6—4.	28—0—0.	Dhatu ...	32	6	8
							Iswara ...	37	0	8
							Bahudhanya	17	8	8
							Pramadi ...	39	14	4
							Total.....	126	14	4

Taluk.	Village.	Names of Jodidars.	Description of the Village.	Estimated Extent.	Estimated Gross Rental or Beriz.	Quit-Rent payable to Government.	Arrears of Government Revenue including Local Cesses for which the Village is to be sold. Years.	Amount.		
Tumkúr.	Chinvarnahalli Ahobala Agrahara jodi village.	Shankar Shastri and 10 others.	Jodi village situated in the Kora Hobli, bounded on the east Jakkanahalli village, west Kodatagal, north Beladara, south Chinga.	A. 739 C. 53.	400—0—0.	62—0—0.	Dhatu ...	55	4	4
							Iswara ...	29	0	6
							Bahudhanya.	31	14	0
							Pramadi ...	19	8	2
							Total...	135	11	0
	Hosur jodi village.	Chikka Subbanna and others.	Jodi village situated in the Gulur Hobli, bounded on the east Manangi village, west Gulur, north do, south Amrut Mahal Kaval.	A. 252 C. 49.	200—0—0.	108—0—0.	Dhatu ...	81	13	8
							Iswara ...	121	5	0
							Bahudhanya	46	8	6
							Pramadi ...	58	10	10
							Total.. ...	308	6	0
	Gangarsandra jodi village.	Tamnachari and 5 others.	Jodi village situated in the Gulur Hobli, bounded on the east Honnanahalli village and Guddanapalya, west Kitaganahalli, north Palsandra, south Honnanahalli and Amrut Mahal Kaval.	A. 112 C. 30.	79—5—2.	40	Dhatu ...	25	9	10
							Iswara ...	45	9	10
							Bahudhanya	45	9	10
							Pramadi ...	46	14	10
							Total.....	163	12	4

K. SESHADRI IYER,
Dy. Commr.

HASSAN DISTRICT.

NOTIFICATION.

The 15th June 1880.

Descriptive roll of 5 under-trial prisoners, who escaped from the Hassan District Jail, about 12 P. M. on the night of the 5th May 1880:—

1. *Register No.*—45, *Name and Father's Name*—Bairegauda, son of Junjegauda. *Place of Residence*—Manjarabad Taluk, Agane. *Caste and Profession*—Sivachar, ryot. *Age*—About 35 years. *Crime*—Charged with the offence of kidnapping, under Section 366 of the Indian Penal Code.

A reward of Rs. 25 is offered for the prisoner's recapture.

2. *Register No.*—46, *Name and Father's Name*—Mallegauda, son of Puttegauda. *Place of Residence*—Agane, Manjarabad Taluk. *Caste and Profession*—Sivachar, ryot. *Age*—About 25 years. *Crime*—Charged with the offence of kidnapping, under Section 366 of the Indian Penal Code.

A reward of Rs. 25 is offered for the prisoner's recapture.

3. *Register No.*—47, *Name and Father's Name*—Puttegauda, son of Puttegauda. *Place of Residence*—Agane, Manjarabad Taluk. *Caste and Profession*—Sivachar, ryot. *Age*—About 35 years. *Crime*—Charged with the offence of kidnapping, under Section 366 of the Indian Penal Code.

A reward of Rs. 25 is offered for the prisoner's recapture.

4. *Register No.*—49, *Name and Father's Name.*—Chipara, son of Bairasa. *Place of Residence*—Jambadi, Manjarabad Taluk. *Caste and Profession*—Billar, ryot. *Age*—About 32 years. *Crime*—Charged with the offence of kidnapping, under Section 366 of the Indian Penal Code.

A reward of Rs. 25 is offered for the prisoner's recapture.

5. *Register No.*—67, *Name and Father's Name*—Ramegauda, son of Ramegauda. *Place of Residence*—Manjarabad. *Caste and Profession*—Sivachar, ryot. *Age*—About 40 years. *Crime*—Charged with the offence of kidnapping, under Section 366 of the Indian Penal Code.

A reward of Rs. 25 is offered for the prisoner's recapture or Rs. 125 for the recapture of the above mentioned under-trial prisoners.

W. J. LINCOLN,
Superintendent, Hassan Jail.

KADUR DISTRICT.

IN THE COURT OF THE SUBORDINATE JUDGE OF THE KADUR DISTRICT.

O. S. No. 199 *of* 1879.

Execution Case No. 223 *of* 1879.

Baligar Kallamma .. .. Plaintiff.

By Pleader B. Gundappa.

Versus.

1. Syed Takhi Ali Huseni, *alias* Husen Pira.
2. Syed Bandan Raj Huseni *alias* Gesund Raj, } sons of Rai Vellore Murshat Pira Sahib.. Defendants.

In execution of a decree of the Subordinate Judge's Court, Kadur District, in the above cause dated the 2nd day of December 1879, in virtue whereof a sum of Rs. 1,346—8—0 was adjudged to be payable by the said defendants unto the said plaintiff, and of a warrant dated the 9th day of June 1880 for giving effect to the said decree by sale of property attached thereunder, notice is hereby given that on the 14th day of July 1880 at 11 noon, the Nazir of this Court or other person appointed, will, at Chikmagalur before this Court, sell by auction to the highest bidder and without reserve, the right, title and interest of the said defendants in the several articles of immovable property hereunder specified and every power of disposing of the same or any of them or of the profits arising therefrom which the said defendants may now consistently with the law exercise for their own benefit.

1	2	3	4	5	6	7	8	9
Lot No.	Situation of Property.	Description of lot including all particulars described in Amin's report.	Survey No., Municipal No., or other fiscal designation.	Government revenue including Local Cess, any other known fiscal charges resting on the lot and shewing any arrears due.	Present occupant, if known.	Mortgage or lien subject to which attachment has been continued and sale is to be made under Sections 282 and 295 of the Code of Civil Procedure.	Lists of rights, charges and claims to which the lot is supposed to be liable after enquiry under Section 287 of the Code of Civil Procedure and Rules made thereunder by the High Court.	List of claims to raise attachment rejected wholly or in part under Section 278 of the Code of Civil Procedure.
1	"Mottekallu Jangali" in the village of Jamanhalli, Lingadahalli Magani, attached to the Sub-Registration District, Tarikere Taluk.	"Mottekallu Jangali" *alias* "Abbikhan Bund Tota" covered by a patta in the name of Mr. Ross Porter, who sold it to Rai Vellore Abdul Rahiman Saib from whom defendants purchased it for Rs. 2,500, on the 9th July 1878. The land measures 220 acres, 17 guntas and 91 yards and is bounded on the east by a stone marked A on a mound called "Kodgallu Dinne" eastward of the path leading to "Mottekallu" and a stone marked B on a stone mound called "Kalludinne" higher up the "Gangolegiri;" West by a stone E on the top of a sloping hill called "Mallekallu Yenu Gudda" and stone F at "Sanna Mitti" or high ground northward of Malekal Yenu"; North by stone G on a high ground above "Abbihalla" straightly eastward of "Haddinkatte" and a stone H on the hill near the slope "Ilijaru" by the path going to "Mottekallu" forming last boundary of Kimanagundi": and— South by stone C on a mound above "Batavinakan" jungle lying down westward of "Nagari Buruz" and a stone D near "Kariyannan Tittina Kallubana" on the hill westward of "Nagari Buruz": (*a*) A portion of a space of 200,000 coffee trees is alleged to have been leased to the son of Suryanarnappa on $\frac{1}{8}$ (or Panchar) shikmi tenure. The coffee garden mortgaged to Shikarpur Subba Rao by defendants for Rs. 3,000 and odd.	Patta No. 259, dated 8th April 1869, granted by the Chief Commissioner.	...	No mention is made in Amin's report.	Shikarpur Subba Rao to whom the defendants mortgaged the property for Rs. 7,730 under a deed, dated the 9th July 1878, transferred his right therein to Abdul Rahiman Saib by a deed of sale, dated the 24th October 1879. The latter claims Rs. 4,000 as due to him on the liability of the property.	Debt of Rs. 4,000 claimed by Abdul Rahiman Saib as mentioned in column 7.	Suryanarnappa, the alleged Shikmidar (*vide* column 3) has not appeared though served with due notice.

T. RAGHAVENDRA RAO,
Offg. Subordinate Judge.

COO

NOTIFI-

The 28th June

Notice is hereby given for general information that the Government dues on the undermentioned rice lands at Mercara at noon on Wednesday 25th

No.	Nad.	Village.	Name of Defaulter.	Description of Holdings.	Extent.	Assessment due for 1876—77. Land Tax.			House Tax.			Dhuli Paddy.			School Cess.			Total.			Assessment due Land Tax.			House Tax.			Dhuli Paddy.		
	Mercara Taluk.																												
	Wulugulimudigerinad	Hadre ...	Kali, wife of Boyi Channa.	A portion of Basavannadevara jodi warga.	50	2	8	0	0	9	8	1	9	8	0	1	6	4	12	10	2	8	0	0	9	8	1	9	8
	Yedenalknad Taluk.																												
	Yedenalknad ...	Maldare ..	Yedagai Narasana Kala.	Nilattevada warga ...	51½	...	...	...	...	...	...	...	...	...	...	...	...	...	...	...	5	2	0	0	9	8	3	3	4
	Do ...	Do ...	Badaga Yeravara Devi.	Nilampalitevada warga 136¼ Halegadde warga 46¼	182½	...	...	...	...	...	...	...	...	...	...	...	...	...	...	...	18	4	0	0	9	8	3	3	4
	Do ...	Do ...	Do Sidda ...	Golimarada warga 93¾ Mangetevada warga 72½	166¼	...	...	...	...	...	...	...	...	...	...	...	...	...	...	...	17	6	4	0	9	8	3	3	4
	Beppunad ...	Kotoli ...	Sivachar Channabasavaiya.	Mahadevara warga...	30	3	...	...	...	9	8	1	9	8	...	...	11	5	4	3	3	0	0	0	9	8	1	9	8
	Ammattinad ...	Channaiyanakote.	Meriyanda Bopu ...	Neralemarada hedu...	52½	...	...	...	...	...	...	...	...	...	...	...	...	...	...	...	...	...	...	...	...	...	...	...	...
	Kiggatnad Taluk.																												
	Tavalgerimurnad ...	Kutta village ...	Mapla Abdulla ...	Mekyanakatevada warga.	177½	...	...	...	...	...	...	...	...	...	...	...	...	...	...	...	16	4	0	0	9	8	3	3	4
	Nanjarajpatna Taluk.																												
	Nanjarajpatna ...	Dodbetakeri ...	V. Uduvare Nanja ...	Attimarada sarige No. 6.	4	...	...	...	...	...	...	...	...	...	...	...	...	...	...	...	6	0	0	0	9	8	...	...	...
	Yadavanad ...	Dodda Abbur ...	Sivachar Basavaraj Gauda.	Aramanetarada Nilammana kandayada and kakkemarada warga.	51¼	...	...	...	...	...	...	...	...	...	...	...	...	...	...	...	5	2	0	0	9	8	0	13	1
	Do ...	Yalakanur ...	Sivachar Kandhalli Santaiya.	Aramanetarada nandimarada warga.	91¼	...	...	...	...	...	...	...	...	...	...	...	...	...	...	...	9	2	0	0	9	8	1	7	9
	Do ...	Masagodu ...	Goldsmith Javarayi...	Nandimarada do	28¾	...	...	...	...	...	...	...	...	...	...	...	...	...	...	...	...	...	...	...	...	...	...	...	...
	Do ...	Chikka Toluru...	Sivachar Kalamma ...	Nilampali do	16¼	...	...	...	...	...	...	...	...	...	...	...	...	...	...	...	...	...	...	...	...	...	...	...	...
	Yelsavirshime Taluk.																												
	Nidtada Hobli ...	Hosagutti ...	H. Nanjappa ...	Honnemarada gadde.	Kadangal	...	...	...	...	...	...	...	...	...	...	...	...	...	...	...	...	...	...	...	...	...	...	...	...
	Do ...	Haluru ...	Carpenter Timma ...	Hunasemarada holada tundu ½ piece below the tank ¼.	Tundu ¾	...	7	...	...	...	...	...	...	...	...	...	...	...	...	...	...	...	...	...	...	...	...	...	...
	Kodli Hobli ...	Doddakudna ...	Sivachar Iramma ...	Tadasalamaradagadde.	½	...	...	...	...	...	...	...	...	...	...	...	...	...	...	...	...	...	...	...	...	...	...	...	...
	Nidtada Hobli ...	Dodali village ...	M. Bapusabi ..	Honnemaradagadde...	Kadanga¼	...	...	...	...	...	...	...	...	...	...	...	...	...	...	...	1	6	0	...	9	8	...	...	...

N. B.—The purchaser will be subject to pay the assessment for the current year, *viz.*, 1879—80, as well

Conditions of sale.—Para.—1. The highest bidder will be the purchaser subject to confirmation of sale, provided he deposit 25 per cent of the

2. The balance of the purchase money must be paid before noon of the 30th day from the date of the sale, but if that

3. Should the purchaser fail to pay the balance of the purchase money within the time fixed, the sale will be cancelled, realized by the re-sale, and in the calculation of such deficiency the deposit that has been forfeited shall not be

4. Any amount due from a defaulting purchaser may be recovered under the rules or practice in force for the recovery

5. All sales and re-sales shall be subject to confirmation by the Superintendent of Coorg, who may order any sale or within three months from the date of sale, the Superintendent of Coorg shall not have reversed the sale or re-sale,

6. In any case in which a sale or re-sale may be cancelled, the purchaser will receive back the money or deposit paid

CATIONS.

1880.

in Coorg being still unpaid, the lands will be sold by public auction at the 2nd Assistant Superintendent's Office August 1880, in view to the recovery of the outstandings.

for 1877—78.			Assessment for 1878—79.																					Boundaries.			
School Cess.		Total.	Land Tax.			House Tax.			Dhuli Pad'y.			School Cess.			Total.			Grand Total.			Process Charges.			East.	West.	North.	South.
0	1	6	4	12	10	2	8	0	0	9	8	1	10	1	0	1	6	4	13	3	14	6	11	3	0	0	Hottukere (old dry tank.)	Shamanna's 506¼ bhattis of paddy field.	Aladamarada hola, (now waste.)	Chikkegauda's Urbagala hola.
0	1	6	9	0	6	5	2	0	0	9	8	3	4	2	0	1	6	9	1	4	18	1	10	1	8	0	House site of Nilantevada warga.	Paisari hola ...	Yeravara Sidda's paddy field.	Yedagai Sanna's Ira's field.
0	5	5	22	6	5	18	4	0	0	9	8	3	4	2	0	5	5	22	7	3	44	13	8	1	8	0	Do of Nilampalitevada warga.	Do ...	Do Dola's paddy field.	Paisari jungle.
0	5	2	21	8	6	17	6	4	0	9	8	3	4	2	0	5	2	21	9	4	43	1	10	1	8	0	Do of Kolimarada warga.	Do ...	Yedagai Deva's paddy field.	Bund of Maldre tank.
0	0	11	5	4	3	3	0	0	0	9	8	1	10	1	0	0	11	5	4	8	15	13	2	3	0	0	Paisari bâne.	Bâne attached to Brahman Ishvaraiya's paddy field.	Village boundary stone.	Bâne attached to Mahadevara warga.
...	...	...	...	...	...	5	4	0	0	9	8	3	4	2	0	1	7	9	3	5	9	3	5	1	8	0	V. Kempa's paddy field.	Devamanchi large tank.	Devamanchi Anekoppa bâne.	Huruguppe paisari.
0	5	3	20	6	3	17	12	0	0	9	8	3	4	2	0	5	3	21	15	1	42	5	4	3	0	0	Doddakatevada warga.	Bâne attached to Mekyanakatevada warga and Kurutevada warga.	Bâne attached to Mekyanakatevada warga.	Nirunalada tundu.
0	1	10	6	11	6	6	0	0	0	9	8	...	...	...	0	1	10	6	11	6	13	7	0	1	8	0	Aramane kadanga.	Water course of uruguppe.	B. Ira's Aralimarada sarige No. 6.	V. Channegauda's Batagana sarige No. 7.
0	1	7	6	10	4	...	...	...	...	...	...	...	...	...	...	...	...	...	...	...	6	10	4	0	0	0	A portion of the same warga.	Kallumarati and matada stream.	Nilamma's kandaya land and nandimarada warga.	Water stream and Kadigada warga.
0	2	11	11	6	4	9	2	0	0	9	8	1	7	9	0	2	11	11	6	4	22	12	8	1	8	0	Bodanayikana marati.	Large ditch ...	Jodi land of Malingadevaru.	Goldsmith Matti's attimarada warga.
...	...	...	...	...	...	2	14	0	0	14	5	0	7	6	0	1	2	4	5	1	4	5	1	1	8	0	Dodamma's tank and paisari low land.	Paisari Kallumotte high land.	Paisari Kallumotte high land.	Baragelli Mattira paisari.
...	...	...	...	...	...	1	7	11	...	...	...	...	...	...	0	0	8	1	8	7	1	8	7	1	8	0	Bachalli stream ...	Tippaiya's Irappa's land.	Sivachar Mallikarjuna's land low land.	Paisari dinne high land.
...	...	...	...	...	...	6	8	0	0	14	5	...	...	...	0	2	0	7	8	5	7	8	5	1	8	0	Mysore boundary...	Totadakere bund...	Carpenter Timmachari's field.	Beladamarada rice field.
...	...	...	...	...	...	1	10	10	0	14	5	...	...	...	0	1	0	2	10	3	2	10	3	0	8	0	Do and Iregaudana adagadde kandaya land.	Girigauda's field and Hulli tank (Hulikere).	Half of Girigauda's field and waste land.	Backyard of Iregauda, Mallegauda and Chaudana field.
...	...	...	...	...	...	3	8	0	0	9	8	...	...	...	0	1	2	4	2	10	4	2	10	0	8	0	Siddegauda's nellimarada hola.	Barber Nanja's tadasalemarada field	Honnegauda's Konnana paddy field.	Sivarudrappana Hampaiya's rice field.
0	0	5	2	0	1	1	6	0	0	9	8	...	...	...	0	0	5	2	0	1	4	0	2	...	...	...	Mattimarada gadde.	Honnemaradagadde now waste.	Kuluvadis Nayijaminu (rent free land.)	Santamma's basarimarada gadde or field.

as Survey and other charges which may be due.
purchase money immediately, should he fail to make such deposit the lot will be put up again.
day happens to be a Sunday or holiday the payment must be made before noon on the next office day.
the deposit will be forfeited and the land may be again put up to auction. The defaulting purchaser will be liable for any deficiency in the amount reckoned. The defaulting purchaser at the first sale shall moreover have no claim to any surplus that may be realized by the re-sale.
of arrears of land revenue.
re-sale to be cancelled. The decision of the Superintendent is open to revision by the Chief Commissioner and may be modified or reversed by him. If the same shall be held to have been confirmed.
by him, but will have no claims to interest or damages.

The 28th June 1880.

Notice is hereby given for general information that the purchasers of the undermentioned estates which were sold on 18th November 1879 in satisfaction of the Government dues not having paid the purchase money, the estates will be again put up to public auction at the 2nd Assistant Superintendent's Office, at Mercará, at noon on Monday 23rd August 1880 in view to the recovery of the dues.

Survey No.	Title-Deed No.	Name of Defaulter.	Name of Estate.	Village, Nad and Taluk.	Area.	Amount for which the land was sold.			Assessment for 1879—80.			Total.			Boundaries. North.	South.	East.	West.
				Yedenalknad Taluk.														
2590	...	Chandandra Monnappa.	Pangamatu paisari ...	Chembeb liyuru in Yedenalknad	0·52	11	0	0	1	0	8	12	0	8	Mandapandra Chikka Kariyappa's jamma báne and Mandapandra Kariyappa's jamma báne.	Nanjappa's jamma báne.	Mandapandra Kariyappa's jamma báne.	Mandapandra Chikka Kariyappa's jamma báne.
2321	...	Kongandra Ganapati.	Mullatodu do ...	Siddapura do ...	0·91	1	4	0	1	13	1	3	1	1	Mr. Hunt's Mullatodu paisari coffee estate.	No. 2314, Vellalra Appasami Pille's Mullatodu paisari coffee estate and Mullatodu paisari jaga.	Mr. Hunt's Mullatodu paisari coffee estate.	Mullatodu paisari jaga.
...	...	Cuppandra Chinnappa.	Didali do ...	Do do ...	21·00	202	0	0	42	0	0	244	0	0	Siddapura paisari ...	D. Timma Setti's coffee estate.	Siddapura Alekere ...	De. Sunka's coffee estate.
2247	...	Ballachanda Subbaiya.	Puttotu Makkikadu...	Kedamalluru in Beppunad	2·74	37	0	0	5	7	8	42	7	8	Sarkar paisari ...	Head Sheristadar Appachanna's jamma báne.	Malatti Kariyappa's Yedakadu Motte paisari kadu coffee and Sarkar paisari.	Sarkar paisari and Head Sheristadar Appachanna's jammada báne.
443	...	Do do ...	Padiyane paisari ...	Do do ...	0·19	1	0	0	0	6	4	1	6	4	Bastian Civil. ..	Pedru Lobu ...	Parashe Shako Yegu.	Sarkar paisari.
2189	...	Do do ...	Paisari parambu ...	Kadanur do ...	1·45	2	0	0	2	14	5	4	14	5	Maple Bavu's gadde and Sarkar paisari.	Sarkar paisari ...	Sarkar paisari	Do do
				Mercara Taluk.														
2010	...	Kongandra Ganapati.	Bettangadu paisari ...	Mekeri in Kaggodlunad	5·1	1	0	0	10	3	2	11	3	2	Horurnurokalnad Ibbani Valavadi village, Sarkar Chittardi paisari báne and Aramane kadanga and Sarkar Bettangadu paisari.	Brahman Vishnuvaiya's Bettangadu paisari.	Horurnurokalnad Ibbani Valavadi village Sarkar Chittardi paisari báne and Aramane kadanga.	Patel Tore Iyappa's sagina panjana wargada Naru Motte báne and Sanna kadanga.
4311	...	Biddanda Boppanna.	Jogipare kadu ..	Hakaturu do ...	0·89	12	0	0	1	12	6	13	12	6	Sarkar paisari kadu...	No. 4312, Balagai Sanna Channa's estate No. 4303, Balagai Chauda.	Sarkar paisari kadu Balagai Javara's estate.	No. 4319, Balagai Bola's estate.
4319	...	Do do ...	Do do ...	Do do ...	1·00	4	0	0	2	0	0	6	0	0	Sarkar paisari jungle.	No. 4318, Balagai Dodda Sanna's coffee estate and No. 4312, Balake Sanna Channa's coffee estate.	No. 4317, Balagai Punta's coffee estate.	Balagai Shekdar Saib's coffee estate.

N. B.—The purchaser will be subject to pay the assessment for the current year, *viz.*, 1880—81, as well as difference of assessment and Survey charges that may become due.

Conditions of sale.—Para.—1. The highest bidder will be the purchaser subject to confirmation of sale, provided he deposit 25 per cent of the purchase money immediately; should he fail to make such deposit the lot will be put up again.

2. The balance of the purchase money must be paid before noon of the 30th day, from the date of the sale, but if that day happens to be a Sunday or holiday the payment must be made before noon on the next office day.

3. Should the purchaser fail to pay the balance of the purchase money within the time fixed, the sale will be cancelled, the deposit will be forfeited and the land may be again put up to auction. The defaulting purchaser will be liable for any deficiency in the amount realized by the re-sale, and in the calculation of such deficiency the deposit that has been forfeited shall not be reckoned. The defaulting purchaser at the first sale shall moreover have no claim to any surplus that may be realized by the re-sale.

4. Any amount due from a defaulting purchaser may be recovered under the rules or practice in force for the recovery of arrears of land revenue.

5. All sales and re-sales shall be subject to confirmation by the Superintendent of Coorg, who may order any sale or re-sale to be cancelled. The decision of the Superintendent is open to revision by the Chief Commissioner and may be modified or reversed by him. If within three months from the date of sale, the Superintendent shall not have reversed the sale or re-sale, the same shall be held to have been confirmed.

6. In any case in which a sale or re-sale may be cancelled, the purchaser will receive back the money or deposit paid by him, but will have no claims to interest or damages.

The 30th June 1880.

Notice is hereby given for general information that the balance of the purchase money due on the undermentioned rice lands which were put up for sale in satisfaction of the Government dues on 25th November 1879, not having been paid within one month from the date of sale, they will be again put up to public auction at the 2nd Assistant Superintendent's Office at Mercara at noon on Wednesday the 25th August 1880.

No.	Nad.	Village.	Name of Purchaser.	Description of Holding.	Area in battis.	Amount of purchase money.			Boundaries. East.	West.	North.	South.
1	Horurnurokalnad.	Kadagadalu.	Koravanda Ponnappa.	Portion of Mallira barikebailu baradutevada warga.	211¼	200	0	0	Acharabáne attached to 66¼ battis of kenganda baliyatevada warga.	Dodda báne attached to 66¼ battis of kenganda-warga.	Koravanda Akamani báne.	Koravanda Ponnappa's Hukadu coffee estate.
2	Tavalgerimurnad.	Shettigeri.	S. Shankaranarnaiya	A portion of Aramanetarada Kodagatti tevada warga	220	15	0	0	Ichubáne.	Lakshamana tirtha river.	110 battis of barber Narsa's sagu land called Yedewarga.	Burial place.
3	Nanjarajpatna.	Nanjarajpatna.	Kristnama Char.	Akatevada warga.	245	17		0	Cauvery river.	Dasvala tank	Aramane kadanga.	750 battis of Dasvalada warga.

N. B.—The purchaser will be subject to pay the assessment for the current year 1879-80.

Conditions of Sale.

Para 1.—The highest bidder will be the purchaser subject to confirmation of sale provided he deposit 25 per cent of the purchase money immediately, should he fail to make such deposit the lot will be put up again.

2. The balance of the purchase money must be paid before noon of the 30th day from the date of sale, but if that day happens to be a Sunday or holiday, the payment must be made before the noon on the next office day.

3. Should the purchaser fail to pay the balance of the purchase money within the time fixed the sale will be cancelled, the deposit will be forfeited and the land may be again put up to auction. The defaulting purchaser will be liable for any deficiency in the amount realized by the resale, and in the calculation of such deficiency the deposit that has been forfeited shall not be reckoned The defaulting purchaser at the first sale shall moreover have no claim to any surplus that may be realized by the resale.

4. Any amount due from a defaulting purchaser may be recovered under the rules or practice in force for the recovery of arrears of land revenue.

5. All sales and resales shall be subject to confirmation by the Superintendent of Coorg who may order any sale or resale to be cancelled. The decision of the Superintendent is open to revision by the Chief Commissioner and may be modified or reversed by him ; if within three months from the date of sale the Superintendent of Coorg shall not have reversed the sale or resale, the same shall be held to have been confirmed.

6. In any case in which a sale or resale may be cancelled, the purchaser will receive back the money or deposit paid by him, but will have no claim to interest or damages.

H. G. THOMSON,
Superintendent.

Season Report of the Kolar District for the month of May 1880.

Rain-fall.—The average rain-fall during the month was 5 inches and 71¾ cents. Want of more rain was felt.

Lands.—Lands assessed at Rs. 403—14—5 were taken up for cultivation, while none were relinquished.

Seeds sown.—Superior sesamum, harka and sajje.

Crops.—In pretty good condition.

Health.—Sore-eyes and fever prevalent.

Casualties among Cattle.—	In April 1880.	In May 1880.
Cows and bulls	3,897	3,964
Buffaloes	1,546	1,679
Sheep and goats	1,577	2,242
Horses	14	21
Asses ..	24	49
Total....	7,058	7,955

The large number of deaths among cattle is due to murrain.

C. SOOB RAO,
For Dy. Commr.

Abstract of Meteorological Reports received from Head-Quarters of Districts in the Province of Mysore, from 1st to 15th June 1880.

DISTRICT.	Thermometer. *Averages for the half month.* 9-30 A. M. Dry bulb.	Wet bulb.	Difference.	3-30 P. M. Dry bulb.	Wet bulb.	Difference.	Thermometer. Maximum.	Minimum.	Rain. Inches.	Cents.	Wind.
Kolar	83	...	...	86	...	...	88	69	1	35	S. W.
Túmkúr ...	75	66	9	82	72	10	91	61	2	48	S. W.
Mysore*... ...	...	...	..	...	...	...	...	...	...	...	...
Hassan	65	38	27	72	42	30	80	63	1	25	S. W.
Shimoga* ...	...	...	...	...	...	...	..	...	...	...	...
Kadur ...	74	67	...	72	67	...	77	57	1	12	N. E. & S. W.
Chitaldroog ...	76	...	...	80	..	...	...	...	2	12	S. W.

*Information not received.

ADVERTISEMENT.

To be let for a year or less.

A neat and commodious Bungalow known as the "Lal-Bagh Lodge".
Rent if taken for less than 6 months Rs. 50 monthly.
If taken for over 6 months Rs. 40 monthly.

Apply to—

E. P. MALTBY,
Offg. Dy. Commr. Bangalore Dist.

Deaths registered in the Town and Cantonment of Bangalore for the Week ending 4th June 1880.

Estimated Population. { Males .. 72,236
Females .. 70,277
Total .. 142,513

Diseases.	M.	F.	Total.
Cholera	...	...	...
Small-pox	...	...	...
Fevers	12	7	19
Bowel-complaints ...	4	3	7
Suicide	...	...	...
Wounding	...	...	...
Accident	...	...	...
Snake-bite or killed by wild beasts.	...	...	...
All other causes ...	11	13	24
Total.....	27	23	50
Births during the week ...	28	34	62

Deaths registered in the Town of Mysore for the Week ending 4th June 1880.

Estimated Population. { Males .. 29,081
Females .. 28,734
Total.... 57,815

Diseases.	M.	F.	Total.
Cholera	...	...	...
Small-pox	...	..	...
Fevers	4	3	7
Bowel-complaints	6	2	8
Suicide	...	...	...
Wounding	...	...	...
Accident	..	...	...
Snake-bite or killed by wild beasts ..	...	...	...
All other causes	...	...	...
Total.....	10	5	15
Births during the week ...	9	8	17

Deaths registered in the Town and Cantonment of Bangalore for the Week ending 11th June 1880.

Estimated Population. { Males .. 72,236
Females .. 70,277
Total.... 142,513

Diseases.	M.	F.	Total.
Cholera	...	...	...
Small-pox	...	...	...
Fevers	8	14	22
Bowel-complaints	1	2	3
Suicide	...	...	...
Wounding	...	..	...
Accident	..	...	...
Snake-bite or killed by wild beasts.	...	...	...
All other causes	9	12	21
Total.....	18	28	46
Births during the week ...	28	35	63

Deaths registered in the Town of Mysore for the Week ending 11th June 1880.

Estimated Population. { Males .. 29,081
Females .. 28,734
Total.... 57,815

Diseases.	M.	F.	Total.
Cholera	...	...	...
Small-pox	...	...	...
Fevers	14	13	27
Bowel-complaints	10	8	18
Suicide	...	...	...
Wounding	...	...	...
Accident	...	1	1
Snake-bite or killed by wild beasts.	...	...	...
All other causes	...	...	...
Total.....	24	22	46
Births during the week ...	14	7	21

J. HOUSTON, M. D.,
Surgeon to the Mysore Commn.

29th June 1880.

Will be ready by the beginning of May.

Super royal 8vo. Price Rs. 10.

INDEX to the enactments relating to India. Compiled, under the orders of the Government of India, by Stephen Jacob, B. C. S., to which are prefixed Chronological Tables of the Acts and Regulations of the Indian Legislatures.

Office of Superintendent of Government Printing, 8, Hastings Street, Calcutta.

ORDNANCE DEPOT.

NOTICES.

The 14th June 1880.

Tenders sealed with wax will be received by the Deputy Assistant Commissary of Ordnance in charge of the Ordnance Depôt, Bangalore, up to noon on the 15th July 1880, for the purchase of 19,751 lbs. more or less of lead old in lots of 1,000 lbs. Tenders should specify the rate per thousand lbs.

If a tender is accepted, a deposit of 10 per cent on the aggregate value of the quantity of lead old tendered for must be paid on the acceptance of the tender, and the full value of the lead purchased must be paid for prior to its removal.

The lead can be seen at the Ordnance Depôt, Fort, between 8 A. M. and 4 P. M., on any day except Sundays and Government holidays.

N. B.—Tenders will be held by the conditions specified in the Notification in the *Fort Saint George Gazette* published in the issues for January 1870.

TO CONTRACTORS.

The 1st July 1880.

I.—Sealed tenders will be received by the Deputy Assistant Commissary of Ordnance up to 20th July 1880, for the supply of local supplies and other stores (more or less) to the Ordnance Depôt, Bangalore, from 1st April 1880 up to the 31st March 1881.

II.—Printed forms of "Lists or Schedules" of the stores (more or less) for the supply of which tenders are invited, and the form of contract-deed which, in the event of a tender being accepted, must be signed and sealed by the contractors, affixing on it a stamp of the value of one rupee, are procurable at this Office daily (Sundays and holidays excepted).

III.—Tenders will only be received on these printed forms, two of which are procurable on application at this Office for Annas three and pice eight.

IV.—These lists or schedules should be in duplicate and in English, and should specify in words as well as in figures the rate at which each description of article named in them will be delivered, and should be accompanied by a statement that the tenderers have inspected the authorized patterns of each article they tender for.

V.—Tenders should be accompanied by a deposit of rupees ten as earnest money, which deposit will be returned on execution of the contract-deed or rejection of the tenders.

VI.—Tenders not complying with these conditions will be rejected.

VII.—The lowest tender will not of necessity be accepted, and no reason will be given for rejecting any tender.

VIII.—The approval or rejection of tenders rests with the Inspector General of Ordnance, who reserves to himself the right of rejecting any tender without explanation, or any items in a tender, the rates of which are not approved.

IX.—Tenders will be opened at this Office at 12 o'clock on the 20th July 1880. Parties tendering are invited to attend.

X.—In the case of an accepted tender, the contractor must be prepared to affix an agreement stamp of eight annas to the contract-deed.

XI.—In the event of the party whose tender is accepted failing to take it up, his earnest money will be forfeited.

XII.—On failure of the contract, it shall be competent for the Inspector General of Ordnance and Magazines to confiscate the whole or any part of the security deposit to Government, at his own discretion.

XIII.—Parties tendering are particularly requested to give their address in full.

F. CLARK, *Lieut.*,
Dy. Asstt. Commy. of Ordnance.

Mysore Government Press, Bangalore.—1880.

211

THE

MYSORE GAZETTE.

Published by Authority.

BANGALORE, SATURDAY, JULY 10, 1880.

☞ Separate paging is given to this Part in order that it may be filed as a separate compilation.

PART II.

Notifications by the Judicial Commissioner, &c.

JUDICIAL DEPARTMENT.

NOTIFICATIONS.

The 1st July 1880.

The undermentioned gentleman has been enrolled as an Advocate in the Court of the Judicial Commissioner of Mysore, under the Rules of 18th February 1879 :—

Mr. Alfred Champion.

The 6th July 1880.

The undermentioned gentleman has been enrolled as an Advocate in the Court of the Judicial Commissioner of Mysore, under the Rules of 18th February 1879 :—

Mr. J. W. Handley, M. A., Barrister-at-Law.

J. D. SANDFORD,
Judicial Commissioner.

INAM DEPARTMENT.

NOTIFICATION.

No. 2. *The* 18*th June* 1880.

Statement shewing the number of title-deeds cancelled and the reason therefor during the quarter ending 31st March 1880:—

Taluk.	Name of Village.	Name of Inamdar.	Description of Inam.	Particulars. Description of land.	Extent in acres.	Extent in khandis.	Assessment.	Jodi.	Combined Quit-Rent.	Cash Payment.	Title-Deed No.	Why cancelled.	Remarks.
				Wet Nos.	A. C.	K.C. P.				Rs. As. P.			
Kadur ...	Patnagere ...	Kadur Kasba Rama Bhatta	Tope.	345, 346, 347, 348, and 349.	10 30	0 0 0	17 13 3	8 14 7	8 15 0	0 0 0	72	Relinquished.	
Chikmagalur..	Kallasettihalli.	The Managers for the time being of the Pagoda of Basavanna Devar at Kallasettihalli.	Devadaya.	Dry 16		0 2 0	3 12 7	1 14 6	22 0	...	44827		
Kavaledurga.	Ballagatta ...	Do of Ballagatta Sankara Devar at Chittemuttur		...	...	...	...	...	...	5 0 0	231 37247	Resumed as services are not rendered.	

R. A. COLE,
Supt. of Inam Settlements.

BANGALORE MUNICIPALITY.

No. 939. *The* 5*th July* 1880.

Memo of propositions to be laid before the Ordinary Meeting of the Cantonment Municipal Commission, to be held at their Office Premises, No. 12, Residency Road, on Tuesday the 20th July 1880, at 7½ A. M.

1. The usual monthly accounts for the month of June 1880.

2. Remission and exemption of house-tax.

3. List of agreements entered into by the President during the month of June 1880.

4. List of estimates sanctioned by the President during the month of June 1880.

5. Proceedings of the Chief Commissioner of Mysore, No. 1525-34—Ml. 66, dated 18th June 1880, regarding the eligibility of Municipal employés for pension.

6. Proceedings of the Chief Commissioner of Mysore, No. 1634-5—Ml. 74, dated 22nd June 1880, conveying certain remarks on the revised budget estimate of the Cantonment Municipal Commission for 1880—81.

7. Proceedings of the Chief Commissioner of Mysore, No. 1376—Ml. 228, dated 11th June 1880, issuing instructions as to the method and preparatory measures necessary for taking a General Census in Bangalore.

8. Circular No. 1633—Ml. 73, dated 21st June 1880, from the Secretary to the Chief Commissioner in the Revenue Department, forwarding copy of orders from the Government of India relating to the exemption of certain classes from Municipal taxes when on duty in Cantonments where the Municipal Act is in force.

J. H. ORR,
President, Cantt. Munl. Commn.

NUNDYDROOG DIVISION.

NOTIFICATION.

The 5th July 1880.

Sessions for the Bangalore District will be held at Bangalore on Monday the 19th day of July 1880 and following days.

The case mentioned below is posted for trial :—

Magisterial No.	Sessions No.	Name of Prisoner.	Name of the Committing Magistrate.	Sections charged under—	Date of Committal.
465 of 1880.	26 of 1880.	Yella	Mr. E. Pereira, 2nd Magistrate, Town and Cantonment, Bangalore.	379 and 75, I. P. C.	22nd June 1880.

The Magistrate above named is hereby directed to cause all parties connected with the above noted case to be in attendance at Bangalore before the Sessions Court on Monday the 19th instant at 11 A. M.

All cases committed prior to that date will be taken up for trial in addition to the above.

T. R. A. THUMBOO CHETTY,
Sessions Judge.

BANGALORE DISTRICT.

NOTIFICATION.

The 3rd July 1880.

It is hereby notified for public information that 3 English pattern ploughs, made at the Experimental Farm, Bangalore, will be sold by public auction, one by one, before the District Treasury Officer at the Deputy Commissioner's Office, on the 23rd July 1880. The sale will commence at 12 noon on that date and the ploughs will be knocked down to the highest bidder.

2. The purchaser will be required to at once deposit 25 per cent of the purchase money, and to pay the balance into the District Treasury within 15 days from the sale ; failing to do so, the money deposited will be forfeited to Government.

3. If the above conditions, or any of them, are not complied with, the ploughs will be sold again at the expense and risk of the first purchaser.

4. Persons wishing to bid for the ploughs may inspect them at the District Office any day after 11 A. M.

E. P. MALTBY,
Offg. Dy. Commr.

KADUR DISTRICT.

IN THE COURT OF THE SUBORDINATE JUDGE OF THE KADUR DISTRICT.

O. S. No. 199 *of* 1879.

Execution Case No. 223 *of* 1879.

Baligar Kallamma .. .. Plaintiff.
By Pleader B. Gundappa.

Versus.

1. Syed Takhi Ali Huseni, *alias* Husen Pira.
2. Syed Bandan Raj Huseni *alias* Gesund Raj, } sons of Rai Vellore Murshat Pira Sahib.. Defendants.

In execution of a decree of the Subordinate Judge's Court, Kadur District, in the above cause dated the 2nd day of December 1879, in virtue whereof a sum of Rs. 1,346—8—0 was adjudged to be payable by the said defendants unto the said plaintiff, and of a warrant dated the 9th day of June 1880 for giving effect to the said decree by sale of property attached thereunder, notice is hereby given that on the 14th day of July 1880 at 11 noon, the Nazir of this Court or other person appointed, will, at Chikmagalur before this Court, sell by auction to the highest bidder and without reserve, the right, title and interest of the said defendants in the several articles of immovable property hereunder specified and every power of disposing of the same or any of them or of the profits arising therefrom which the said defendants may now consistently with the law exercise for their own benefit.

1	2	3	4	5	6	7	8	9
Lot No.	Situation of Property.	Description of lot including all particulars described in Amin's report.	Survey No., Municipal No., or other fiscal designation.	Government revenue including Local Cess, any other known fiscal charges resting on the lot and shewing any arrears due.	Present occupant, if known.	Mortgage or lien subject to which attachment has been continued and sale is to be made under Sections 282 and 295 of the Code of Civil Procedure.	Lists of rights, charges and claims to which the lot is supposed to be liable after enquiry under Section 287 of the Code of Civil Procedure and Rules made thereunder by the High Court.	List of claims to raise attachment rejected wholly or in part under Section 278 of the Code of Civil Procedure.
1	"Mottekallu Jangali" in the village of Jamanahalli, Lingadahalli Magani, attached to the Sub-Registration District, Tarikere Taluk.	"Mottekallu Jangali" *alias* "Abbikhan Bund Tota" covered by a patta in the name of Mr. Ross Porter, who sold it to Rai Vellore Abdul Rahiman Saib from whom defendants purchased it for Rs. 2,500, on the 9th July 1878. The land measures 220 acres, 17 guntas and 91 yards and is bounded on the east by a stone marked A on a mound called "Kodgallu Dinne" eastward of the path leading to "Mottekallu" and a stone marked B on a stone mound called "Kalludinne" higher up the "Gangolegiri;" West by a stone E on the top of a sloping hill called "Mallekallu Yenu Gudda" and stone F at "Sanna Mitti" or high ground northward of Malekal Yenu"; North by stone G on a high ground above "Abbihalla" straightly eastward of "Haddinkatte" and a stone H on the hill near the slope "Ilijaru" by the path going to "Mottekallu" forming last boundary of Kimanagundi"; and— South by stone C on a mound above "Batavinakan" jungle lying down westward of "Nagari Buruz" and a stone D near "Kariyannan Tittina Kallubana" on the hill westward of "Nagari Buruz": (*a*) A portion of a space of 200,000 coffee trees is alleged to have been leased to the son of Suryanarnappa on $\frac{1}{8}$ (or Panchar) shikmi tenure. The coffee garden mortgaged to Shikarpur Subba Rao by defendants for Rs. 3,000 and odd.	Patta No. 259, dated 8th April 1869, granted by the Chief Commissioner.	...	No mention is made in Amin's report.	Shikarpur Subba Rao to whom the defendants mortgaged the property for Rs. 7,730 under a deed, dated the 9th July 1878, transferred his right therein to Abdul Rahiman Saib by a deed of sale, dated the 24th October 1879. The latter claims Rs. 4,000 as due to him on the liability of the property.	Debt of Rs. 4,000 claimed by Abdul Rahiman Saib as mentioned in column 7.	Suryanarnappa, the alleged Shikmidar (*vide* column 3) has not appeared though served with due notice.

T. RAGHAVENDRA RAO,
Offg. Subordinate Judge.

Deaths registered in the Town and Cantonment of Bangalore for the Week ending 28th May 1880.

Estimated Population. { Males .. 72,236 / Females .. 70,277 } Total... 142,513

Diseases.	M.	F.	Total.
Cholera ...	...	...	...
Small-pox	...	...	...
Fevers ...	9	5	14
Bowel-complaints	5	3	8
Suicide ...	...	...	...
Wounding	...	..	...
Accident	2	...	2
Snake-bite or killed by wild beasts.	...	...	...
All other causes	9	7	16
Total.....	25	15	40
Births during the week ...	39	28	67

Deaths registered in the Town of Mysore for the Week ending 28th May 1880.

Estimated Population. { Males .. 29,081 / Females .. 28,734 } Total... 57,815

Diseases.	M.	F.	Total.
Cholera ...	...	...	...
Small-pox ..	...	...	...
Fevers ...	8	7	15
Bowel-complaints ...	5	2	7
Suicide ...	...	...	...
Wounding ...	...	...	...
Accident ...	1	...	1
Snake-bite or killed by wild beasts.	...	...	...
All other causes ...	...	...	...
Total.....	14	9	23
Births during the week ...	15	12	27

J. HOUSTON, M. D.,
Surgeon to the Mysore Commn.

29*th June* 1880.

Visitors to the Mysore Government Museum, Bangalore, during the month of June 1880, *were* 26,607 *in number, averaging, exclusive of Sundays,* 1,023 *daily.*

Signatures made in—									Total of Signatures.		Unable to sign but tally kept.	Total of Visitors.	Unable to sign No. of—		Total of Visitors.
English.															
Europeans.	Natives.	Tamil.	Telugu.	Kanarese.	Hindustani.	Mahratta.	Malayalam.	Guzarati.	Males.	Females.			Men and Boys.	Women and Girls.	
314	523	435	176	1,403	199	47	2	5	2,966	138	23,503	26,607	12,054	11,449	26,607

J. HOUSTON, M. D.,
Supt., Mysore Govt. Museum.

ORDNANCE DEPOT.

NOTICE.

TO CONTRACTORS.

The 1*st July* 1880.

I.—Sealed tenders will be received by the Deputy Assistant Commissary of Ordnance up to 20th July 1880, for the supply of local supplies and other stores (more or less) to the Ordnance Depôt, Bangalore, from 1st April 1880 up to the 31st March 1881.

II.—Printed forms of "Lists or Schedules" of the stores (more or less) for the supply of which tenders are invited, and the form of contract-deed which, in the event of a tender being accepted, must be signed and sealed by the contractors, affixing on it a stamp of the value of one rupee, are procurable at this Office daily (Sundays and holidays excepted).

III.—Tenders will only be received on these printed forms, two of which are procurable on application at this Office for Annas three and pice eight.

IV.—These lists or schedules should be in duplicate and in English, and should specify in words as well as in figures the rate at which each description of article named in them will be delivered, and should be accompanied by a statement that the tenderers have inspected the authorized patterns of each article they tender for.

V.—Tenders should be accompanied by a deposit of rupees ten as earnest money, which deposit will be returned on execution of the contract-deed or rejection of the tenders.

VI.—Tenders not complying with these conditions will be rejected.

VII.—The lowest tender will not of necessity be accepted, and no reason will be given for rejecting any tender.

VIII.—The approval or rejection of tenders rests with the Inspector General of Ordnance, who reserves to himself the right of rejecting any tender without explanation, or any items in a tender, the rates of which are not approved.

IX.—Tenders will be opened at this Office at 12 o'clock on the 20th July 1880. Parties tendering are invited to attend.

X.—In the case of an accepted tender, the contractor must be prepared to affix an agreement stamp of eight annas to the contract-deed.

XI.—In the event of the party whose tender is accepted failing to take it up, his earnest money will be forfeited.

XII.—On failure of the contract, it shall be competent for the Inspector General of Ordnance and Magazines to confiscate the whole or any part of the security deposit to Government, at his own discretion.

XIII.—Parties tendering are particularly requested to give their address in full.

F. CLARK, *Lieut.*,
Dy. Asstt. Commy. of Ordnance.

ADVERTISEMENT.

To be let for a year or less.

A neat and commodious Bungalow known as the "Lal-Bagh Lodge".
Rent if taken for less than 6 months Rs. 50 monthly.
If taken for over 6 months Rs. 40 monthly.

Apply to—

E. P. MALTBY,
Offg. Dy. Commr., Bangalore Dist.

Will be ready by the beginning of May.
Super royal 8vo. Price Rs. 10.

INDEX to the enactments relating to India. Compiled, under the orders of the Government of India, by Stephen Jacob, B. C. S., to which are prefixed Chronological Tables of the Acts and Regulations of the Indian Legislatures.

Office of Superintendent of Government Printing, 8, Hastings Street, Calcutta.

Mysore Government Press, Bangalore.—1880.

THE

MYSORE GAZETTE.

Published by Authority.

BANGALORE, SATURDAY, JULY 17, 1880.

☞ Separate paging is given to this Part in order that it may be filed as a separate compilation.

PART II.

Notifications by the Judicial Commissioner, &c.

INAM DEPARTMENT.

NOTIFICATION.

No. 3. *The* 14*th July* 1880.

Inamdars are hereby informed that 496 *ad-interim* extracts for minor inams situated in the marginally noted taluks were forwarded to the Deputy Commissioners of the Bangalore, Kolar, Kadur, Hassan and Mysore Districts on the 8th July 1880, for distribution.

Dodballapur.	Channaraypatna.
Anekal.	Periyapatna.
Mulbagul.	Heggaddevankote.
Múdgere.	Gundlupet.
Hassan.	Nanjangúd.
Attikuppa.	Talakád.
Belur.	

They are accordingly to appear to receive the same on receipt of individual notices from the Amildars of the aforesaid taluks, who are hereby instructed to issue such notices without delay.

R. A. COLE,
Supt. of Inam Settlements.

FINANCIAL DEPARTMENT.

No. 1772. *The* 6*th July* 1880.

The following orders of the Government of India are published for the guidance of District Treasury Officers in Mysore :—

H. HUDSON,
Dy. Acctt. General in Mysore.

Government of India, Department of Finance and Commerce, Accounts and Finance, No. 1153, Simla, the 15th June 1880.

Read again—

Resolution in the Department of Finance No. 211, dated the 26th April 1880, by which Treasury Officers were permitted to verify the Treasurer's daily Balance Sheet on the morning of the next day.

Read—

Letter from the Comptroller General No. 303, dated the 7th May 1880, submitting remarks with reference to the above-mentioned order.

RESOLUTION.—The Governor General in Council observes that it is an important rule of the Account Department that the Treasurer's and Accountant's Balance Sheets should be worked out independently of each other and should be brought together and verified by the Treasury Officer himself. For the purposes of this check, and also because it is expedient that he should know the balance of the day before he leaves office, the Treasury Officer should not postpone the duty of signing the Treasurer's statement to the next morning. The Treasurer's statement can be ready within a very short time after the close of the cash transactions. The comparison of this statement with the Accountant's Balance, the preparation of which takes more time, may be made on the following morning.

ORDERED, that this Resolution be communicated to the several Local Governments and Administrations, to the Comptroller General, to the several Accountants General, and to the several Deputy Accountants General in independent charge.

REGISTRATION DEPARTMENT.

NOTIFICATION.

To—The Registering Officers in Mysore, dated 8th July 1880.

Doubts having arisen as to the competency of Registering Officers in Mysore to attest powers of attorney which are required to be produced for registration purposes in British India, the Inspector General of Registration, under orders of the Chief Commissioner of Mysore, has the honor to point out that such powers of attorney should only be attested agreeably to Clause C. of Section 33 of Registration Act III of 1877, that is by a Judge or Sub-Judge, a Magistrate or an Amildar of a Taluk vested with Subordinate Magisterial powers. Registrars and Sub-Registrars in Mysore are therefore prohibited hereafter from attesting *as such*, powers of attorney of the kind referred to.

H. HUDSON,
Inspector General of Registration,
Mysore & Coorg

BANGALORE MUNICIPALITY.

The 15th July 1880.

Memo of propositions to be laid before the next meeting of the Town Municipal Commission, to be held at their Office Premises, Bangalore Taluk Cutcherry, on Saturday, the 24th July 1880, at 7½ A. M.

1. The usual monthly accounts and mortuary return for the month of June 1880.

2. Proceedings of the Chief Commissioner of Mysore, No. 1376—Mis. 228, dated 11th June 1880, issuing instructions as to the method and preparatory measures necessary for taking a general census of the Province in February 1881, and order thereon.

3. Proceedings of the Chief Commissioner of Mysore, No. 1634-5—Ml. 74, dated 22nd June 1880, reviewing the revised Budget of the Cantonment Municipality for the year 1880—81.

4. Re-consideration of the resolution passed at an Ordinary Meeting of the Town Municipal Commission held on the 21st July 1877, regarding the revision of the existing Bye-laws.

J. H. ORR,
President, Town Ml. Commn.

BANGALORE DISTRICT.

NOTIFICATION.

The 3rd July 1880.

It is hereby notified for public information that 3 English pattern ploughs, made at the Experimental Farm, Bangalore, will be sold by public auction, one by one, before the District Treasury Officer at the Deputy Commissioner's Office, on the 23rd July 1880. The sale will commence at 12 noon on that date and the ploughs will be knocked down to the highest bidder.

2. The purchaser will be required to at once deposit 25 per cent of the purchase money, and to pay the balance into the District Treasury within 15 days from the sale; failing to do so, the money deposited will be forfeited to Government.

3. If the above conditions, or any of them, are not complied with, the ploughs will be sold again at the expense and risk of the first purchaser.

4. Persons wishing to bid for the ploughs may inspect them at the District Office any day after 11 A. M.

E. P. MALTBY,
Offg. Dy. Commr.

HASSAN DISTRICT.

NOTIFICATION.

The 7th July 1880.

It is hereby notified that the undermentioned jungle lands in the Manjarabad Taluk, Hassan District, applied for, for coffee cultivation, will be sold by public auction by the Amildar of the said taluk on the 1st day of November 1880, and knocked down to the highest bidder on confirmation of the sale by the Deputy Commissioner, Hassan District. Purchasers will be required to deposit 25 per cent as soon as the sale is closed, and the remaining portion of the purchase money immediately on receipt of intimation of the confirmation of the sale by the Deputy Commissioner, failing which the lands will be again put up to auction at the risk of the defaulting purchaser.

Hobli.	Village.	Name of the Jungle.	Boundaries.	Extent. Acres.	Roods.	Poles.	Yards.
Ballu.	Hoskere.	Hoskere Dod Udve ...	*Piece No.* 1. *North.*—Danamala and Guruve Gauda's gardens... *East.*—Building site belonging to Anne Gauda and others. *South.*—Arasinamakki Gadde (field) ... *West.*—Halekere ... ... *Piece No.* 2. *North*—Linge Gauda's gardens ... ... *East.*—Tank ... ... *South.*—Ditch ... ... *West.*— Do	27	1	10	17½
Ballu.	Halekere.	Halekere Udve ...	*North to South.*—From Kare Agalu Nandi Mara (tree) to the hedge of Guruve Gauda's garden. *East to West.*—From Bakare Agalu to Kesaramakki Gadde (field)	6	1	31	12¼
				33	3	1	29¾

P. N. KRISHNA MURTI,
Offg. Dy. Commissioner.

Catalogue of Books registered in accordance with the provisions

	Title in full.	Language in which the book is written.	Name of the Author, Translator, or Editor of the book or any part thereof.	Subject.	Place of printing and place of publication.	Name of firm of the printer and the name or firm of the publisher.
	1	2	3	4	5	6
Books.	ಚಾಣಿಕ್ಯ ತಂತ್ರ ಚಮತ್ಕಾರ.		*Translator.*			
	Chánikya Tantra Chamatkára ...	Sanskrit and Kanarese.	Pustaka Alasingrachar.	State craft ...	Jagan Mohan Press, Mysore.	Pustaka Tirumalachar, Printer and Publisher.
	ಕರ್ಣಾಟಕ ಭಾಷಾಭೂಷಣ.		*Author.*			
	Karnátaka Bháshá Bhúshana ...	Do	Nága Varma.	Kanarese Grammar.	Do	Do
	Bála Bodhini	Sanskrit.	Periswami Tirumalachar.	Sanskrit Grammar.	Do	M. S. Tirumalachar, Printer and Publisher.
Pamphlets.	ಮೋಹ ವಿವೇಕರ ಕಾಳಗ.					
	Móha Vivékara Kálaga	Kanarese.	Tirumal Das ...	Discourse on Vedánta principles.	Vichara Darpana Press, Bangalore.	M. Kamanna, Printer, Puttappa *alias* Tirumalaya, Publisher.
	ಅಕ್ಷರ ಮಾಲಿಕ ಸ್ತೋತ್ರ.					
	Akshara Málika Stótra	Sanskrit.	Brahmánanda Yógi ...	Prayers of the Brahma Samaj, alphabetically arranged.	Do	M. Kamanna, Printer, Brahmasamaj, Publisher.
	ಧರ್ಮನೀತಿ.					
	Dharma Niti	Kanarese.	Not known ...	Moral maxims from the Mahá Bhárata.	Do	M. Kamanna, Printer, Vittal Rao, Mysore, Publisher.
	ಬಾಗಲುತಡಿಯುವಪದ.					
	Bágalu Tadiyuva Pada	Do	Do	Songs relating to Krishna's marriage from the Bhágavata.	Do	Do
	ವಿರೂಪಾಕ್ಷನೀತಿ.					
	Virupáksha Niti	Do	Do	Moral verses. ...	Do	Do
	ಅಕ್ಷರಮಾಲಿಕೆ.					
	Akshara Málike	Telugu.	Do	Praises of Siva, arranged alphabetically.	Do	Do
	ಬೇತಾಳಪಂಚವಿಂಶತಿ ಕಥೆಗಳು.					
	Bétála Pancha Vimsati Kathegalu ...	Kanarese.	Do	Stories related by Betala to Vikramaditya.	Do	M. Kamanna, Printer and Publisher.
	ದ್ರೌಪದಿ ಚರಿತೆ, ಕೀಚಕವಧೆ.					
	Draupadi Charitre, Kichaka Vádhe ...	Do	Sibi Ranga Das ...	Story in yakshagana from the Mahá Bhárata.	Do	M. Kamanna, Printer, Chandrasekharaiya, Publisher.
	ದಾಸರಪದಗಳು.					
	Dásara Padagalu	Do	Not known ...	Songs in honor of Vishnu.	Do	M. Kamanna, Printer.
	ಗೋವುಕಥೆ ಮತ್ತು ವಿಭೀಷಣಬುದ್ಧಿ.					
	Govu Kathe and Vibhishana Buddhi ...	Do	...	Stories and morals.	Do	Do
	ಹರಿಭಕ್ತಿಸಾರ.					
	Haribhaktisára	Do	Kanaka Das ...	Verses in praise of Vishnu.	Do	Do
	ಸಾರಂಗಧರನಕಥೆ.					
	Sárangadharana Kathe	Do	Sambaiya ...	Story from the Mahá Bhárata.	Do	Do Printer, and Publisher.

OFFICE OF THE CURATOR, GOVERNMENT LIBRARY,
BANGALORE, *5th July* 1880.

of Act XXV of 1867 during the Quarter ending 30th June 1880.

Date of issue from the Press or of the publication.	Number of sheets, leaves, or pages.	Size.	1st, 2nd, or other number of edition.	No. of copies of which edition consists.	Whether printed or lithographed.	Price.	Name and residence of proprietor of copy right or any portion thereof.	Whether copyright is secured or not.	Remarks.
7	8	9	10	11	12	13	14	15	
						Rs. As. P			
20th March 1880.	115	Demy 16mo.	First Edition.	500	Printed.	0 4 0	Pustaka Tirumalachar, Devaraj Mohalla, Mysore.	Secured, 2nd June 1880.	
25th March 1880.	88	Do 12mo.	Do	500	Do	0 4 0	Do	Do	
10th April 1880.	120	First Edition.	Do	500	Do	0 12 0	...	...	
Do	31	Demy 8vo.	Do	500	Do	0 4 0	...	...	
12th Do	26	Do 16mo.	Do	1,000	Do	0 2 0	...	...	
13th Do	8	Do	Second Do	1,000	Do	0 0 6	...	...	
Do	8	Do	Do	1,000	Do	0 0 6	...	...	
14th Do	10	Do	Do	1,000	Do	0 0 9	...	...	
Do	6	Do	First Do	1,000	Do	0 0 6	...	...	
16th Do	44	Do 8vo.	Fourth Do	1,000	Do	0 3 0	...	...	
18th Do	82	Do 12mo.	First Do	1,000	Do	0 4 0	...	...	
20th May 1880.	104	Do. 8vo.	Third Do	1,000	Do	0 6 0	...	..	
24th Do	12	Do	Fourth Do	1,000	Do	0 1 0	...	...	
25th Do	10	Do 8vo.	Do	1,000	Do	0 1 0	...	...	
26th Do	38	Do	Second Do	1,000	Do	0 4 0	...	...	

(*Revised.*) L. RICE,
Director of Public Instruction,
Mysore & Coorg.

J. P. GARRETT,
Curator, Mysore Govt. Library.

ANCHE DEPARTMENT.

NOTICE.

No. 439—288. *The* 16*th July* 1880.

The following Postal Notice issued by the Director General of the Post Office of India, is published for general information.

B. MURRY GUNGIAH,
Anche Bakshi.

Notice to the Public.

WITH effect from the 1st August 1880, the rates of commission charged on the realization of the value of parcels and registered book packets sent under the "value-payable" system will be reduced to half what they now are and thereby assimilated to the rates of commission charged on the issue of money orders. The new rates will be as follows :—

On sums not exceeding	Rs. 10	Rs. 0 2	On sums not exceeding	Rs. 100	Rs. 1 0
,, ,,	,, 25	,, 0 4	,, ,,	,, 125	,, 1 4
,, ,,	,, 50	,, 0 8	,, ,,	,, 150	,, 1 8
,, ,,	,, 75	,, 0 12			

and 4 annas for every additional Rs. 25 or fraction thereof.

The value of the contents of a value-payable article will be limited to Rs. 600.

Value-payable articles may be addressed only to Post Offices which are Money Order Offices ; and they may be posted only in Post Offices which are Money Order Offices. The former restriction limiting the posting of value-payable articles in Disbursing Post Offices is superseded.

The amounts realized from the addressees of value-payable articles less the commission chargeable thereon will be paid to the senders by means of money orders.

When a value-payable article is presented at a Post Office, it must be accompanied by a memorandum prepared by the sender in the prescribed form, printed copies of which may be obtained from the Post Office on application.

SEASON REPORTS FOR THE MONTH OF JUNE 1880.

Túmkúr District.

Rain.—Rain fell throughout the District as follows :—

	I.	C.		I.	C.
Túmkúr	6	5	Sira ..	0	88
Koratagere	3	42	Kunigal ..	2	50
Maddagiri	0	92	Kadaba ..	3	40
Chiknayakanhalli ..	2	9	Honnavalli ..	3	30
			Total.. ..	22	56

Weather.—Cloudy.

Crops.—Vaisak crops are being harvested in Sira, Kunigal and Kadaba Taluks, while ragi, dál, harka, castor-oil seed and black gram are being sown throughout the District.

Public Health.—Good ; the total number of deaths from all causes amounted to 662 in May against 750 in April.

Cattle.—Mortality among cattle was 1,132 against 2,170 shewn for May last.

Lands—Yielding an assessment of Rs. 4,668—3—0 were taken up for cultivation, while those of Rs. 16 were relinquished.

Prices.—Rice, ragi, dál, ballar, horse-gram and wheat were sold at 13 seers, 13 chittaks, 34 S. 17 C., 32 S. 36 C., and 8 S. 4 C., respectively per rupee.

K. SESHADRI IYER,
Dy. Commissioner.

Mysore District.

Rain.—Seasonable rain fell throughout the District, the total quantity gauged was 21 inches 43 cents.

Crops.—Prospect of crops good, but more sunshine desirable. Tuvar, ragi, paddy, sugar-cane, ballar, wheat, &c., were sown during the month, while green-gram and black-gram were harvested.

Health.—The health of the public has been on the whole good.

Cattle.—Murrain prevailed in almost all the taluks and 1,452 head of cattle died from this cause; while 951 from other diseases.

Prices.—Fluctuating.

C. J. PEARSE,
Dy. Commissioner.

Shimoga District.

Rain-fall.—The rain-fall in the several taluks of the District during the month under report was as follows :—

	Inches.	Cents.		I.	C.
Shimoga	5	79	Sorab	10	83½
Channagiri	6	24	Ságar	16	68¼
Hónnali	2	4½	Nagar	47	85
Shikarpur	8	22	Kavaledurga ..	26	38

The average reading of the thermometer at Shimoga were 79·1 and 81·16 at 9-30 A. M. and 3-30 P. M. respectively.

Lands.—Lands assessed at Rs. 2,909—9—0 were taken up for cultivation and lands assessed at Rs. 3,381—9—4 were given up.

Health.—Indifferent.

Cattle.—Suffer from murrain in all the taluks.

Prices.—Easy.

V. N. NARSIMMAIENGAR,
Dy. Commissioner.

Chitaldroog District.

Weather.—The weather was unpleasant. Very high winds blew during the month. Rain fell more or less in all parts of the District, and the fall of rain gauged at the taluk head-quarters was as follows :—

	I.	C.		I.	C.
Chitaldroog	6	½	Hiriyur	3	60
Davangere	2	59	Budihal	3	35
Kankuppa	2	66¼	Hosdurga	3	35
Dodéri	3	40	Pavagada	3	40

The average reading of the thermometer at the District head-quarters was 74·63 at 9-30 A. M. and 77·90 at 3-30 P. M. The general direction of the wind was south-west.

Crops.—The crops are reported to be in good condition in all parts of the District excepting in some parts of Kankuppa, where the young crops suffered in the early part of the month from want of rain. The seeds sown during the month were javari, black and green gram, gingelly, castor-oil, ragi, paddy, togari, sáme, sajje, harka, navane and baragu. No crops were harvested during the month under report.

Lands paying an assessment of Rs. 3,843—2—0 were newly taken up for cultivation during the month, while razinamas to the extent of Rs. 31—8—0 were tendered.

Health.—The health of the population was good. Fever and cough were the diseases prevalent in some parts.

Cattle.—No epidemic disease prevailed among cattle.

Prices.—The markets were fairly supplied with grain, and the average prices were as follows :—

Per rupee.	Per rupee.	Per rupee.
Rice 13 to 14 seers.	Ragi 34 to 36 seers.	Javari 30 seers.

ABDUL KHADER, K. B.,
Dy. Commr.

Abstract of Meteorological Reports received from Head-Quarters of Districts in the Province of Mysore, from 16th to 30th June 1880.

DISTRICT.	Thermometer. Averages for the half month. 9-30 A. M. Dry bulb.	Wet bulb.	Difference.	3-30 P. M. Dry bulb.	Wet bulb.	Difference	Thermometer. Maximum.	Minimum.	Rain. Inches.	Cents.	Wind.
Kolar	78	...	...	83	...	...	84	69	...	59	S. W.
Túmkúr ...	76	64	12	86	73	13	90	61	3	57	S. W.
Mysore*... ...	...	...	..	...	...	...	...	...	...	...	...
Hassan	65	38	27	69	40	29	76	63	4	39	S. W.
Shimoga ...	77	...	...	78	...	...	...	...	4	25	S. W.
Kadur ...	72	67	...	71	66	...	76	58	4	30	S. W.
Chitaldroog ...	73	...	...	76	..	...	...	...	3	22	S. W.

*Information not received.

POSTAL NOTICE.

The 15th July 1880.

It is hereby notified for the information of the public that Mails for the Australian colonies will be despatched *viâ* Bombay only in future, the other routes *viâ* Madras and Tuticorin being discontinued.

The following are the dates of despatch of the Australian Mails for the remainder of the year 1880.

Memorandum of Dates.

Month and year.		From Bombay.		From Bangalore.	
July	1880	16th	30th	13th	27th
August	,,	13th	27th	10th	24th
September	,,	10th	24th	7th	21st
October	,,	8th	22nd	5th	19th
November	,,	5th	19th	2nd	16th—30th.
December	,,	3rd, 17th,	31st	14th	28th

H. M. D'ROZARIO,
Acting Postmaster.

ORDNANCE DEPOT.

NOTICE TO CONTRACTORS.

The 1st July 1880.

I.—Sealed tenders will be received by the Deputy Assistant Commissary of Ordnance up to 20th July 1880, for the supply of local supplies and other stores (more or less) to the Ordnance Depôt, Bangalore, from 1st April 1880 up to the 31st March 1881.

II.—Printed forms of "Lists or Schedules" of the stores (more or less) for the supply of which tenders are invited, and the form of contract-deed which, in the event of a tender being accepted, must be signed and sealed by the contractors, affixing on it a stamp of the value of one rupee, are procurable at this Office daily (Sundays and holidays excepted).

III.—Tenders will only be received on these printed forms, two of which are procurable on application at this Office for Annas three and pice eight.

IV.—These lists or schedules should be in duplicate and in English, and should specify in words as well as in figures the rate at which each description of article named in them will be delivered, and should be accompanied by a statement that the tenderers have inspected the authorized patterns of each article they tender for.

V.—Tenders should be accompanied by a deposit of rupees ten as earnest money, which deposit will be returned on execution of the contract-deed or rejection of the tenders.

VI.—Tenders not complying with these conditions will be rejected.

VII.—The lowest tender will not of necessity be accepted, and no reason will be given for rejecting any tender.

VIII.—The approval or rejection of tenders rests with the Inspector General of Ordnance, who reserves to himself the right of rejecting any tender without explanation, or any items in a tender, the rates of which are not approved.

IX.—Tenders will be opened at this Office at 12 o'clock on the 20th July 1880. Parties tendering are invited to attend.

X.—In the case of an accepted tender, the contractor must be prepared to affix an agreement stamp of eight annas to the contract-deed.

XI.—In the event of the party whose tender is accepted failing to take it up, his earnest money will be forfeited.

XII.—On failure of the contract, it shall be competent for the Inspector General of Ordnance and Magazines to confiscate the whole or any part of the security deposit to Government, at his own discretion.

XIII.—Parties tendering are particularly requested to give their address in full.

F. CLARK, *Lieut.*,
Dy. Asstt. Commy. of Ordnance.

Will be ready by the beginning of May.

Super royal 8vo. Price Rs. 10.

INDEX to the enactments relating to India. Compiled, under the orders of the Government of India, by Stephen Jacob, B. C. S., to which are prefixed Chronological Tables of the Acts and Regulations of the Indian Legislatures.

Office of Superintendent of Government Printing, 8, Hastings Street, Calcutta.

GOVERNMENT CINCHONA FEBRIFUGE.

This preparation is an efficient substitute for Quinine and can be purchased by Government officers, for public and charitable purposes, and by any one taking *twenty pounds* at a time, from the Superintendent, Botanical Garden, Calcutta, *for cash only*, at the following rates, per four ounce tin *Rs.* 4, *ans.* 8; per eight ounce tin *Rs.* 8, *ans.* 8; per pound tin *Rs.* 16, *ans.* 8. The general public can be supplied by the Superintendent, Botanical Garden, *for cash only*, at the undernoted rates, per four ounce tin *Rs.* 5, *ans.* 8; per eight ounce tin *Rs.* 10, *ans.* 8; per pound tin *Rs.* 20. This medicine is also sold by the principal European and Native druggists in Calcutta. Postage eight annas per 4 and 8 *oz.* tins and twelve annas per pound tin, in addition to the foregoing rates.

Mysore Government Press, Bangalore.—1880.

THE

MYSORE GAZETTE.

Published by Authority.

BANGALORE, SATURDAY, JULY 24, 1880.

☞ Separate paging is given to this Part in order that it may be filed as a separate compilation.

PART II.

Notifications by the Judicial Commissioner, &c.

JUDICIAL DEPARTMENT.

CIVIL PROCEDURE CODE, ACT X OF 1877, IN KANARESE.

The 14th July 1880.

Erratum.—Insert the words ಆದಿವಸ ವಿನಹಾಯಿಸಿ after the words ಸೊತ್ತನ್ನು ವಿಕ್ರಯಿಸಿದ ತಾರೀಖು ಮೊದಲು in Section 307.

J. D. SANDFORD,
Judicial Commissioner.

INAM DEPARTMENT.

NOTIFICATION.

No. 3. *The 14th July* 1880.

Inamdars are hereby informed that 496 *ad-interim* extracts for minor inams situated in the marginally noted taluks were forwarded to the Deputy Commissioners of the Bangalore, Kolar, Kadur, Hassan and Mysore Districts on the 8th July 1880, for distribution.

Dodballapur.	Channaraypatna.
Anekal.	Periyapatna.
Mulbagul.	Heggaddevankote.
Múdgere.	Gundlupet.
Hassan.	Nanjangúd.
Attikuppá.	Talkad.
Belur.	

They are accordingly to appear to receive the same on receipt of individual notices from the Amildars of the aforesaid taluks, who are hereby instructed to issue such notices without delay.

R. A. COLE,
Supt. of Inam Settlements.

BANGALORE MUNICIPALITY.

The 15th July 1880.

Copy of Proceedings of the Town Municipal Commission at a meeting held on Wednesday the 30th June 1880, at 7½ A. M.

President.

Dr. J. H. Orr, C. B., *Present.*

Ex-Officio Members.

Absent.—The Deputy Commissioner, Bangalore Dist.
The Executive Engineer, Nundydroog Divn.
The Commissary of Ordnance.
The Surgeon to the Mysore Commission.
The Amildar of Bangalore.

Municipal Commissioners.

1st Division, Balé Pettah.

Present.—Mr. B. Murry Gungiah.
Absent.— Mr. A. S. Raghavachar.

2nd Division, Manavarte Pettah.

Present.—Mr. A. Srinivasachar.
Absent.—Mr. Khazi Abed Jaffar Shaib.

3rd Division, Alsur Pettah.

Present.—Mr. S. V. Annaiyappa Chetti.
Absent.—Mr. P. Changalraya Modaliar.

4th Division, Nagarta Pettah.

Present.—Mr. C. Doddi Venkatramana Chetti.
Absent.— Mr. B. Narayan Chetti.

5th Division, Kalasi Palyam.

Present.—Mr. C. Muttusami Naidu.
Mr. M. Ramasami Chetti.

I. The usual monthly accounts for May 1880 are laid before the Board, read and duly passed.

Ordered.—That the following cash account be submitted to the Deputy Accountant General in Mysore.

Cash Account Current of the Municipal Commission for the Town of Bangalore for the month of May 1880.

Receipts.	Amount.			Expenditure.	Amount.		
Cash Balance brought forward from last month's account	2,989	12	5	I. Collection. 1. For octroi tax ...	222	6	2
I. Octroi. 2. Animals for slaughter ..	10	8	0	I. Collection. 2. Mohatarfa tax on houses, buildings and lands, and for tax on professions and trades	164	9	3
I. Octroi. 4. Building materials ...	16	9	6	I. Collection. 7. Rents assigned to Municipality ...	21		6
I. Octroi. 6. Tobacco, betel-leaf and betel-nuts ...	1,406	2	5	II. Head Office charges ...	406	5	10
I. Octroi. 7. Tax on dry and green cocoanuts ...	185	2	5	III. Public Works. 1. Supervision ...	146	7	8
II. Mohatarfa tax on houses, buildings and lands	888	9	1	III. Public Works. 2. *a.* Original works ...	260	14	0
III. Mohatarfa tax on professions and trades	1,046	15	11	III. Public Works. 3. Repairs ...	568	15	4
VII. Rents.—2. Nazul Shops ...	187	8	0	IV. Police	1,413	8	1
IX. Extraordinary.—3. Refunds and Recoveries ...	1	3	8	VI. Charitable grants—2. Vaccination ...	21	10	10
5. Other items ...	17	4	0	VII. Conservancy	801	1	6
X. Fines	2	13	5	IX. Lighting	182	0	6
XI Pounds	21	8	8	X. Gardens	5	0	0
XII. Miscellaneous	91	15	8	XII. Miscellaneous 3. Cattle Pound charges	16	6	10
XIII. Fees from liquor licenses ...	286	13	4	XII. Miscellaneous 4. Statistics and mortuary registration ...	39	5	0
				XII. Miscellaneous 5. Other miscellaneous items ...	134	15	2
				Total Rupees.....	4,405	3	8
				To Cash Balance carried to next month's accounts... ..	2,747	10	10
Grand Total Rs.....	7,152	14	6	Grand Total Rs.....	7,152	14	6

Mortuary Register, Bangalore.

Statement of Births and Deaths within the Town Municipal limits during the month of May 1880.

Causes of Death.	Europeans.		East Indians.		Musalmáns.		Hindus.		Native Christians.		Buddhists.		Other Classes.		Total.		Total in—		Difference.	
	M.	F.	M.	F.	M.	F.	M.	F.	M.	F.	M.	F.	M.	F.	M.	F.	May 1880.	April 1880.	Increase.	Decrease.
Cholera ...	...	...	...	...	...	...	...	...	...	...	...	...	...	...	...	...	...	...	...	...
Small-pox ...	...	...	...	...	...	...	...	...	...	...	...	...	...	...	...	...	...	1	...	1
Fevers ...	...	...	...	...	8	9	19	11	...	...	...	...	...	...	27	20	47	61	...	14
Bowel-complaints ...	...	...	...	...	1	1	1	1	...	...	...	...	...	...	2	2	4	4	...	...
Injuries. Suicide ...	...	...	...	...	...	...	...	...	...	...	...	...	...	...	...	...	...	...	...	...
Injuries. Wounding ...	...	...	...	...	...	...	...	...	...	...	...	...	...	...	...	...	...	...	...	...
Injuries. Accident ...	...	...	...	...	...	...	2	1	...	...	...	...	...	...	2	1	3	3	...	...
Injuries. Snake-bite or killed by wild beasts. ...	...	...	...	...	...	...	1	...	...	...	...	...	...	...	1	...	1	...	1	...
Other Causes—																				
Consumption ...	...	...	...	...	1	...	4	2	...	...	...	...	...	...	5	2	7	1	6	...
Convulsion ...	...	...	...	...	...	...	1	1	...	...	...	...	...	...	1	1	2	6	...	4
Dropsy ...	...	...	...	...	...	...	1	...	...	...	...	...	...	...	1	...	1	2	...	1
Lock-jaw ...	...	...	...	...	...	1	...	5	...	...	...	...	...	...	...	6	6	4	2	...
Asthma ...	...	...	...	...	...	...	...	...	...	...	...	...	...	...	...	...	...	1	...	1
Rheumatism ...	...	...	...	...	1	...	...	...	...	...	...	...	...	...	1	...	1	3	...	2
Old-age ...	...	...	...	...	...	...	4	2	...	...	...	...	...	...	4	2	6	7	...	1
Croup ...	...	...	...	...	...	...	1	1	...	...	...	...	...	...	1	1	2	3	...	1
Diarrhœa ...	...	...	...	...	...	...	...	...	...	...	...	...	...	...	...	...	...	1	...	1
Leprosy ...	...	...	...	...	...	...	...	...	...	...	...	...	...	...	...	...	...	2	...	2
Ulcer ...	...	...	...	...	...	...	...	1	...	...	...	...	...	...	...	1	1	...	1	...
Total Other Causes ...	...	...	...	...	2	1	11	12	...	...	...	...	...	...	13	13	26	30	9	13
Total Deaths ...	...	...	...	...	11	11	34	25	...	...	...	...	...	...	45	36	81	99	10	28
Number of Births during the month.	...	...	...	...	8	8	34	40	...	...	...	...	...	...	42	48	90	98	...	8

Abstract of Mortuary Report and Percentage of Births and Deaths on the estimated Population, 58,573.

Classes.	Births. April 1880.	Births. May 1880.	Difference. Increase.	Difference. Decrease.	Percentage of Births. April 1880.	Percentage of Births. May 1880.	Deaths. April 1880.	Deaths. May 1880.	Difference. Increase.	Difference. Decrease.	Percentage of Deaths. April 1880.	Percentage of Deaths. May 1880.
Europeans ...	...	...	...	...	...	...	...	...	...	...	...	...
East Indians ...	...	...	...	...	...	...	...	...	...	...	...	...
Musalmáns ...	15	16	1	...	·23	·24	26	22	...	4	·401	·33
Hindus ...	83	74	...	9	·16	·14	73	59	...	14	·14	·11
Native Christians	...	...	...	...	...	...	...	...	...	...	...	...
Buddhists ...	...	...	...	...	...	...	...	...	...	...	...	...
Other Classes ...	...	...	...	...	...	...	...	...	...	...	...	...
Total.....	98	90	1	9	·17	·15	99	81	...	18	·17	·14

REMARKS.

There were 81 deaths during the month; 47 from fever, 4 from bowel-complaints, 4 from injuries and 26 from other causes as detailed in the previous page.

The number of deaths in May 1880, as compared with those of April 1880, are as follows:—

Of Musalmáns 22 against 26, Hindus 59 against 73, being 18 less than the previous month and 30 below the total number of deaths registered during the corresponding month of last year.

Age.

Classes.	Number died during the month.	Born dead.	Under 1 year.	2 to 5 years.	6 to 12 do	12 to 20 inclusive.	21 to 30 do	31 to 40 do	41 to 50 do	51 to 60 do	Above 60.	Total.
Europeans ...	...	...	...	...	...	...	...	...	...	...	...	...
East Indians ...	...	...	...	...	...	...	...	...	...	...	...	...
Musalmáns ...	22	...	3	6	1	2	...	1	4	2	3	22
Hindus ...	59	...	4	3	1	10	10	5	6	5	15	59
Native Christians ...	...	...	...	...	...	...	...	...	...	...	...	...
Buddhists ...	...	...	...	...	...	...	...	...	...	...	...	...
Other Classes ...	...	...	...	...	...	...	...	...	...	...	...	...
Total.....	81	...	7	9	2	12	10	6	10	7	18	81

Resolution.—Approved.

II. Annual accounts shewing the receipts and disbursements for the official year 1879—80.

Resolution.—The statements of receipts and disbursements as marginally noted are approved of, and it is resolved that copies be now furnished to the Deputy Accountant General in Mysore.

1	Statement	No. I.
1	Do	No. II.
1	Do	No. III.
1	Do	B.
1	Form	C.
1	Appendix	A.
1	Do	B.

Deferred Proposition.

III. Application from Mr. T. Venkatsubbu Modaliar requesting to cause a passage to be opened on the east side of the Vegetable Market.

Resolution.—The Commissioners resolve that the passage applied for may be opened experimentally for a period of six months, and the necessity as to its retention or otherwise be considered at a future meeting.

J. H. ORR,
President, Town Muni. Commn.

NUNDYDROOG DIVISION.

NOTIFICATION.

The 17th July 1880.

Sessions for the Túmkúr District will be held at Túmkúr on Monday the 2nd day of August 1880 and following days.

The cases mentioned below are posted for trial :—

Magistrate's No.	Session No.	Names of Prisoners.	Names of the Committing Magistrates.	Sections charged under—	Date of Committal.
34-2 of 1880.	5	Gangaiya	Venkatrangaiengar, Amildar and 3rd Class Magistrate, Chiknayakanhalli Taluk.	467 and 468, I. P. C.	7th June 1880.
33-1 of 1880.	6	Baire Gauda	Do do	Do	Do
4 of 1880.	7	Narsimhaiya	Mr. Panchanatha Rao, 2nd Class Magistrate.	457, 380 and 75, I. P. C.	12th July 1880.
21 of 1880.	8	Virappa	Mr. Chitambram Iyer, Subordinate Judge and 1st Class Magistrate.	211, I. P. C.	13th do

The Magistrates above named are hereby directed to cause all parties connected with the above noted cases to be in attendance at Túmkúr before the Sessions Court on Monday the 2nd day of August 1880 at 11 A. M.

All cases committed prior to that date will be taken up for trial in addition to the above.

T. R. A. THUMBOO CHETTY,
Sessions Judge.

MYSORE DISTRICT.

NOTIFICATION.

Sitaramaiya, Acting Amildar and 3rd Class Magistrate of the Heggaddevankote Taluk, is hereby invested under Clause *b*, Section 23, C. P. Code, with the following powers :—

1. Power to hold inquests.

2. Power to entertain complaints of offences in cases in which he has jurisdiction to try.

Setu Rao, Acting Amildar and 3rd Class Magistrate of Yedatore, is hereby invested under Section 23, C. P. Code, with the following power :—

Power to hold inquests.

M. Subba Rao, Amildar and 3rd Class Magistrate of the Periyapatna Taluk, is hereby invested under Clause *b*, Section 23 of the C. P. Code, with the following power :—

Power to issue orders prohibiting repetition of nuisance, Section 519.

C. PEARSE,
Dy. Commissioner.

COORG.

NOTIFICATION.

The 20th July 1880.

Notice is hereby given for general information that the sales of the undermentioned coffee estates on 18th November 1879 in satisfaction of the Government dues having been cancelled by the Chief Commissioner in letter from Secretary, dated 29th June 1880, No. 365—12, they will be again put up to public auction at the 2nd Assistant Superintendent's Office, at Mercara, at noon on Thursday 16th September 1880, and re-sold to the highest bidders above the upset price of one year's assessment.

No. of Estate.	Name of Defaulter.	Name of Estate.	Village, Nad and Taluk.	Area.	Annual Assessment.			Outstanding dues.			Boundaries. North.	South.	East.	West.
1304	Channapatna Buddan Mulk.	Burugadagundi kadu.	Kaggodlu in Kaggodlu Nad, Mercara Taluk.	40·08	80	2	7	583	0	6	Government paisari burugada marada betta and Bettalappa Devara báne and Bettalappa Devara Jahagir vargada kadu báne.	Government paisari grass land and Aramane kadang.	Government paisari burugada marada betta and Bettalappa Devara báne.	Bettalappa Devara Jahagir vargada kadu báne.
1503	Do ...	Burugadagundi ...	Do do do ...	7·68	15	5	9	57	8	2	Brahman Shankara Bhatta's burugadagundi kadu coffee estate.	Paisari urugunda parambu.	Brahman Shankra Bhatta's burugada gundi kadu coffee estate and paisari urugunda parambu.	Brahman Govindaiya's Sagina Irumanda vargada motte báne.
2650	Tallara Latchma ...	Ukadu	Katageri do do ...	19·09	38	2	11	242	12	3	Karim Saib's estate and Dukoji's estate.	Mallaiya's jammada báne and ryots jamma land.	Sarkar paisari and Puppana Appanna's estate.	Dukoji's estate and Mallaiya's jamma báne.
2782	S. Sarasvatamma ...	Pachalekadu ...	Haisodlu in Anjigerinad of the Kiggatnad Taluk ...	20·25	40	8	0	300	12	0	Sarkar paisari báne.	Sarkar paisari báne.	Sarkar paisari báne	Sarkar paisari báne and Ajjukutti Devaiya's pachale kadu.

N. B.—The purchaser will be subject to pay the assessment for 1879—80, also assessment for the current year *viz.*, 1880—81 and other charges which may be due.

Conditions of sale.—Para.—1. The highest bidder will be the purchaser subject to confirmation of sale, provided he deposit 25 per cent of the purchase money immediately; should he fail to make such deposit the lot will be put up again.

2. The balance of the purchase money must be paid before noon of the 30th day, from the date of sale, but if that day happens to be a Sunday or holiday the payment must be made before noon on the next office day.

3. Should the purchaser fail to pay the balance of the purchase money within the time fixed, the sale will be cancelled, the deposit will be forfeited and the land may be again put up to auction. The defaulting purchaser will be liable for any deficiency in the amount realized by the re-sale, and in the calculation of such deficiency the deposit that has been forfeited shall not be reckoned. The defaulting purchaser at the first sale shall moreover have no claim to any surplus that may be realized by the re-sale.

4. Any amount due from a defaulting purchaser may be recovered under the rules or practice in force for the recovery of arrears of land revenue.

5. All sales and re-sales shall be subject to confirmation by the Superintendent of Coorg, who may order any sale or re-sale to be cancelled. The decision of the Superintendent is open to revision by the Chief Commissioner and may be modified or reversed by him. If within three months from date of sale, the Superintendent shall not have reversed the sale, the same shall be held to have been confirmed by him.

6. In any case in which a sale or re-sale may be cancelled, the purchaser will receive back the money or deposit paid by him, but will have no claims to interest or damages.

7. No bid made by or on behalf of a defaulter will be accepted and any purchase made by or on behalf of a defaulter will be null and void.

H. G. THOMSON,
Superintendent.

HASSAN DISTRICT.

POLICE NOTICE.

The 12th July 1880.

Hue and Cry—Proclaimed Offender.

Name, Venkatkrishna Rao.—*Father's Name*, Ramaiya.—*Taluk*, Recently Narsipur, Hassan District; formerly Nellore, Madras Presidency.—*Village*, Narsipur, formerly Nellore.—*Age* 30 years.—*Height*, 5′.—*Color*, Brown color.—*General appearance*, Not known.—*Caste*, Brahman.—*Where likely to go*, Hydrabad.—*Where has connections*, Not known.—*Province*, Mysore.—*Offence*, Cheating by public servant under Section 418, Indian Penal Code.

N. CHELVIENGAR,
1st Class Magistrate.

SEASON REPORTS FOR THE MONTH OF JUNE 1880.

Bangalore District.

Rain-fall.—The rain-fall as gauged at head-quarters was 2 inches 25 cents.

Crops.—Ragi, avare, togari and sáme were sown during the month, and Vaisak paddy harvested.

Health.—The public health has been good. Fever and ague prevailed in some of the taluks.

Mortality.—One-thousand and thirty-four deaths were registered in the month of May against 926 in the previous month.

Cattle.—Murrain continued to prevail chiefly in the Taluks of Hoskote, Devanhalli and Magadi; the number of deaths from this source was 714. The number of deaths from all causes amounted to 4,051 against 4,494 in May.

Lands.—Lands assessed at Rs. 4,232—1—8 were taken up for cultivation.

E. P. MALTBY,
Offg. Dy. Commr.

Kadur District.

Rain-fall.—The following statement shews the quantity of rain-fall gauged at Taluk head-quarters and several coffee estates during the month:—

Taluks.	I.	C.	*Estates.*	I.	C.
Tarikere ..	4	24	Santaveri ..	14	5
Lakvalli.. ..	13	1	Murguddekan ..	36	57
Koppa	29	56¼	Kare-hadlu ..	19	91
Chikmagalur ..	5	42	Basgode ..	17	0
Banavar.. ..	6	31	Qualdhitlu ..	35	45
Múdgere ..	15	87	Mailimane ..	12	69
Kadur.. ..	4	½	Nemar ..	50	5
			Alikan	58	20
			Balur	26	18

Seeds sown.—Sugar-cane, black-gram, green-gram and javari in the Tarikere Taluk. Coriander in the Tarikere and Chikmagalur Taluks. Paddy in the Lakvalli Taluk. Paddy and ragi in the Múdgere Taluk. Gingelly, black-gram, javari, navane, avare, ragi, oil-seeds, and chillies in the Banavar Taluk.

Coffee Prospects.—Good.

Health.—Generally good, but fever continued to prevail in parts of the Koppa, Banavar and Tarikere Taluks.

Live-stock.—The conditions of live-stock is reported to have been generally good, but hoof and mouth disease prevailed in all the taluks except Múdgere. The loss among cattle was 829 in this against 424 in the previous month and 919 in June 1879.

Crops harvested.—Sugar-cane in the Banavar Taluk.

Land.—Land assessed at Rs. 6,201—10—6 was taken up for cultivation, against land assessed at Rs. 12—8—0 relinquished.

Condition of crops.—Good.

S. VENKAT VARDAIENGAR,
Offg. Dy. Commr.

Coorg.

Wet land.—Preparations are being made for transplanting the Kartika crop. Reaping of the Vaisak crop has been completed.

Ragi.—Ragi is thriving, and is now about one foot in height.

Cardamoms.—The prospects of the cardamom crop are good.

Coffee.—Prospects of coffee are not good. The blossom promised well, but the berries have not formed properly. Scarcity of Mysore labor is also felt.

Mortality.—The number of deaths amongst the population of the Province was 278 against 404 in the same month of last year, and is classified as follows :—

Diarrhœa	6	*Taluks.*	
Small-pox	5	Mercara	43
Fever	263	Padinalknad	44
Accidents	2	Yedenalknad	49
Other diseases	2	Kiggatnad	51
		Nanjarajpatna	46
		Yelsavirshime	26
		Towns.	
		Mahadeopet	4
		Virarajendrapet	15
Total	278	Total	278

Of the above, there were 106 males, 70 females and 102 children of the following sects :—Christians 4 ; Coorgs 58 ; Hindus 158 ; Muhammadans 8 ; other classes 50; total 278.

Cattle.—The mortality amongst the cattle was 472 against 889 in the same month of last year, and is classified as follows :—

Bulls 118 ; cows 106 ; calves 88 ; he-buffaloes 70 ; she-buffaloes 56 ; calves 34 ; total 472.

Market-rates.—Prices have risen.

Rain-fall.—Mercara—

	Inches.	Cents.
In June 1880	31	1
Total Rain-fall	39	16
Somavarpet—		
In June 1880	23	74
Total Rain-fall	28	78

H. G. THOMSON,
Superintendent.

Deaths registered in the Town and Cantonment of Bangalore for the Week ending 25th June 1880.

Estimated Population. { Males .. 72,236
Females .. 70,277

Total.... 142,513

Diseases.	M.	F.	Total.
Cholera	...	...	...
Small-pox	...	...	...
Fevers	9	9	18
Bowel-complaints ...	3	3	6
Suicide	...	...	...
Wounding	...	...	...
Accident	...	1	1
Snake-bite or killed by wild beasts.	...	...	...
All other causes ...	13	12	25
Total.....	25	25	50
Births during the week ...	29	27	56

Deaths registered in the Town of Mysore for the Week ending 25th June 1880.

Estimated Population. { Males .. 29,081
Females .. 28,734

Total.... 57,815

Diseases.	M.	F.	Total
Cholera	...	...	...
Small-pox	..	..	...
Fevers	7	2	9
Bowel-complaints	4	5	9
Suicide	...	...	...
Wounding	...	...	...
Accident	..	1	1
Snake-bite or killed by wild beasts ...	...	...	...
All other causes	...	...	...
Total.....	11	8	19
Births during the week ...	12	6	18

Deaths registered in the Town and Cantonment of Bangalore for the Week ending 2nd July 1880.

Estimated Population. { Males .. 72,236
Females .. 70,277

Total.... 142,513

Diseases.	M.	F.	Total.
Cholera	...	...	...
Small-pox	...	...	...
Fevers	8	6	14
Bowel-complaints	3	4	7
Suicide	1	...	1
Wounding	...	..	...
Accident	...	...	...
Snake-bite or killed by wild beasts.	...	...	...
All other causes	14	11	25
Total.....	26	21	47
Births during the week ...	43	27	70

Deaths registered in the Town of Mysore for the Week ending 2nd July 1880.

Estimated Population. { Males .. 29,081
Females .. 28,734

Total.... 57,815

Diseases.	M.	F.	Total.
Cholera	...	...	...
Small-pox	...	...	...
Fevers	9	6	15
Bowel-complaints	3	6	9
Suicide	...	...	...
Wounding	...	...	...
Accident	...	...	...
Snake-bite or killed by wild beasts.	...	...	...
All other causes	...	...	...
Total.....	12	12	24
Births during the week ...	11	5	16

J. HOUSTON, M. D.,
Surgeon to the Mysore Commn.

17*th July* 1880.

Will be ready by the beginning of May.

Super royal 8*vo. Price Rs.* 10.

INDEX to the enactments relating to India. Compiled, under the orders of the Government of India, by Stephen Jacob, B. C. S., to which are prefixed Chronological Tables of the Acts and Regulations of the Indian Legislatures.

Office of Superintendent of Government Printing, 8, Hastings Street, Calcutta.

Abstract of Meteorological Reports received from Head-Quarters of Districts in the Province of Mysore, from 1st to 15th July 1880.

DISTRICT.	Thermometer. Averages for the half month.						Thermometer.		Rain.		Wind.
	9-30 A. M.			3-30 P. M.							
	Dry bulb.	Wet bulb.	Difference.	Dry bulb.	Wet bulb.	Difference.	Maximum.	Minimum.	Inches.	Cents.	
Kolar	74	...	...	77	...	...	79	68	1	46	S. W.
Túmkúr ...	74	63	11	85	73	12	87	60	2	68	S. W.
Mysore*... ...	...	...	...	...	...	...	...	...	...	...	...
Hassan	63	34	29	68	38	30	74	62	1	85	S. W. E.
Shimoga ...	77	...	...	77	...	...	.	...	3	68	...
Kadur ...	71	66	...	69	65	...	73	55	4	16	S. W.
Chitaldroog ...	72	...	...	75	...	...	...	...	...	95	S. W.

*Information not received.

SALE OF SALT AT THE MADRAS SALT DEPOT.

NOTICE.

Some misunderstanding appears to exist among the salt traders in the interior of the terms on which salt is sold by Government at the Madras Salt Depôt. It is therefore notified that it is not the case that salt is there sold for transport inland by rail only to the merchants who purchase upon credit, but that it is available for sale for that purpose to all applicants at Rs. 2—11—0 per maund in any quantity from 1 maund upwards. Payment may be made in cash or currency notes every day (except sanctioned holidays) between the hours of 8 and 1 P. M. Salt paid for will, as far as possible, be delivered the same day. Purchasers of a full railway waggon-load (200 maunds) at one time are allowed favorable rates of freight by the Railway Company.

H. W. BLISS,
Commissioner of Salt Revenue.

GOVERNMENT CINCHONA FEBRIFUGE.

This preparation is an efficient substitute for Quinine and can be purchased by Government officers, for public and charitable purposes, and by any one taking *twenty pounds* at a time, from the Superintendent, Botanical Garden, Calcutta, *for cash only*, at the following rates, per four ounce tin *Rs.* 4, *ans.* 8; per eight ounce tin *Rs.* 8, *ans.* 8; per pound tin *Rs.* 16, *ans.* 8. The general public can be supplied by the Superintendent, Botanical Garden, *for cash only*, at the undernoted rates, per four ounce tin *Rs.* 5, *ans.* 8; per eight ounce tin *Rs.* 10, *ans.* 8; per pound tin *Rs.* 20. This medicine is also sold by the principal European and Native druggists in Calcutta. Postage eight annas per 4 and 8 *oz.* tins and twelve annas per pound tin, in addition to the foregoing rates.

Mysore Government Press, Bangalore.—1880.

THE

MYSORE GAZETTE.

Published by Authority.

BANGALORE, SATURDAY, JULY 31, 1880.

☞ Separate paging is given to this Part in order that it may be filed as a separate compilation.

PART II.

Notifications by the Judicial Commissioner, &c.

JUDICIAL DEPARTMENT.

NOTIFICATION.

The 23rd July 1880.

The undermentioned person has been enrolled as 2nd Grade Pleader in the Courts of Mysore, under the Rules of 18th February 1879 :—

183. Shimoga Raghavendra Rao .. Proposing to practise in the Courts of the Nagar Division.

J. D. SANDFORD,
Judicial Commissioner.

REVENUE SURVEY AND SETTLEMENT DEPT.

NOTIFICATION.

No. 673. *Poona, the 24th July* 1880.

Major G. Makenzie, Assistant Superintendent, Mysore Revenue Survey, returned to duty on the forenoon of 16th May 1880, from the 1 year and 187 days' furlough to Europe, granted him in Bombay Government Notification No. 793, dated 8th October 1878, published in the *Mysore Gazette* of the 26th idem, of which he availed himself on the forenoon of the 1st November 1878.

W. C. ANDERSON,
Survey & Sett. Commr. of Mysore.

REGISTRATION DEPARTMENT.

COMPUTATION OF REGISTRATION FEE WHERE A DOCUMENT COMPRISES SEVERAL PROPERTIES.

To—The Registering Officers in Mysore and Coorg, Circular Memo No. 4 of 1880—81, dated 29th July 1880.

With reference to para 2 of this Office Circular No. 9, dated 16th December 1874, the Inspector General of Registration has the honor to point out to Registrars and Sub-Registrars that where a document provides for the sale of several properties or articles, the price or value of each being specified, the registration fee should be computed and levied on the total and not on the separate amounts. The same rule will apply to a mortgage, a lease or other instrument representing a transaction of the same character though comprising more than one property.

H. HUDSON,
Inspector General of Registration,
Mysore & Coorg.

MEDICAL DEPARTMENT.

No. 492. NOTIFICATIONS.

The 23rd July 1880.

The following removals and postings are ordered :—

Rank.	Name.	From—	To—
3rd Class Hospital Assistants.	C. Krishnasami Modaliar, No. 21...	D. d. Bowring Civil Hospital.	D. d. Civil Hospital, Mysore.
	V. Velayuda Modaliar „ 12...	Do do ...	D. d. Civil Dispensary, Chikmagalur.
	M. R. Srinivasalu Naidu „ 37...	Late promotion ...	Under the orders of Surgeon in charge Pettah Civil Dispensary.
	Abdul Wahab „ 38...	Do ...	D. d. Civil Hospital, Mysore.
	G. B. Chinnasami „ 39...	Do ...	D. d. do Shimoga.
	A. Rajagopal Nayakar „ 40...	Do ...	Under the orders of Surgeon in charge Pettah Civil Dispensary.
	J. Samuel „ 41...	Do ...	D. d. Civil Hospital, Shimoga.
	A. P. Muttusami Pille „ 42...	Do ...	D. d. Bowring Civil Hospital.
	M. Ephraim „ 43...	Do ...	D. d. Civil Dispensary, Hassan.
	V. S. Balasundram Modr. „ 44...	Do ...	D. d. Bowring Civil Hospital.
	M. Perumalu Naidu „ 45...	Do ...	D. d. do do

No. 507. *The 28th July* 1880.

The following removals and postings are ordered, as a temporary measure :—

Rank.	Name.	From—	To—
1st Hospital Assistants.	S. Arokyam Pille, No. 493 ...	Central Jail, Bangalore ...	Lying-in-Hospital, Bangalore.
	S. R. Jiyarasamigaru „ 505 ...	D. d. Pettah Dispensary ...	Central Jail, Bangalore.

J. HOUSTON, M. D., *Surgeon-Major,*
Surgeon to the Mysore Commission.

INAM DEPARTMENT.

NOTIFICATION.

No. 3. *The* 14*th July* 1880.

Inamdars are hereby informed that 496 *ad-interim* extracts for minor inams situated in the marginally noted taluks were forwarded to the Deputy Commissioners of the Bangalore, Kolar, Kadur, Hassan and Mysore Districts on the 8th July 1880, for distribution.

Dodballapur.	Channarayapatna.
Anekal.	Periyapatna.
Mulbagal.	Heggaddevankote.
Múdgere.	Gundlupet.
Hassan.	Nanjangúd.
Attikuppa.	Talkad.
Belur.	

They are accordingly to appear to receive the same on receipt of individual notices from the Amildars of the aforesaid taluks, who are hereby instructed to issue such notices without delay.

R. A. COLE,
Supt. of Inam Settlements.

BANGALORE MUNICIPALITY.

No. 6. *The* 26*th July* 1880.

Proceedings of an Ordinary Meeting of the Cantonment Municipal Commission held at their Office Premises No. 12, Residency Road, on Tuesday the 20th July 1880, at 7½ A. M.

President.

Dr. J. H. Orr, C. B.—*Present.*

Ex-Officio Members.

Present.—The Asstt. Quarter-Master Genl., M. Dn.
The Dy. Surgeon Genl., H. M.'s British Forces.

Absent.—The Executive Engr., Nundydroog Dn.
The Dist. Superintendent of Police.
The District Engineer.
The Town and Cantt. 2nd Magistrate.

Municipal Commissioners of Divisions.

No. 1, *Alsur Division.*

Present.—V. Sadasiva Modaliar, Esq.
R. P. Campbell, Esq.

No. 2, *Shule Division.*

Preent.—Standish Lee, Esq.
Absent.—V. Vasudeva Modaliar, Esq.

No. 3, *Richmond Town and Fort Division.*

Present.—Abdul Husen Saib, Esq.
Captain P. Curley.

No. 4, *General Bazar Division.*

Present.—Abdul Khudus Khadri Khaji Saib, Esq.
A. R. Sabhapati Modaliar, Esq.
Mahomed Saliha, Esq.

No. 5, *Blackpalli Division.*

Present.—B. Ramalingam, Esq.
T. T. Leonard, Esq.

No. 6, *High Ground Division.*

Present.—Major-General C. G. Ottley.
G. G. Brown, Esq.

239

Statement of Accounts.

1. The Progress Report, Account Current, Statement of Cash Balance and Assessor's Accounts for June 1880, together with the Mortuary Report for the same period, are submitted and after examination are adopted :—

Receipts.	Amount.		
I. Octroi.... Class 1. Articles of food or drink for men or animals or duty on dry and green cocoanuts ...	537	3	3
„ 2. Animals for slaughter	...	...	...
„ 3. Fuel, lighting and washing	...	...	...
„ 4. Building materials	41	1	0
„ 5. Drugs, spices and gums	...	...	...
„ 6. Tobacco and betel leaves	3,313	6	11
„ 7. Cloth	...	...	...
„ 8. Metals	...	...	..
II. Tax on houses, buildings or lands	3,958	1	2
III. Tax on professions and trades or collections of liquor license fees...	481	10	8
IV. Tax on carriages, horses, &c.	...	...	...
V. Tolls on carts, carriages, &c.	...	...	...
VI. Special taxes under Section II, Act VI of 1868—Conservancy ...	...	...	...
VII. Rents ... 1. Nazul lands	364	10	0
2. Do shops	453	13	0
3. Serais	...	...	...
4. Confiscated lands	...	...	...
5. Compound or site tax	...	...	...
VIII. Gardens	...	...	...
IX. Extraordinary. 1. Sale of houses and lands	...	...	..
2. Loans	...	...	...
3. Refunds and recoveries	...	...	...
4. Interest on securities and loans	380	12	6
5. Other Items	...	..	...
X. Fines	33	8	0
XI. Pounds	86	6	0
XII. Miscellaneous	673	9	8
XIII. Transfers and Contributions—Received from the Executive Engineer, Bangalore Division, on account of grant-in-aid for repairing suburban roads	838	15	9
Moiety of Rev. on kandayam lands within Ml. limits for 1878—79...	3,181	11	7
Total Rupees.....	14,344	13	6
To Cash Balance brought forward from last month's accounts.....	5,803	6	1
Total Rupees.....	20,148	3	7

Expenditure.	Amount.		
I. Collections... 1. For Octroi tax	415	1	2
2. „ Tax on houses, buildings and lands ...	516	4	9
3. „ Tax on professions and trades ...	10	0	0
4. „ Tax on carriages, horses, &c. ...	..	...	..
5. „ Tolls on carts and other vehicles ...	...	...	...
6. Special taxes	...	...	...
7. Rents assigned to Municipality ...	134	7	0
II. Head Office Charges	811	11	10
III. Public Works. 1. Supervision	513	10	8
2. *a.* Original Works	1,160	8	5
b. Purchase of land	... 8	10	0
c. Compensation for houses, &c. ...	...	...	...
3. Repairs	2,391	0	5
IV. Police	1,200	15	9
V. Education	...	...	...
VI. Charitable Grants. 1. Dispensary and Medical Charges ...	...	...	...
2. Vaccination	20	0	0
3. Asylums	...	...	...
VII. Conservancy	1,643	11	0
VIII. Road watering	78	13	8
IX. Lighting	649	0	2
X. Gardens ... 1. Public Gardens	...	...	..
2. Nursery	7	0	0
3. Farms	...	...	...
XI. Extraordinary... 1. Museums and Institutes ...	...	...	...
2. Purchase of Government Notes ...	...	...	...
3. Fairs and Exhibitions.	...	..	...
XII. Miscellaneous ... 1. Repayment of loans	...	...	...
2. Refund of excess collections ...	...	...	...
3. Cattle Pound charges	80	14	6
4. Statistics and mortuary registration ...	85	7	9
5. Other miscellaneous items ...	345	6	6
XIII. Reserve	...	...	...
Total Rupees... ..	10,072	11	7
To Cash Balance carried to next month's accounts.....	10,075	8	0
Total Rupees.....	20,148	3	7

Resolution.—Passed.

Mortuary Register, Bangalore.

2. Statement of Births and Deaths within Cantonment Municipal limits during the month of June 1880.

Causes of Deaths.	Europeans.		East Indians.		Musalmans.		Hindus.		Native Christians.		Other Classes.		Buddhists.		Total.		Total in—		Difference.	
	M.	F.	M.	F.	M.	F.	M.	F.	M.	F.	M.	F.	M.	F.	M.	F.	June 1880.	May 1880.	Increase.	Decrease.
Cholera ...	...	...	...	...	...	...	...	...	...	...	...	...	...	...	...	...	...	...	...	...
Small-pox ...	...	...	...	...	...	...	...	...	...	...	...	...	...	...	...	...	...	...	...	...
Fevers... ...	...	...	...	...	1	3	15	11	1	4	...	...	...	...	17	18	35	24	11	...
Bowel-complaints ...	...	...	...	...	4	1	5	7	1	3	...	...	...	...	10	11	21	17	4	...
Suicide ...	...	...	...	...	...	...	...	...	...	...	...	...	...	...	...	...	...	...	...	...
Wounding ...	...	...	...	...	...	...	...	...	...	...	...	...	...	...	...	...	...	...	...	...
Accidents ...	...	...	...	...	...	...	1	...	...	1	...	...	...	...	1	1	2	3	...	1
Snake-bite or killed by wild beasts.	...	...	...	...	...	...	...	...	...	...	...	...	...	...	...	...	...	...	...	...
Other Causes—																				
Cough ...	...	...	...	...	...	...	1	1	1	...	...	...	...	...	2	1	3	...	...	...
Anasarca ...	...	...	1	...	...	1	...	1	...	...	...	...	...	...	1	2	3	...	...	...
Ascites ...	...	...	...	...	...	...	1	1	...	...	...	...	...	...	1	1	2	...	...	...
Convulsion ...	...	...	1	...	...	4	5	10	...	...	...	...	...	...	6	14	20	...	...	...
Fits by child births	...	...	...	...	...	1	...	1	...	...	...	...	...	...	...	2	2	...	...	...
Consumption ...	...	...	...	...	...	...	6	1	...	1	...	...	...	...	6	2	8	...	...	...
Ulcer ...	...	...	...	...	...	...	1	...	...	...	...	...	...	...	1	...	1	...	...	...
Paralysis ...	...	...	...	...	2	...	...	...	...	1	...	...	...	...	2	1	3	...	...	...
Inflamation of lungs	...	...	...	...	...	...	...	2	2	...	...	...	...	...	2	2	4	...	...	...
Still-born ...	...	...	...	...	...	...	2	6	...	...	...	...	...	...	2	6	8	...	...	...
Epilepsy ...	...	...	...	...	...	...	...	1	...	...	...	...	...	...	...	1	1	...	...	...
Liver disease ...	...	...	1	...	...	...	...	...	...	...	...	...	...	...	...	1	1	...	...	...
Lock-jaw ...	...	...	...	...	...	...	3	1	...	...	...	...	...	...	3	1	4	...	...	...
Old age ...	...	...	...	...	...	1	2	1	...	1	...	...	...	...	2	3	5	...	...	...
Debility ...	1	...	...	...	1	...	2	2	...	...	...	...	...	...	4	2	6	...	...	...
Pneumonia ...	...	...	...	...	...	...	1	1	...	1	...	...	...	...	1	2	3	...	...	...
Rheumatism ...	...	...	...	...	...	...	...	1	1	...	...	...	...	...	1	1	2	...	...	...
Inanition ...	...	...	...	...	...	...	...	...	...	1	...	...	...	...	...	1	1	...	...	...
Fit ...	...	...	...	...	...	...	...	1	...	...	...	...	...	...	...	1	1	...	...	...
Furunculus boil	...	...	...	...	...	...	...	...	1	...	...	...	...	...	1	...	1	...	...	...
Dentitis ...	...	...	...	...	...	...	...	1	...	...	...	...	...	...	...	1	1	...	...	...
Apoplexy ..	...	...	...	...	...	...	...	1	...	...	...	...	...	...	...	1	1	...	...	...
Bronchitis ...	...	...	...	...	...	...	1	...	...	...	...	...	...	...	1	...	1	...	...	...
Partus ...	...	...	...	...	...	...	...	1	...	...	...	...	...	...	...	1	1	...	...	...
Phthisis ...	...	...	...	...	...	...	...	1	...	...	...	...	...	...	...	1	1	...	...	...
Total Other Causes.....	1	1	2	...	3	7	25	35	5	5	...	...	...	...	36	48	84	55	29	...
Total Deaths.....	1	1	2	...	8	11	46	53	7	13	...	...	...	...	64	78	142	99	44	1
Total Births during the month...	4	9	3	3	16	23	68	85	11	7	...	...	...	...	102	127	229	141	88	...

Abstract of Mortuary Report and Percentage of Births and Deaths on the estimated Population, 78,176.

Classes.	Births.		Difference.		Percentage of Births.		Deaths.		Difference.		Percentage of Deaths.	
	May 1880.	June 1880.	Increase.	Decrease.	May 1880.	June 1880.	May 1880.	June 1880.	Increase.	Decrease.	May 1880.	June 1880.
Europeans ...	4	13	9	...	·09	·31	4	2	...	2	·09	·03
East Indians ...	5	6	1	...	·20	·22	3	2	...	1	·12	·09
Musalmáns	37	39	2	...	·24	·25	20	19	...	1	·13	·12
Hindus ...	79	153	74	...	·15	·31	64	99	35	...	·12	·20
Native Christians	16	18	2	...	·21	·24	8	20	12	...	·10	·02
Buddhists ...	...	...	...	...	...	...	...	...	...	...	...	...
Other Classes ...	...	...	...	...	...	...	...	...	...	...	...	...
Total.....	141	229	88	...	·18	·28	99	142	47	4	·12	·18

REMARKS.

There were 142 deaths during the month; 35 from fevers, 21 from bowel-complaints, 2 from accidents and 84 from other causes as detailed in the previous page.

The number of deaths in June 1880 as compared with those in May 1880 and the corresponding month of last year were as follows :—

Of Europeans 2 against 4, Eurasians 2 against 3, Musalmáns 19 against 20, Hindus 99 against 64, and Native Christians 20 against 8, being 43 more than previous month, and 35 in excess of the total number of deaths registered in the corresponding month of last year.

Ages.

Classes.	No. died during the month.	Under 1 year.	1 to 6 years.	6 to 12 do.	12 to 20 do.	21 to 30 do.	31 to 40 do.	41 to 50 do.	51 to 60 do.	Above 60 do.	Total.
Europeans ...	2	...	...	...	...	...	...	1	...	1	2
East Indians ...	2	1	...	...	...	..	1	...	...	...	2
Musalmáns ...	19	3	4	...	..	3	1	1	4	3	19
Hindus ...	99	33	13	1	3	7	8	6	15	13	99
Native Christians.	20	4	4	1	...	4	...	2	2	3	20
Buddhists ...	...	...	...	...	...	...	...	...	...	...	..
Other Classes ...	...	...	...	...	...	...	...	...	...	...	...
Total.....	142	41	21	2	3	14	10	10	21	20	142

Resolution.—Approved.

The following parties have during the past month sought for remission of house assessment due on their premises for the half year ending 31st March 1880 for the reasons stated in their applications, the notice of claim to exemption having been duly given according to Municipal Rules :—

No.	Names of Petitioners.	Amount of Remission. Rs.	A.	P.	House where situated.	Grounds on which remission is claimed.
	1st Division.					
1	Mr. Rangasami Pille ...	0	3	7	No. 34 Mutukarapan Palyam.	Untenanted for 182 days, from 1st October 1879 to 31st March 1880.
2	,, Pillappa	0	1	9	,, 50 Doddigunta ...	,, 182 do do
3	,, Munivenkatappa ...	3	9	4	,, 4 Kensington Road ...	,, 106 days, from 14th January 1880.
4	,, Sambavamúrti Modaliar.	4	5	3	,, 4 Cambridge Road ...	,, 89 days, from 2nd January to 31st March 1880.
5	,, J. Peel	6	2	5	,, 2 Artillery Lines ...	,, 182 days, from 1st October 1879 to 31st March 1880.
6	,, Do	5	4	0	,, 3 do ...	,, 182 do do

No.	Names of Petitioners.	Amount of Remission. Rs.	A.	P.	House where situated.	Grounds on which Remission is claimed.
7	Messrs. Narayinsami Modaliar and Co.	2	4	2	No. 4, Artillery Lines ...	Untenanted for 183 days, from 30th September 1879 to 31st March 1880.
8	Mr. Munisami Chetti ...	0	9	10	„ 5 do ...	„ 124 days, from 28th November 1879 to 31st March 1880.
9	Mrs. E. Burns	17	7	7	„ 1, Old Madras Road ...	„ 212 days, from 1st September 1879 to do
10	Mr. Makalappa... ...	0	1	2	„ 4 do ...	„ 182 days, from 1st October 1879 to 31st March 1880.
11	„ Do	0	1	7	„ 5 do ...	„ 236 days, from 8th August 1879 to 31st March 1880.
12	„ Mahomed Yakub Saib ...	0	4	9	„ 6 do ...	„ 182 days, from 1st October 1879 to 31st March 1880.
13	„ Haji Abdul Rhaiman Khan	0	7	2	„ 19 do ...	„ 182 do do
14	„ Rajaratanam Modaliar...	0	7	2	„ 25 and 2—25, Old Madras Road ..	„ 182 do do
15	„ Narayinsami Modaliar ...	0	3	0	„ 2—35 do ...	„ 182 do do
16	„ Ramalingam ...	3	12	0	„ 36 do ...	„ 182 do do
17	„ Abdul Khader ...	0	3	4	„ A 2-1 and 2-1, Alsur Bazar Street ...	„ 85 do do
18	„ Masalamani Modaliar ...	0	2	5	„ 2—42 do ...	„ 182 do do
19	Do ...	0	2	5	„ 2—43 do ...	„ 182 do do
20	Do ...	0	2	5	„ 3—43 do ...	„ 182 do do
21	„ Ratna Modaliar ...	0	2	1	„ 4—70 do ...	„ 106 do to 14th January 1880.
22	„ Vardaraju Modaliar ...	0	0	5	„ 33—73 do ...	„ 182 do 1st October 1979 to 31st March 1880.
23	Do ...	0	0	5	„ 34—73 do ...	„ 182 do do
24	Do ...	0	0	5	„ 36—73 do ...	„ 182 do do
25	Do ...	0	0	5	„ 39—73 do ...	„ 182 do do
26	Do ...	0	1	2	„ 40—73 to 42—73, Alsur Bazar Street ..	„ 182 do do
27	Do ...	0	0	5	„ 43—73 do ...	„ 182 do do
28	Mr. Pujari Rama ...	0	1	5	„ 90 do ...	„ 111 do 11th Decr. 1879 to 31st March 1880.
29	Do ...	5	1	5	„ 2—90 do ...	„ 111 do do
30	„ Dharmalinga Chetti ...	0	5	11	„ 91 do ...	„ 128 do 24th Nov. 1879 to 31st March 1880.
31	„ V. Kuppusami Modaliar..	0	3	3	„ 14, Old Tér Vithi Street...	„ 82 do 9th January 1880 to 31st March 1880.
32	„ Parthasaradi Modaliar ...	0	3	6	„ 2—18 do ..	„ 133 do 19th Nov. 1879 to 31st March 1880.
33	„ V. D. Nagalinga Modaliar.	0	1	2	„ 2—45 do ...	„ 182 do 1st October 1879 to 31st March 1880.
34	„ Makalappa ...	0	4	8	„ 2—7 D. No. 3 Street ...	„ 236 do. 8th August 1879 to 31st March 1880.
35	„ Vadivelu Modaliar ...	0	12	0	„ 24, Alsur New Street ...	„ 182 days, from 1st Oct. 1879 to 31st March 1880.
36	„ Somanada Modaliar ...	0	1	2	„ 9—2, Bowee Street ...	Do do
37	„ Virasami Pille ...	0	7	2	„ 12—2 do ...	Do do
38	„ Makalappa ...	0	3	2	„ 2—1 C. No. 1 Street ...	„ 236 do 8th Aug. 1879 to do
39	„ Abdul Khadar ...	0	4	9	„ 9 Gowly Street ...	„ 182 do 1st Oct. 1879 do
40	„ Makalappa ...	0	3	2	„ 2—11, Kaliyamma Koil Street ...	„ 236 do 8th Aug. 1879 do
41	„ Krishnaiya ...	0	4	9	„ 48 do ...	„ 180 do 3rd Oct. 1879 to do
42	Do	0	4	9	„ 49 & 50 do ...	Do do
43	Do	0	4	9	„ 52 do ...	Do do
44	„ Chennakristnaiya Chetti...	0	1	2	„ 54 do ..	„ 79 do 7th Oct. 1879 to 24th Dec. 1879.

No.	Names of Petitioners.	Amount of Remission. Rs.	A.	P.	House where situated.	Grounds on which Remission is claimed.
45	Mr. Makalappa ...	0	3	2	No. 2 B. No. 3 Street ...	Untenanted for 236 days, from 8th August 1879 to 31st March 1880.
46	„ B. Lingaiya ...	0	7	2	„ 11 do ...	„ 182 do 1st Oct. 1879 do
47	Do	0	4	9	„ 12 do ...	Do do
48	„ Haji Abdul Rahiman Khan ...	0	2	5	„ 4 B. No. 5 Street ...	Do do
49	Do ...	0	2	5	„ 5 do ...	Do do
50	Do ...	0	9	7	„ 6 do ...	Do do
51	„ Yakub Saib ...	0	1	2	„ 26 B. No. 6 Street ...	Do do
52	Do ...	0	1	2	„ 27 do ...	Do do
53	Do ...	0	1	2	„ 28 do ...	Do do
54	Do ...	0	1	2	„ 29 do ...	Do do
55	Do ...	0	1	2	„ 30 do ...	Do do
56	„ Krishnaiya ...	0	4	9	„ 41 do ...	„ 180 do 3rd Oct. 1879 to 31st March 1880.
57	„ Sundramma ...	0	3	8	„ 3—11 E. No. 3 Street...	„ 92 do 1st Oct. 1879 to 31st Dec. 1879.
58	„ Mallapa ...	0	8	9	„ 5 G. No. 5 Street ...	„ 166 do 17th Oct. 1879 to 31st March 1880.
59	„ Makalapa ...	0	3	2	„ 13—G. No. 8 Street ...	„ 236 do 8th Aug. 1879 do
60	„ G. Venkatrayalu Chetti...	4	13	7	„ 1 Alsur road ...	„ 89 do 2nd Jan. 1879 do
61	Mrs. Lacey ...	9	0	0	„ 4 do ...	„ 182 do 1st Oct. 1879 do
62	Do ...	3	12	0	„ 2—4 do ...	Do do
63	Mr. E. A. Bertie Agent ...	6	2	5	„ 5 do ...	Do do
64	„ N. Gopalkrishnaiengar ...	6	14	5	„ 6 do ...	Do do
65	Messrs. Abraham and Co. ...	6	2	9	„ 7 do ...	„ 78 do 13th Jan. 1879 do
66	Mr. Naniappa ...	3	0	0	„ 1 Compensation Road ...	„ 182 do 1st Oct. 1879 do
67	„ Haji Syed Assen ...	10	2	2	„ 2—1 Dickinson Road ...	„ 106 Do
68	„ P. V. Jagannadarao Naidu ...	0	10	11	„ 5—4 do ...	„ 166 do 17th Oct. 1879 do
69	Do ...	0	4	4	„ 6—4 do ...	Do do
70	Do ...	0	7	5	„ 7—4 do ...	„ 226 do 18th Aug. 1879 do
71	Do ...	0	2	5	„ 8—4 do ...	„ 182 do 1st Oct. 1879 do
72	Do ...	0	7	2	„ 10—4 do ...	Do do
73	Do ...	0	6	7	„ 11—4 do ...	„ 166 do 17th Oct. 1879 do
74	Do ...	0	7	5	„ 15—4 do ...	„ 226 do 18th Aug. 1879 do
75	„ W. W. Gaunt, Agent ...	6	0	0	„ 8 do ...	„ 182 do 1st Oct. 1879 do
	Rs.....	112	14	1		
	2nd Division.					
76	Mr. Seshachalam, Modaliar ...	9	2	5	No. 3 Commissariat Lane ...	„ 182 days from 1st October 1879 to 31st March 1880.
77	„ H. Dunhill...	3	15	10	„ 3 Primrose Lane ...	„ 85 days from 6th January to 31st March 1880.
78	„ D. Eppinger ...	14	6	5	„ 4 Do ...	„ 182 days from 1st October 1879 to 31st March 1880.
79	„ N. R. Bain ...	12	0	0	„ 6 Brunton Road ...	Do do
80	„ L. Fegradoe ...	1	3	2	„ 12—1 Castle Street ...	Do do
81	„ C. Muttusami Pille ...	1	3	5	„ 4 Do ...	„ 123 days from 1st October to 31st January 1880.
82	„ L. Fegradoe ...	0	4	10	„ 7 Do ...	„ 61 days from 1st October to 30th November 1879.
83	do ...	0	5	3	„ 10 Do ...	„ 79 days from 12th January to 31st March 1880.
84	„ Chikkappa Chetti ...	0	4	2	„ 9 Wood Street ...	„ 63 days from 28th January to 31st March 1880.

244

No.	Names of Petitioners.	Amount of Remission. Rs.	A.	P.	House where situated.	Grounds on which Remission is claimed.
85	Mr. Chikkappa Chetti ...	1	3	2	No. 11 Wood Street ...	Untenanted for 66 days from 1st October 1879 to 5th December 1879.
86	Rangamma	1	4	4	„ 15 Do ...	„ 154 days from 29th October 1879 to 31st March 1880.
87	Mr. Virabhadra Chetti ...	0	11	3	„ 3—14 Victoria Road ...	„ 170 days from 13th October 1879 to 31st March 1880.
88	„ B. Ramalingam ...	1	5	3	„ 2—3 Oosur Road ...	„ 179 days from 2nd October 1879 to 29th March 1880.
89	„ R. B. Govindu Chetti ...	1	8	0	„ 6 Brigade Road ...	„ 182 days from 1st October 1879 to 31st March 1880.
80	„ J. Steel	2	14	8	„ 58 Do ...	„ 136 days from 4th November 1879 to 31st March 1880.
91	„ Virabhadra Chetti ...	0	13	5	„ 2—12 Palliyar Street...	„ 170 days from 13th October 1879 to 31st March 1880.
92	Do ...	0	9	7	„ 35 Do ...	„ 182 days from 1st October 1879 to 31st March 1880.
93	„ A. Vijayarangam Modr...	0	7	2	„ 10 H. No. 1 Street ...	Do do
94	„ Butcher Karim Saib ...	0	2	4	„ 8 J. No. 3 Street ...	„ 175 days from 8th October 1879 to 31st March 1880.
95	„ Badé Saib ...	0	2	5	„ 10 Do ...	„ 182 days from 1st October 1879 to 31st March 1880.
96	„ Abdulla Saib ...	0	7	2	„ 19 Do ...	Do do
	Rupees...	54	6	3		
	3rd Division.					
97	Mr. E. A. Bertie ...	15	2	0	„ 13 South Parade Road ...	Do do
98	„ A. B. Annamale ...	9	14	5	„ 16 Do ...	Do do
99	„ Alli Askar Saib ...	16	10	5	„ 17 Do ...	Do do
100	„ E. A. Bertie ...	6	8	5	„ 22 Do ...	„ 120 days from 2nd December 1879 to 31st March 1880.
101	„ B. Srinivasiengar ...	11	15	6	„ 25 Do ...	„ 137 days from 1st October 1879 to 14th February 1880.
102	„ B. Garudaiengar ...	12	7	2	„ 27 Do ...	„ 182 days from 1st October 1879 to 31st March 1880.
103	„ E. A. Bertie ...	10	10	11	„ 2 Residency Road ...	„ 120 days from 2nd December 1879 to 31st March 1880.
104	„ Mahomed Saliha ...	4	4	4	„ 3 Do ...	„ 74 days from 17th December 1879 to 28th February 1880.
105	„ E. A. Bertie ...	6	14	5	„ 18 Do ...	„ 182 days from 1st October 1879 to 31st March 1880.
106	„ Dunhill	1	10	5	„ 22 Do ...	„ 100 days from 22nd December 1879 to 31st March 1880.
107	„ A. Devereux ...	4	11	10	„ 3 Museum Road ...	„ 125 days from 27th November 1879 to 31st March 1880.
108	Do ...	2	2	7	„ 2—3 Do ...	Do do
109	Do ...	8	3	11	„ 4 Do ...	Do do
110	„ E. A. Bertie ...	6	0	7	„ 1 Church Street ...	„ 120 days from 2nd December 1879 to 31st March 1880.
111	Messrs. Narayansami Mdr. & Co	4	8	0	„ 7 Do ...	„ 182 days from 1st October 1879 to 31st March 1880.
112	Mr. W. Farmer ...	7	10	5	„ 8 Do ...	Do do
113	„ A. B. Thomson ...	4	13	3	„ 5 Rest-House Lane ...	„ 189 days from 24th September 1879 to 31st March 1880.
114	Messrs. Jaun Mahomed & Co	4	8	0	„ 6 Do ...	„ 182 days from 1st October 1879 to 31st March 1880.
115	„ Arbuthnot & Co ...	15	13	1	„ 1 Richmond Road ...	„ 123 days from 1st October 1879 to 31st January 1880.
116	Mr. E. A. Bertie ...	8	6	5	„ 4 Do ...	„ 182 days from 1st October 1879 to 31st March 1880.

No.	Names of Petitioners.	Amount of Remission. Rs.	A.	P.	House where situated.	Grounds on which Remission is claimed.
117	Mr. B. Ramalingam ...	7	10	5	No. 5 Richmond Road ...	Untenanted for 182 days from 1st October 1879 to 31st March 1880.
118	„ J. A. Gow	3	14	9	„ 6 Do ...	„ 67 days from 24th January to 31st March 1880.
119	Messrs. Narayansami Mdr. & Co	2	10	2	„ 9 Do ...	„ 123 days from 1st October 1879 to 28th February 1880.
120	Mr. W. H. Edwards ...	1	6	2	„ 3 King Street ...	„ 100 days from 22nd December 1879 to 31st March 1880.
121	„ Butler Ponnappa ...	0	4	9	„ 6 Arab Lines, A, Street	„ 182 days from 1st October 1879 to 31st March 1880.
122	„ Kuppusami Chetti ...	0	1	11	„ 3—8 Do C. do ...	„ 99 days from 22nd November 1879 to 28th February 1880.
123	Messrs. Narayansami Mdr. & Co	3	1	1	„ 6 Wellington Street ...	„ 149 days from 3rd November 1879 to 31st March 1880.
124	Mr. J. Mergler... ...	4	11	7	„ 9 Do ...	„ 182 days from 1st October 1879 to 31st March 1880.
125	„ Mergler	3	0	0	„ 2 Alexandra Street ...	Do do
126	„ J. W. Blakie ...	1	4	11	„ 9 Do ...	„ 106 days from 18th October 1879 to 31st Jan. 1880.
127	Mrs. Edwards	3	12	0	„ 1 Kingston Cross Road.	„ 182 days from 1st October 1879 to 31st March 1880.
128	Mr. Kuppusami Chetti ...	2	5	8	„ 1 Leonard Lane ...	„ 130 days from 22nd November 1879 to 31st March 1880.
129	„ Butler Ponnappa ...	2	11	2	„ 2—1 Longford Road ...	„ 182 days from 1st October 1879 to 31st March 1880.
130	„ Eppinger	8	6	5	„ 2—3 Lal-Bagh Road ...	Do do
131	Do ...	9	2	5	„ 4 Do ...	Do do
132	Mrs. H. W. Birch ...	8	4	11	„ 5 St. Marks Road ...	„ 180 days from 3rd October 1879 to 31st March 1880.
133	Mr. R. Stephenson, Agent ...	16	5	5	„ 7 Do ...	„ 187 days from 26th September 1879 to 31st March 1880.
134	„ C. Venkatasami ...	1	2	0	„ 6 Fort H. Street ...	„ 182 days from 1st October 1879 to 31st March 1880.
135	„ Muttusami Naidu ...	0	7	2	„ 7 Do ...	Do do
136	„ T. Moore	1	6	11	„ 13 Do ...	„ 87 days from 20th November 1879 to 14th February 1880.
	Rupees.....	245	1	11		
	4th Division.					
137	Messrs. Narayansami Mdr. & Co	3	12	0	„ C. 30 Dispensary Road ...	„ 182 days from 1st October 1879 to 31st March 1880.
138	Do ...	3	12	4	„ E. 30 Do ...	„ 183 days from 30th September 1879 to 31st March 1880.
139	Mr. Jahangirkhan ...	1	12	9	„ 31 Do ...	„ 182 days from 1st October 1879 to 31st March 1880.
140	„ Velayuda Modaliar ...	0	10	7	„ 47 & 48 Do ..	„ 107 days from 15th December 1879 to 31st March 1880.
141	„ Chellaperumal Modaliar	0	12	0	„ 63 Do ...	„ 182 days from 1st October 1879 to 31st March 1880.
142	Do ...	0	12	0	„ 64 Do ...	Do do
143	Do ...	0	9	7	„ 65 Do ...	Do do
144	Messrs. Narayan Chetti & Co.	0	7	2	„ 95 Do ...	Do do
145	Do ...	0	1	2	„ 2—95 Do ...	Do do
146	Do ...	0	1	2	„ 3—95 Do ...	Do do
147	Do ...	0	1	2	„ 4—95 Do ...	Do do
148	Do ...	0	1	2	„ 5—95 Do ...	Do do
149	Do ..	0	1	2	„ 6—95 Do ...	Do do

No.	Names of Petitioners.	Amount of Remission. Rs.	A.	P.	House where situated.	Grounds on which Remission is claimed.
150	Messrs. Narayan Chetti & Co.	0	1	2	No. 7—95 Dispensary Road	Untenanted for 182 days from 1st October 1879 to 31st March 1880.
151	Do ...	0	1	2	,, 8—95 Do ...	Do do
152	Mr. Gadi Venkatrayalu Chetti.	1	13	4	,, 1 Commercial Street ...	,, 74 days from 17th January to 31st March 1880.
153	Do ...	0	8	10	,, 2 Do ...	Do do
154	,, Singaravelu Modaliar ...	3	0	0	,, 5 Do ...	,, 182 days from 1st October 1879 to 31st March 1880.
155	,, V. Dorasami Modaliar...	1	12	9	,, 6 Do ...	Do do
156	Messrs. Narayan Chetti ...	1	3	2	,, 22 & 23 Do ...	Do do
157	Do ...	0	10	0	,, 24 & 25 Do ...	Do do
158	Mr. V. Krishnappa Chetti ...	0	14	5	,, 28 Do ...	Do do
159	,, Haji Mahomed Rahimtula Sait	1	8	0	,, 33 Do ...	Do do
160	,, Gopalaiengar ...	1	8	0	,, 52 Do ...	Do do
161	Messrs. Narayansami Modr. &Co	1	8	0	,, 91 Do ...	Do do
162	Mr. Dommanna Chetti ...	1	3	2	,, 2—113 Do ...	Do do
163	,, Kadewale Ibram Saib ..	0	14	5	,, 170 & 171 Do ...	Do do
164	Mr. Ramji Rao... ...	0	14	5	,, 173 and 174 Commercial Street	Do do
165	Messrs. Narayansami Modr. &Co	1	8	0	,, 176 Do ...	Do do
166	Do ...	0	12	0	,, 177 Do ...	Do do
167	Mr. Haji Mitta Kasim Sait ...	2	8	0	,, 186 & 187 Do ...	Do do
168	,, Mannaji Rao ...	0	9	10	,, 204 Do ...	,, 106 days from 16th December 1879 to 31st March 1880.
169	,, Ramji Rao... ...	0	7	2	,, 210 Do ...	,, 182 days from 1st Oct. 1879 to 31st March 1880.
170	,, Haji Jaun Mahomed Sait.	0	7	2	,, 2—70 Ibram Saib Road ...	,, 182 days from 1st Oct. 1879 to 31st March 1880.
171	,, R. B. Govindu Chettiyar.	0	12	0	,, 43 Virapille Street ...	,, 182 days from 1st Oct. 1879 to 31st March 1880.
172	,, Gadi Sinaiya Chetti ...	0	3	9	,, 75 Do ...	,, 112 days from 10th December 1879 to 31st March 1880.
173	Messrs. Narayansami Modr. &Co	1	3	4	,, 20 Latchmana Modr. Street	,, 183 days from 30th September 1879 to 31st March 1880.
174	Do ...	0	2	5	,, 2—20 Do ...	,, 183 days from 30th September 1879 to 31st March 1880.
175	,, Narayan Chetti & Co. ...	0	3	7	,, 7 G. No. 1 Street ...	,, 182 days from 1st Oct. 1879 to 31st March 1880.
176	Mr. A. Pilliyar Modr. ...	1	8	0	,, 8 Narayan Pille Street.	Do do
177	,, Mada Narayan Chetti ...	0	12	0	,, 16 Do ...	Do do
178	,, Kurthan Ahmed Saib ...	0	14	5	,, 75 Do ...	Do do
179	,, C. Scott	1	8	0	,, 114 Do ...	Do do
180	,, Manyar Kamal Saib ...	1	10	5	,, 206 Do ...	Do do
181	Do ..	1	3	2	,, 207 Do ...	Do do
182	,, Haji Mahomed Rahimtulla Sait ...	0	12	0	,, 88 and 89 Labbe Masjid Street	Do do
183	,, Ramalingam ...	2	4	0	,, 1 Old Poor House Road.	Do do
184	,, Annappa	0	9	7	,, 31 and 231 Do ...	Do do
185	,, Gaus Saib ...	0	2	5	,, 3—88 Do ...	Do do
186	Do ...	0	2	5	,, 4—88 Do ...	Do do
187	,, Muttusami Pille ...	0	9	7	,, 107 Old Poor House Road.	Do do
188	,, Abdulkudus Khadri Khaji Saib	5	13	7	,, 238 Do ...	Do do
189	,, Annappa	0	12	0	,, 2 Minakshi Koil Street...	Do do
190	,, Timappa	0	7	11	,, 15—5 New Market Road	,, 121 days from 1st December 1879 to 31st March 1880.
191	,, Hussen Saib ...	0	9	7	,, 19—5 Do ...	,, 182 days from 1st October 1879 to 31st March 1880.
192	Do ...	0	3	7	,, 20—5 Do ...	Do do

No.	Names of Petitioners.	Amount of Remission. Rs.	A.	P.	House where situated.	Grounds on which Remission is claimed.
193	Mr. Kuppusami Chetti ...	0	1	8	No. 35 Dharmaraja Street ...	Untenanted for 61 days from 1st Oct. to 30th Nov. 1879.
194	Messrs. Narayan Chetty & Co.	0	2	5	„ 83 Do ...	„ 182 days from 1st October 1879 to 31st March 1880.
195	Do ...	0	2	5	„ 84 Do ...	Do do
196	Do ...	0	2	5	„ 85 Do ...	Do do
197	Mr. Karthan Ahamed Saib ...	0	1	2	„ 2—51 Chapparcherri ...	Do do
198	Do ...	0	7	2	„ 55 Do ...	Do do
199	„ Shek Mohadin ...	0	3	7	„ 31 Makan Street ...	Do do
200	Do ...	0	3	7	„ 2—31 Do ...	Do do
201	Do ...	0	4	9	„ 32 Do ...	Do do
202	„ Khaja Mahomed ...	0	6	0	„ 52 Do ...	Do do
203	„ Shek Farid ...	0	2	6	„ 13 Police Lane B. ...	„ 76 days from 15th Jan. to 31st March 1880.
204	„ Munivenkatappa ...	0	3	7	„ A. 2—5 Armstrong Road	„ 182 days from 1st October 1879 to 31st March 1880.
205	„ A. Virasami Modr. ...	0	3	0	„ 38 Do ...	Do do
206	Do ...	0	3	0	„ 2—38 Do ...	Do do
207	Messrs. Narayansami Mdr. & Co	0	2	5	„ 43 Do ...	„ 183 days from 30th September 1879 to 31st March 1880.
208	Mr. Kandasami Modr. ...	0	4	9	„ 8 Sami Modr. Street ...	Do do
209	Messrs. Narayansami Mdr. & Co.	0	14	5	„ 20 Sabhapati Lane ...	„ 182 days from 1st October 1879 to 31st March 1880.
210	Mr. Munivenkatappa ...	0	2	5	„ 6 Clarks Petta C. ...	Do do
211	Messrs. Narayansami Mdr. & Co.	1	8	0	„ 6 Cavalry Road ...	Do do
212	Mr. Ismal Saib	2	4	0	„ 17 Do ...	Do do
213	Messrs. Narayansami Mdr. & Co.	1	6	11	„ 28 Do ...	„ 183 days from 30th September 1879 to 31st March 1880.
214	Mr. P. V. Jaganathrao Naidu	0	3	0	„ 85 Do ...	„ 182 days from 1st October 1879 to 31st March 1880.
215	„ Adinarayana Naidu ...	0	3	1	„ 86 Do ...	„ 187 days from 26th September 1879 to 31st March 1880.
216	„ Haji Ismal Saib ...	0	9	7	„ 3—220 Do ...	„ 182 days from 1st October 1879 to 31st March 1880.
217	Do ...	1	4	0	„ 222 Do ...	Do do
218	„ Ummar Ismal Saib ...	0	2	5	„ B. 222 Do ...	Do do
219	Messrs. Narayansami Mdr. & Co	3	12	4	„ 224 Do ...	„ 183 days from 30th September 1879 to 31st March 1880.
220	Do ...	1	8	0	„ 225 Do ...	„ 182 days from 1st October 1879 to 31st March 1880.
221	Do ...	3	9	7	„ 226 Do ...	Do do
222	Do ...	3	0	0	„ 228 Do ...	Do do
223	Do ...	4	8	5	„ 230 Do ...	„ 183 days from 30th September 1879 to 31st March 1880.
224	Mr. P. V. Jaganathrao Naidu	0	0	7	„ 1 N. No. 3 Street ...	„ 182 days from 1st October 1879 to 31st March 1880.
225	Do ...	0	3	0	„ 4 Do ...	Do do
226	Do ...	0	5	11	„ 16 Do ...	„ 226 days from 18th August 1879 to 31st March 1880.
227	Do ...	0	1	9	„ 10 O. No. 1 Street ...	„ 182 days from 1st October 1879 to 31st March 1880.
228	„ A. J. King	2	12	10	„ 3 St. John's Road ...	„ 170 days from 13th October 1879 to 31st March 1880.
229	„ Madura Chetti ...	7	10	5	„ 9 Do ...	„ 182 days from 1st October 1879 to 31st March 1880.
230	„ V. Singaravelu Modr. ...	7	10	5	„ 13 Do ...	Do do
231	Do ...	3	0	5	„ 14 Do ...	„ 102 days from 27th October 1879 to 5th February 1880.
232	„ R. B. Govindu Chetti ...	11	6	5	„ 15 Do ...	„ 182 days from 1st October 1879 to 31st March 1880.

No.	Names of Petitioners.	Amount of Remission. Rs.	A.	P.	House where situated.	Grounds on which Remission is claimed.
233	Mr. Shanbhog Naranappa ...	3	2	5	„ 1 Tank Lane ...	Untenanted for 191 days from 22nd September 1879 to 31st March 1880.
234	„ B. Lingaiya ...	2	4	10	„ 2 Do ...	„ 133 days from 19th November 1879 to 31st March 1880.
235	„ Seshachalam Modaliar ...	4	14	4	„ 3 Osborn Road ...	„ 99 days from 23rd December 1879 to 31st March 1880.
236	Do ...	4	9	2	„ 2—3 Do ...	Do do
237	„ Muniyappa Mestri ..	0	4	9	„ 2—33 Sepping's Road..	„ 182 days from 1st October 1879 to 31st March 1880.
238	Do ...	0	4	9	„ 34 Do ...	Do do
239	„ Jamal Saib ...	0	3	8	„ 2 S. No. 1 Street ...	„ 69 days from 22nd January to 31st March 1880.
240	Do ...	0	2	10	„ 3 Do ...	Do do
241	„ Mandi Nanjappa ...	0	1	8	„ 4 Do ...	„ 121 days from 1st December 1879 to 31st March 1880.
242	Do ...	0	6	5	„ 5 Do ...	Do do
243	„ Ramasami Bhatlu ...	0	4	5	„ 10 S. No. 4 Street ..	„ 111 days from 11th December 1879 to 31st March 1880.
244	„ Rustum Khan ...	0	2	5	„ 8 R. No. 1 Street ...	„ 182 days from 1st October 1879 to 31st March 1880.
245	„ V. Dorasami Modaliar ...	0	2	2	„ 2—13 Do ...	„ 221 days from 23rd August 1879 to 31st March 1880.
246	Do ...	0	2	2	„ 3—13 Do ...	Do do
247	Do ...	0	2	2	„ 4—13 Do ...	Do do
248	Do ...	0	1	5	„ 5—13 Do ...	Do do
249	„ Fakaruddin ...	1	3	2	„ 6 R. No. 3 Street ...	„ 182 days from 1st October 1879 to 31st March 1880.
250	„ Gaus Saib ...	0	3	0	„ 33 L. No. 10 Street ...	Do do
251	„ B. Virasami Chetti ...	0	2	5	„ 2—7 Arunachala Mdr. Street	Do do
252	Do ...	0	2	5	„ 5—7 Do ...	Do do
253	Do ...	0	2	5	„ 6—7 Do ...	Do do
254	„ Abdulkhader ...	0	4	9	„ 16 Do ...	Do do
255	„ Arunachala Modaliar ...	0	4	9	„ 17 Do ...	Do do
256	„ Muniyappa Mestri ...	0	2	5	„ 12 Kumbara Street K. ...	Do do
257	„ C. Krishnasami Modaliar .	0	5	0	„ 17 Do ...	„ 152 days from 31st October 1879 to 31st March 1880.
258	„ Biram Saib ...	0	3	0	„ 17—43 Timmaiya Road .	„ 182 days from 1st October 1879 to 31st March 1880.
259	Mr. Ahamed Sheriff ...	0	12	0	„ 18—43 Timmaiya Road .	„ 182 do do do
260	„ W. W. Gaunt ..	3	12	0	„ 44 Do ..	„ 182 do do do
261	„ Mandi Rangaiya ...	0	5	1	„ 4 Cooks Road A. ...	„ 190 do 23rd Sept. 1879 do
262	„ Do ...	0	7	7	„ 2-4 Do ...	„ 190 do do do
263	„ Do ...	0	6	4	„ 3-4 Do ..	„ 190 do do do
264	„ Do ..	0	2	7	„ 4-4 Do ...	„ 190 do do do
265	„ H. W. O'Bryan ...	0	12	1	„ 50 Bamboo Cherry ..	„ 114 do 8th Dec. 1879 do
266	„ Baker	1	3	2	„ 148 Do ...	„ 182 do 1st Oct. 1879 do
267	Messrs. Narayansami Modaliar & Co. ...	3	12	11	„ 13 St. John Hill Church Road ...	„ 149 do 3rd Nov. 1879 do
268	Mr. Vijayaranga Modaliar ...	6	0	0	„ 4 Wheeler Road ...	„ 182 do 1st Oct. 1879 do
269	„ Eppinger ...	3	1	9	„ 2-4 Do ...	„ 82 do 9th Jan. do
270	„ Nasim Benki Navab ...	7	9	10	„ 5 Do ...	„ 140 do 1st Oct. 1879 to 17th Feb. 1880.
271	„ Seshachala Modaliar ...	6	14	5	„ 2 Coles Road ...	„ 182 do 1st Oct. 1879 to 31st March 1880.
272	„ Eppinger ...	4	7	4	„ 2 Spencer Road ...	„ 82 do 9th Jan. do
273	„ Do ...	11	8	7	„ 3 Do ...	„ 175 do 8th Oct. 1879 do
274	„ W. Garrett ..	6	2	5	„ 5 Do ...	„ 182 do 1st Do do
275	„ Eppinger ...	8	6	5	„ 2 Saunders Road ...	„ 182 do Do do
276	„ Chinnaji Rao ...	1	5	8	„ 3 Haines Road ...	„ 83 do 8th Jan. do
277	„ H. Baker ..	3	9	9	„ 13 Do ...	„ 146 do 6th Nov. 1879 do

No.	Names of Petitioners.	Amount of Remission. Rs.	A.	P.	House where situated.	Grounds on which Remission is claimed.
278	Mr. Royle ...	4	10	5	No. 3 Saunders Road ...	Untenanted for 182 days from 1st Oct. 1879 to 31st March 1880.
279	„ D. Eppinger ...	8	12	9	„ 1 Promenade Road ...	„ 175 do 8th Oct. 1879 do
280	„ R. B. Govindu Chettiyar ..	5	6	5	„ 2 Tannery Road ...	„ 182 do 1st Oct. 1879 do
281	„ Karim Saib ...	2	11	4	„ 1 Do Cross C. Street ...	„ 219 do 25th Aug. 1879 do
282	„ Sundralli Saib ...	1	3	2	„ 2 Do do ...	„ 182 do 1st Oct. 1879 do
283	„ Karim Saib ...	0	8	8	„ 3 Do do ...	„ 219 do 25th Aug. 1879 do
284	„ N. R. Bain ...	2	4	0	„ 2—7 Do do ...	„ 182 do 1st Oct. 1879 do
285	„ Karim Saib ...	0	13	0	„ 10 Do do ...	„ 219 do 25th Aug. 1879 do
286	„ Mahomed Khan ...	0	6	0	„ 11 Butcher Street C. ...	„ 182 do 1st Oct. 1879 do
	Rupees.....	238	11	11		
	5th Division.					
287	Mr. Husen Saib ...	0	10	9	No. 1 Broadway ...	„ 182 do 1st Oct. 1879 do
288	„ Do ...	0	4	9	„ 3 Do ...	„ 182 do do do
289	„ Do ...	0	4	9	„ 5 Do ...	„ 182 do do do
290	„ Ramalingam ...	0	4	9	„ 89 Do ...	„ 182 do do do
291	„ Haji Mitta Kasim Sait ...	1	8	0	„ 116 Do ...	„ 182 do do do
292	„ Bavadin ...	0	9	7	„ 4 Noah Street ...	„ 182 do do do
293	„ Butcher Alli Saib ...	0	1	3	„ 14 E. No. 8 Street ...	„ 76 do 15th Jan. do do
294	„ Do ...	0	2	0	„ 16 Do ...	„ 76 do 15th do do
295	„ Aga Alli Asker ...	17	0	9	„ 2 Cubbon Road ...	„ 197 do 16th Sept. 1879 do
296	Mrs. C. Fegradoe ...	6	0	1	„ 5 Do ...	„ 120 do 2nd Dec. 1879 do
297	Mr. Devereux ...	12	0	0	„ 6 Do ...	„ 182 do 1st Oct. 1879 do
298	„ Ramalingam ..	9	2	5	„ 10 Do ...	„ 182 do do do
299	„ Seshachela Modaliar ...	3	13	10	„ 18 Do ...	„ 92 do do 31st Dec. 1879.
300	„ D. Eppinger ...	3	2	5	„ 5 Infantry Road ...	„ 182 do do 31st March 1880.
301	„ N. R. Bain ...	6	12	7	„ 7 Do ...	„ 179 do 4th Oct. 1879 do
302	„ T. Khader Saib ...	1	8	11	„ 8 Do ...	„ 61 do 1st Oct. 1879 to 30th November 1879.
303	Mrs. A. Taylor ...	7	11	1	„ 15 Do ...	„ 153 do 30th Oct. 1879 to 31st March 1880.
304	Mr. Haji Syed Assen ...	7	10	5	„ 19 Do ...	„ 182 do 1st Oct. 1879 do
305	Mrs. Narayansami Modaliar & Co. ...	7	10	5	„ 4 Central Street ...	„ 182 do do do
306	Mr. B. Ramalingam ...	0	8	1	„ 8 Hospital Road ...	„ 61 do 1st Oct. 1879 to 30th November 1879.
	Rupees.....	86	14	10		
	6th Division.					
307	Mr. A. Plumb ...	3	1	9	„ 6 Bensons Road ...	„ 105 do 17th Dec. 1879 to 31st March 1880.
308	„ W. W. Gaunt ...	1	12	8	„ 3 Do ...	„ 62 do 1st Oct. 1879 to 1st December 1879.
309	„ Do ...	1	10	2	„ 4 Bensons Cross Road...	„ 64 do 27th Jan. to 31st March 1880.
310	„ Welsh ...	8	6	5	„ 3 Millers Road ...	„ 182 do 1st Oct. 1879 do
311	„ Do ...	6	14	5	„ 2—3 Do ...	„ 182 do do do
312	Messrs. Porter and Co. ...	12	8	9	„ 5 Do ...	„ 203 do 10th Sept. 1879 do
313	Mr. R. Lewis ...	4	6	5	„ 3 Nundydroog Road ...	„ 116 do 6th Dec. 1879 do
314	Mrs. Cleveland ...	12	14	5	„ 2 Túmkúr Road ...	„ 182 do 1st Oct. 1879 do
315	Mr. Alli Asker Saib ...	14	6	5	„ 5 High Ground ...	„ 182 do do do

No.	Names of Petitioners.	Amount of Remission. Rs.	A.	P.	House where situated.	Grounds on which Remission is claimed.
316	Mr. Aga Jaun. ...	8	1	2	No. 7 High Ground ...	Untenanted for 102 days from 20th Dec. 1879 to 31st March 1880.
317	„ Do ...	5	13	3	„ 2 Avenue Road ...	„ 70 do 21st Jan. do
318	„ J. Dias ...	8	9	4	„ 4 Do ...	„ 137 do 15th Nov. 1879 do
319	Mrs. N. Page ...	10	10	6	„ 6 Do ...	„ 128 do 24th Nov. 1879 do
320	Messrs. Abraham & Co. ...	10	6	9	„ 9 Do ...	„ 109 do 13th Dec. 1879 do
321	Mr. Aga Jaun ...	14	6	5	„ B 1 Cunningham Road...	„ 182 do 1st Oct. 1879 do
322	„ Mariyappa Mestri ...	8	0	7	„ 1 Do ...	„ 92 do do 31st Dec. 1879.
323	„ Aga Jaun ...	18	10	9	„ 2 Do ...	„ 236 do 8th Aug. 1879 to 31st March 1880.
324	„ Chikkanna Mestri ...	13	8	0	„ 3 Do ...	„ 182 do 1st Oct. 1879 to 31st March 1880.
325	„ Alli Asker Saib ...	27	14	5	„ 5 Bellary Road ...	„ 182 do do do
326	„ Aga Jaun ...	10	5	5	„ 6 Do ...	„ 165 do 18th Oct. 1879 to 31st March 1880.
327	„ Phaure, Agent ...	12	0	0	„ 1 Cathcart Road ...	„ 182 do 1st Oct. 1879 do
328	„ Aga Alli Asker ...	14	6	5	„ 3 Do ...	„ 182 do do
	Rupees... ..	228	14	5		
	3rd Division.					
329	Mr. Aga Jaun ...	0	15	8	„ 14 Serpentine Street ...	„ 70 do 21st Jan. 1880 to 31st March 1880.
	Total Rupees.....	967	15	1		

Resolution—Passed.

List of Agreements entered into by the President.

3. List of agreements entered into by the President during the month of June 1880 :—

No.	Subject.
1	Agreement executed by Siddanna for revetting channel bank, Benson's Cross Road.
2	Do by Appanna for construction of tunnels in the Cleveland Town.
3	Do by Pillappa for supplying gravel for roads.
4	Do by Amir Saib for dismantling V Section drain and constructing box drain.

Resolution.—Approved.

List of Estimates sanctioned by the President.

4. List of estimates sanctioned by the President during the month of June 1880.

No.	Name of work.	Amount sanctioned.		
25	Estimate for constructing V Section drain in a lane in Púl Bavadi Street, Old Korcharpalya.	17	0	0

Resolution.—Approved.

Pensions to Municipal Employés.

5. Read—Proceedings of the Chief Commissioner of Mysore, No. 1525-34—Ml. 66, dated 18th June 1880, regarding the eligibility of Municipal employés for pension.

Resolution.—That a gratuity be recommended to be granted to Mahomed Husen as previously proposed in Proceedings of the Municipal Commissioners under date the 24th June 1879.

Budget Estimate for 1880—81.

6. Read.—Proceedings of the Chief Commissioner of Mysore, No. 1634-5—Ml. 74, dated 22nd June 1880, conveying certain remarks on the revised budget estimate of the Cantonment Municipal Commission for 1880—81.

Resolution.—It is resolved that the services of the present Overseer be retained but on a reduced salary of Rs. 30 per mensem.

Proposed General Census for Bangalore.

7. Read—Proceedings of the Chief Commissioner of Mysore, No. 1376—Ml. 228, dated 11th June 1880, issuing instructions as to the method and preparatory measures necessary for taking a General Census in Bangalore.

Resolution.—To be recorded.

Exemption of certain classes from Municipal taxation.

8. Read—Circular No. 1633—Ml. 73, dated 21st June 1880, from the Secretary to the Chief Commissioner in the Revenue Department, forwarding copy of orders from the Government of India relating to the exemption of certain classes from Municipal taxes when on duty in Cantonments where a Municipal Act is in force.

Resolution.—To be recorded.

Proposed Bye-law for the storage of Kerosine-oil.

9. Read—Letter dated 10th July 1880, from T. T. Leonard, Esq., Municipal Commissioner, No. 5 Division, suggesting the introduction of a Bye-law restricting the storage of kerosine-oil in places other than those sanctioned by the Municipality.

Resolution.—That the further consideration of Mr. Leonard's letter be deferred to the next meeting of the Commissioners to enable information being had as to what rules obtain on this head in other Municipalities.

J. H. ORR,
President, Cantonment Muni. Commn.

252

Season Report of the Kolar District for the month of June 1880.

Rain-fall.—The average rain-fall during the month was 1 inch and 92¾ cents. Want of more rain is still felt.

Lands.—Land assessed at Rs. 765—6—9 is taken up for cultivation, while that relinquished amounts to Rs. 26—13—0.

Seeds sown.—Ragi, ballar, tuvar, saije, harka, and superior sesamum.

Crops.—Withering in some parts from want of rain.

Health.—Sore-eyes and fever yet prevail.

Casualties among Cattle.—

	In May 1880.	In June 1880.
Cows and bulls	3,964	3,350
Buffaloes	16,79	1,351
Sheep and goats	2,242	2,074
Horses	21	18
Asses ..	49	38
Total....	7,955	6,831

C. SOOB RAO,
For Dy. Commr.

Official Publications.

MYSORE INSCRIPTIONS,

Translated for Her Majesty's Secretary of State for India,

By LEWIS RICE, M. R. A. S.,

Director of Public Instruction, Mysore and Coorg.

Price Rs. 10.

May be had on application to the *Book Depository, North Parade, Bangalore,* or of *Messrs. Trübner & Co., London.*

Also, by the same,

MYSORE and COORG, a Gazetteer compiled for the Government of India,
In three volumes, price Rs. 11½.

Vol. I,—Mysore in General: Vol. II,—Mysore by Districts: Vol. III,—Coorg.

LOST—

The right halves of the following Currency Notes :—

No.	Value.	Claimant.
B. 57—13459	Rs. 20.	Krishnappa, Head Gumasta, Chikmagalur.
J. 13—01765	„ 20.	

253

COORG.

NOTIFI-

The 24th

Notice is hereby given for general information that applications having been received for the pur-
at the 2nd Assistant Superintendent's Office, at Mercara, at noon on Thursday 4th November 1880, and

Survey No.	Name of Applicant.	Name of Jungle.	Village, Nad and Taluk.	Area in Acres.	Value of Timber.		
			Mercara Taluk.				
4704	Murugana Nanjappa ...	Dalira paisari	Kandanakolli in Mercara-Halerinad.	1·02	19	0	0
			Yedenalknad Taluk.				
4870	Kuppandra Machaiya ...	Guddekatchada paisari ...	Nangala in Yedenalknad ...	16·55	33	8	0
4879	Palpara Rudraiya ...	Illimuri paisari. ...	Muggula in do ...	12·27	426	0	0
4384	Mukkatti Atchappa and Nellachenda Iyappa	Kuramadu paisari ...	Hoskote in Ammattinad ...	13·21	89	8	0
4385	Mapille K. Mayine ...	Anegodu paisari ...	Nalavatokkalu in do ...	8·57	84	8	0
			Kiggatnad Taluk.				
4501	Chatteyandamada Subbaiya.	Mayakoplu Jungle ...	Settigeri in Tavalageri-Murnad.	2·79	64	8	0
4568	Kalangala Subbaiya ...	Kentarimotte paisari ...	Settigeri in Bettiyatnad ...	5·34	19	0	0
			Nanjarajpatna Taluk.				
4295	Malliyana Mallappa ...	Geniuduve paisari ...	Beligeri in do ...	3·61	14	0	0
4705	Hippli Santaiya. ...	Kallumotte paisari ...	Muvattokallu	8·50	21	0	0
4383	Kottigemane Basappa ...	Menasinakulada Alakumurikadu	Santahalli in Yedavanad ...	4·14	12	0	0
			Telsavirshime Taluk.				
4243	Sivachar Nanjegauda ...	Nanjegauda's hittlu ...	Menasa village in Nidta hobli	0·25	0	0	0

CATION.

July 1880.

chase of the undermentioned lands under the Waste Land Rules, they will be put up to public auction sold to the highest bidders above the upset price.

Upset price.			Boundaries.			
			North.	South.	East.	West.
21	0	0	Murugana Nanjappa's Makiyam báne.	Murugana Nanjapp's Makiyambáne.	Báne attached to Brahman Venkappaiya's Madu báne.	Murugana Nanjappa's Makiyam báne.
66	9	7	Kumbirandra Puvaiya's jammada báne and coffee estate, sanna voni or pook kadanga.	Chandramakkala Kariyappa's Guddekatchada coffee estate, Chamira Nanjappa's coffee estate paisari cattle path, Kumbiranda Puvaiya's Guddekatchada coffee estate.	Aramanedoddakadanga, Government paisari.	Kumbir and a Puvaiya's jammada báne and coffee estate, Chandra makala Kalaiya's coffee estate.
450	8	8	Palpare Rudraiya's sagana báne coffee estate and road.	Katrabetta paisari and Illimuri paisari.	Cheriya or Sannabetta paisari and Illimuri paisari.	Amme kadu paisari and cattle path.
115	14	9	Doddiyanda Kaliyanna's jamma kambarana warga báne.	Cheriya parambu báne attached to the 196¼ bhattis of Narateva warga of Nallachanda Monnaiya.	Doddiyanda Kaliyanna's jamma kambarana warga báne, boundary stones between kaladabaigodu and Hoskote village, Cheriya perambu báne attached to the 196¼ bhattis of Narateva warga of Nallachanda Monnaiya.	Doddiyanda Kaliyanna's jamma kambarana warga báne, Cheriya parambu báne attached to the 196¼ bhattis of Narateva warga of Nallachanda Monnaiya.
101	10	2	Doddamuri báne attached to jamma Chillavanda akateva warga of 160 bhattis belonging to P. Kalaiya: demarcation of boundary between Nalavattokkalu and Hoskote villages.	Road to Virarajendrapet Anegodu paisari, foot-path from Hoskote to Nalavattokkalu.	Demarcation of boundary between Nalavattokkalu and Hoskote villages.	Doddamuri báne attached to jamma Chillavenda Akatevavargada of 160 bhattis belonging to P. Kalaiya, Anegodu paisari foot path from Hoskote to Nalavattokkalu.
70	1	3	Paisari jungle.	Paisari báne.	Paisari jungle and Bagavate Devara kadu.	Paisari báne.
29	10	11	Kentarimotte paisari and Kenderi river.	Kalangala Subbaiya's jammada obbikandi báne attached to his 110 bhattis Kadamundateva warga.	Kalangala Subbaiya's jammada obbikandi báne attached to his 110 bhattis Kadamundateva warga.	Kenteri motte paisari
21	3	6	Kallumotte paisari. ...	Geniuduve bore paisari.	Kallumotte paisari. ...	Mallaiya's Geniuduve paisari coffee estate, Mallajana Mallaiya's jamma biralu mavina marada báne.
38	0	0	Chenevarada Rudraiya's estate, Mukkatira jammada Dodda báne.	Government kallumotte paisari hill demarcation line between Iggodlu and Muvattokallu village.	Mukkatira jammada Doda báne demarcation line between Iggodlu and Muvattokallu village.	Tungapora rock Government kallumotte paisari hill.
20	4	6	Menasinakulada Alakumri kadu and stream.	Old ditch and Alakumri kallumotte.	Stream and Alakumbri kallumotte.	Menasinakulada Alakumrikadu old ditch.
0	8	0	Talkote kereyeri	Doddakerieri.	Doddakeriyeri.	S. Siddegauda's gadde.

H. G. THOMSON,
Superintendent.

Deaths registered in the Town and Cantonment of Bangalore for the Week ending 18*th June* 1880.

Estimated Population. { Males .. 72,236
Females .. 70,277

Total.... 142,513

Diseases.	M.	F.	Total.
Cholera	...	...	...
Small-pox	...	...	...
Fevers	8	6	14
Bowel-complaints ...	1	2	3
Suicide	...	...	...
Wounding	1	...	1
Accident	2	1	3
Snake-bite or killed by wild beasts.	...	...	...
All other causes ...	6	11	17
Total.....	18	20	38
Births during the week ...	26	40	66

Deaths registered in the Town of Mysore for the Week ending 18*th June* 1880.

Estimated Population. { Males .. 29,081
Females .. 28,734

Total.... 57,815

Diseases.	M.	F.	Total.
Cholera	...	...	...
Small-pox	..	..	...
Fevers	3	5	8
Bowel-complaints	4	5	9
Suicide	1	...	1
Wounding	...	...	...
Accident	..	...	...
Snake-bite or killed by wild beasts ..	...	...	...
All other causes	...	...	...
Total.....	8	10	18
Births during the week ...	12	7	19

Deaths registered in the Town and Cantonment of Bangalore for the Week ending 9*th July* 1880.

Estimated Population. { Males .. 72,236
Females .. 70,277

Total.... 142,513

Diseases.	M.	F.	Total.
Cholera	...	...	...
Small-pox	...	...	...
Fevers	6	10	16
Bowel-complaints	2	3	5
Suicide	...	...	...
Wounding	...	..	...
Accident	...	1	1
Snake-bite or killed by wild beasts.	...	...	...
All other causes	12	15	27
Total.....	20	29	49
Births during the week ...	28	29	57

Deaths registered in the Town of Mysore for the Week ending 9*th July* 1880.

Estimated Population. { Males .. 29,081
Females .. 28,734

Total.... 57,815

Diseases.	M.	F.	Total.
Cholera	...	...	...
Small-pox	1	...	1
Fevers	9	5	14
Bowel-complaints	4	3	7
Suicide	...	...	...
Wounding	...	...	...
Accident	...	...	...
Snake-bite or killed by wild beasts.	...	...	...
All other causes	1	2	3
Total.....	15	10	25
Births during the week ...	7	14	21

J. HOUSTON, M. D.,
Surgeon to the Mysore Commn.

26*th July* 1880.

Will be ready by the beginning of May.

Super royal 8*vo.* *Price Rs.* 10.

INDEX to the enactments relating to India. Compiled, under the orders of the Government of India, by Stephen Jacob, B. C. S., to which are prefixed Chronological Tables of the Acts and Regulations of the Indian Legislatures.

Office of Superintendent of Government Printing, 8, Hastings Street, Calcutta.

Mysore Government Press, Bangalore.—1880.

THE

MYSORE GAZETTE.

Published by Authority.

BANGALORE, SATURDAY, AUGUST 7, 1880.

☞ Separate paging is given to this Part in order that it may be filed as a separate compilation.

PART II.

Notifications by the Judicial Commissioner, &c.

JUDICIAL DEPARTMENT.

NOTIFICATIONS.

The 3rd August 1880.

The undermentioned persons have been enrolled as 2nd Grade Pleaders in the Courts of Mysore, under the Rules of 18th February 1879 :—

184. S. Virappa .. Proposing to practise in the Courts of the Nagar Division.
185. H. Bhima Rao Do

The 3rd August 1880.

The undermentioned person has been enrolled as 2nd Grade Pleader in the Courts of Coorg, under the Rules of 23rd December 1879 :—

5. Corvanda Muttanna Nanjappa .. Proposing to practise in the Courts of Coorg.

The 4th August 1880.

The undermentioned gentleman has been enrolled as 1st Grade Pleader in the Courts of Coorg, under the Rules of the 23rd December 1879 :—

Mr. Devaraj Iyer.

J. D. SANDFORD,
Judicial Commissioner.

INAM DEPARTMENT.

NOTIFICATION.

No. 4. *The 28th July* 1880.

Inamdars are hereby informed that 359 *ad-interim* extracts for minor inams situated in the marginally noted taluks were forwarded to the Deputy Commissioners of the Kolar, Mysore and Hassan Districts on the 2nd August 1880, for distribution. They are accordingly to appear to receive the same, on receipt of individual notices from the Amildars of the aforesaid taluks, who are hereby instructed to issue such notices without delay.

Shrinivaspur.	Hassan.
Mulbagal.	Arkalgúd.
Periyapatna.	Belur.
Talkad.	Nagamangala.
Mandya.	

R. A. COLE,
Supt. of Inam Settlements.

FINANCIAL DEPARTMENT.

OPIUM—FINES AND CONFISCATIONS.

Circular No. 1477, *dated* 28*th July* 1880.

The following orders of the Government of India are published for the guidance of District Treasury Officers in Mysore :—

H. HUDSON,
Dy. Acctt. General in Mysore.

Government of India, Department of Finance and Commerce, No. 1446, dated Simla, the 30th June 1880.

Read—

Financial Resolution No. 2139, dated the 11th August 1879, regarding the adjustment of fines and confiscations.

Read also the following extract from letter No. 1197, dated 12th March 1880, to the Accountant General, Bombay :—

In reply to your letter No. 15275, dated the 2nd January 1880, regarding the adjustment of the sale-proceeds of confiscated opium, I am desired to say that the meaning of the Resolution of the 11th August 1879, No. 2139, was that proceeds of fines and confiscations should be credited to *Law and Justice*—

(1) when imposed and realized by judicial officers, and
(2) if there should be such cases, when imposed by revenue and realized by judicial officers;

and to *Excise*—

(1) when imposed and realized by revenue officers;
(2) when imposed by judicial and realized by revenue officers.

ORDERED, that the foregoing extract be communicated to the several Departments of Government of India, the several Local Governments and Administrations, the Comptroller General, the Accountants General, and the Deputy Accountants General in independent charge.

SAVAR AND BARR UNDISBURSED PENSIONS.

From—The Deputy Accountant General of Mysore, To—The Deputy Commissioners, Treasury Department, Circular No. 1478, *dated* 30*th July* 1880.

At the instance of the Military Assistant to the Chief Commissioner, the Deputy Accountant General has the honor to request that sums remaining undisbursed from Transfer Receipts forwarded by the Military Assistant on account of pensions of his department, owing to the pensioner's absence, may be credited to deposits pending payment. If not claimed within six months the sums should be remitted back to the Military Assistant.

H. HUDSON,
Dy. Acctt. General in Mysore.

EDUCATIONAL DEPARTMENT.

The 29*th July* 1880.

U. C. S.—SPECIAL TEST EXAMINATIONS.

Notice is hereby given that the Special Test Examinations will be held in the Central College at Bangalore on the 23rd August and following days. The statement below shews the hour at which each question paper will be given out, and consequently the time when each Candidate for the respective tests should be present. Thus a Candidate for Test IV only need not attend till Tuesday, the 24th, while a Candidate for Test VIII only need not be present till Saturday, the 28th August.

Date.	Hour.	Subject.	Test.	Remarks.
Monday, 23rd August.				
Forenoon ...	10 to 12 ...	Indian Contract Act	I.A.	
		Law relating to See Customs and Conservancy of Ports	V.	
	12 to 1½ ...	Equity	I.A.	
		Limitation Act	I.B.	
	1½ to 2½ ...	.....	.....	Recess.
Afternoon ...	2½ to 5 ...	Mahomedan Law	I.A. I.X	
	2½ to 4½ ...	Sea Customs Manual	V.	
	2½ to 4 ...	Stamp Rules	III.A.	
Tuesday, 24th August.				
Forenoon ...	10 to 11½ ...	Law of Torts	I.A.	
		Stamp Act	I.B.	
	10 to 1 ...	Revenue Law and Regulations ...	III.A. III.B.	
	10 to 12 ...	Salt Law	IV.	
		Civil Account Code	VI.	
	1 to 2 ..	.....	.....	Recess.
Afternoon ...	2 to 4½ ...	Hindu Law	I.A. IX.	
	2 to 4 ...	Book-keeping	VI.	
	2 to 5 ...	Circular Orders of the Board of Revenue. Report of the Madras Salt Commission, and Dr. Ratton's Reports and Handbook of Common Salt	III.A., III.B. I.V.	
Wednesday, 25th Aug.				
Forenoon ...	10 to 1 ...	Code of Civil Procedure	I.A., I.B., I.X.	
	1 to 2 ...	.....	.....	Recess.
Afternoon ...	2 to 5 ...	Indian Evidence Act	I.A., II.A., I.B., II.B., I.X., X.	
Thursday, 26th Aug.				
Forenoon ...	10 to 12½	Translation, Higher Grade. First or more difficult paper, English into Vernacular	VII.A.	
		Penal Code	II.A., II.B., X.	
	12½ to 2 ..	.....	.....	Recess.
Afternoon ...	2 to 4½	Code of Criminal Procedure ...	II.A., II.B., X.	
		Translation, Higher Grade. First or more difficult paper, Vernacular into English	VII.A.	
Friday, 27th August.				
Forenoon ...	10 to 12 ...	Translation, Higher and Lower Grades, English into Vernacular ...	VII.A. and VII.B.	
	12 to 2 ...	.....	.....	Recess.
Afternoon ...	2 to 4 ...	Translation, Higher and Lower Grades, Vernacular into English ...	VII.A., VII.B.	
Saturday, 28th Aug.				
Forenoon ...	10 to 1 ...	Precis-Writing, Higher and Lower Grades	VIII.A., VIII.B.	

RULES FOR CANDIDATES.

(1.)—No Candidate will be allowed to quit the Examination Room on any day until the expiration of half an hour from the time fixed for the commencement of the Examination, and Candidates, arriving after the expiration of that half hour, will not be admitted.

(2.)—No Candidate will be allowed to re-enter the Examination Room during the hour of Examination, after once quitting it, nor to leave the room, without finally giving up his answer papers.

(3.)—Any Candidate detected in speaking to, or in any way communicating with, any other Candidate will be at once removed from the room, and the circumstance reported to the Commissioner.

(4.)—*No Candidate will on any account be allowed to take into the Examination Room books or papers of any kind.* Any one detected with such in his possession, or having recourse to any unfair practices, will be removed from the room, and the occurrence reported to the Commissioner.

(5.) A Candidate having completed his paper will rise from his seat and remain standing until the Superintendent takes his answer papers. Any Candidate wishing to ask any question will pursue the same course, but will on no account leave his place.

(6.)—Any paper sent up without the Candidate's name and number affixed will not be examined.

(7.)—Candidates will not be allowed to take any papers, except their question papers, out of the Examination Room.

(8.)—Candidates are forbidden to tear up papers or to throw papers on the floor. All "spoilt copies, &c.," should be left on the desk where the Candidate has been writing.

L. RICE,
Director of Public Instruction,
Mysore and Coorg.

MEDICAL DEPARTMENT.

No. 522. NOTIFICATION.

The 4th August 1880.

With reference to Notification published at page 318 of *Mysore Gazette* of 12th June 1880, it is hereby notified that the number of appointments to the grade of Medical Pupil to be competed for on the 26th August is reduced to four.

J. HOUSTON, M. D., *Surgeon-Major,*
Surgeon to the Mysore Commission.

ANCHE DEPARTMENT.

NOTIFICATION.

No. 488—324. *The 4th August* 1880.

The following Postal Notice, received from the Offg. Postmaster General of Bombay, is published for general information.

Spare copies of this notice are forwarded to the Anché Mutsaddis for distribution.

B. MURRY GUNGIAH,
Anche Bakshi.

Postal Notice.

Bombay, 29th July 1880.

Under authority from the Director General of Post Offices in India, it is hereby intimated that on and after 1st October next, the limit of money orders drawn on Italy and Denmark will be raised from £ 10 to £ 20.

KADUR DISTRICT.

NOTIFICATION.

The 29th July 1880.

Venkat Vardaiengar, Acting Amildar and 3rd Class Magistrate of the Lakvalli Taluk, is, as laid down in Section 23 (*b*) of the Code of Criminal Procedure, invested with the following powers :—

(1.) Power to hold inquests (Section 135).
(3.) Power to issue order to prevent obstruction, &c., (Section 518).
(4.) Power to issue order prohibiting repetition of nuisance (Section 519).

S. VENKAT VARDAIENGAR,
District Magistrate.

LOST—

The right halves of the following Currency Notes :—

No.	Value.	Claimant.
B. 57—43459	Rs. 20.	Krishnappa, Head Gumasta, Chikmagalur.
J. 13—01765	" 20.	

ORDNANCE DEPOT.

NOTICE.

The 4th August 1880.

Tenders sealed with wax for the supply of baskets, bamboo, brooms, cakes, cow-dung, charcoal, Indian, common, husk, paddy, oil, cocoanut, pots, earthen, and soops, common, to the Ordnance Depôt, Bangalore, for the year 1880—81, will be received by the Deputy Assistant Commissary of Ordnance up to noon on the 25th August 1880.

Lists of stores to be tendered for together with information as to the conditions of supply &c., can be had on application to the Ordnance Depôt on any day, Sundays excepted, between the hours of 8 A. M. and 4 P. M.

Samples of stores to be tendered for can at the same time be seen.

F. CLARK, *Lieut.*,
Dy. Asstt. Commissary of Ordnance.

COMMISSARIAT DEPARTMENT.

NOTICE.

Húnsúr, the 30th July 1880.

The undermentioned elephants, the property of the Madras Government, will be sold by public auction at Mysore on Wednesday the 1st September 1880, for the reasons assigned opposite their respective names :—

1 "Deshkullah"	For being old and out of condition.
1 "Mothi guz"	For being vicious and dangerous to be employed with troops in camp.
1 "Min Bahadúr"	

Terms of Sale.—Cash.

By Order of the Commissary General,

H. R. NANGLE, *Major*,
Exec. Commissariat Officer.

GOVERNMENT CINCHONA FEBRIFUGE.

This preparation is an efficient substitute for Quinine and can be purchased by Government officers, for public and charitable purposes, and by any one taking *twenty pounds* at a time, from the Superintendent, Botanical Garden, Calcutta, *for cash only*, at the following rates:—per four ounce tin *Rs.* 4, *ans.* 8; per eight ounce tin *Rs.* 8, *ans.* 8; per pound tin *Rs.* 16, *ans.* 8. The general public can be supplied by the Superintendent, Botanical Garden, *for cash only*, at the undernoted rates:—per four ounce tin *Rs.* 5, *ans.* 8; per eight ounce tin *Rs.* 10, *ans.* 8; per pound tin *Rs.* 20. This medicine is also sold by the principal European and Native druggists in Calcutta. Postage eight annas per 4 and 8 *oz.* tins and twelve annas per pound tin, in addition to the foregoing rates.

Mysore Government Press, Bangalore.—1880.

THE

MYSORE GAZETTE.

Published by Authority.

BANGALORE, SATURDAY, AUGUST 14, 1880.

☞ Separate paging is given to this Part in order that it may be filed as a separate compilation.

PART II.

Notifications by the Judicial Commissioner, &c.

JUDICIAL DEPARTMENT.

IN THE COURT OF THE JUDICIAL COMMISSIONER OF MYSORE.

Criminal Side.

Rule of Practice No. 22, *dated* 3*rd August* 1880.

Under Section 292 of the Code of Criminal Procedure, and with the concurrence of the Chief Commissioner, the Judicial Commissioner directs that the following words "and the petition of appeal" be added after the word "Order" in Rule 2 of Rule of Practice No. 3, dated 28th May 1878.

J. D. SANDFORD,
Judicial Commissioner.

INAM DEPARTMENT.

NOTIFICATIONS.

No. 4. *The* 28*th July* 1880.

Inamdars are hereby informed that 359 *ad-interim* extracts for minor inams situated in the marginally noted taluks were forwarded to the Deputy Commissioners of the Kolar, Mysore and Hassan Districts on the 2nd August 1880, for distribution. They are accordingly to appear to receive the same, on receipt of individual notices from the Amildars of the aforesaid taluks, who are hereby instructed to issue such notices without delay.

Shrinivaspur.	Hassan.
Mulbagal.	Arkalgúd.
Periyapatna.	Belur.
Talkad.	Nagamangala.
Mandya.	

No. 5. *The* 6*th August* 1880.

Whereas the original title-deeds, numbers noted in the annexed schedule, are reported to have been lost, it is hereby notified for public information that the same are declared to be cancelled and duplicates of the same numbers and dates have this day been issued.

Serial Number.	Taluk.	Village.	Name of the Inamdar.	Description of Inam.	Number of Title-Deeds.	Particulars. Description of Land.	Extent.	Assessment.	Jodi.	Combined Quit-Rent.	Date of issue of Title-Deeds.
							K. C. P.	R. A. P.			
1	Koratagere ...	Kerekallahalli jodi.	Lakkur, Malur Taluk, Ramachar.	Personal.	1047	Dry Perambo-ek.	6 7 14 2 16 13 9 4 11	64 0 0	9 0 4	16 0 0	6th August 1880.
							A. C.				
2	Channagiri ...	Donihalli ..	The Managers for the time being of the Pagoda of Basavanna Devar at Donihalli.	Deradaya	196	Dry No. 88.	0 59	1 11 3	0 13 7	1 0 0	
3	Do ..	Do ...	Do of Ranganatha Devar at Donihalli.	Do ...	197	Do 129...	1·07	3 0 9	1 5 2	1 8 0	
							K. C. P.				
4	Goribidnur ...	Upparhalli ...	Shamapura Anantachar ...	Personal.	38685	Do 49...	0 0 3	0 1 9	...	0 2 0	
					409						

R. A. COLE,
Supt. of Inam Settlements.

REGISTRATION DEPARTMENT.

To—The Registering Officers in Mysore and Coorg, Circular Memorandum No. 7 *of* 1880—81, *dated* 11*th August* 1880.

With reference to the last Clause of Section 35* of the Indian Registration Act III of 1877 as amended by Section 104 of Act XII of 1879, (published in the *Mysore Gazette*, dated 13th December 1879), the Inspector General of Registration has the honor to point out to the Registering Officers in Mysore and Coorg, that if any of the executants of a document purporting to have been executed by two or more persons denies execution, or appears to the Registering Officer to be a minor, an idiot, or a lunatic, he should not refuse registration of the document altogether, but only as regards the person, so denying or appearing disqualified. The refusal should be recorded in an endorsement immediately after the endorsement of admission of execution by the other executants as follows:—

"Registration is refused so far as this document concerns (name in full) who denies execution (or) "appears to the undersigned to be a (minor, idiot, or lunatic as the case may be)."

These instructions should be noted against Registration Rules 33 and 51 and Section 35 of the Act.

H. HUDSON,
Inspector General of Registration,
Mysore & Coorg.

* Section 35, (as amended), if any of the persons by whom the document purports to be executed deny its execution,
or if any such person appears *to the Registering Officers* to be a minor, an idiot, or a lunatic,
or if any person by whom the document purports to be executed, is dead and his representative or assign denies its execution,
the Registering Officer shall refuse to register the document *as to the person so denying appearing or dead.*
* * * *

EDUCATIONAL DEPARTMENT.

The 29*th July* 1880.

U. C. S.—SPECIAL TEST EXAMINATIONS.

Notice is hereby given that the Special Test Examinations will be held in the Central College at Bangalore on the 23rd August and following days. The statement below shews the hour at which each question paper will be given out, and consequently the time when each Candidate for the respective tests should be present. Thus a Candidate for Test IV only need not attend till Tuesday, the 24th, while a Candidate for Test VIII only need not be present till Saturday, the 28th August.

261

Date.	Hour.	Subject.	Test.	Remarks.
Monday, 23rd August.				
Forenoon ...	10 to 12 ...	Indian Contract Act	I.A.	
		Law relating to See Customs and Conservancy of Ports	V.	
	12 to 1½ ...	Equity	I.A.	
		Limitation Act	I.B.	
	1½ to 2½ ...	.....	.....	Recess.
Afternoon ...	2½ to 5 ...	Mahomedan Law	I.A. I.X	
	2½ to 4½ ...	Sea Customs Manual	V.	
	2½ to 4 ...	Stamp Rules...	III.A.	
Tuesday, 24th August.				
Forenoon ...	10 to 11½ ...	Law of Torts	I.A.	
		Stamp Act	I.B.	
	10 to 1 ...	Revenue Law and Regulations ...	III.A. III.B.	
	10 to 12 ...	Salt Law	IV.	
		Civil Account Code ...	VI.	
	1 to 2 ..	.....	.....	Recess.
Afternoon	2 to 4½ ...	Hindu Law	I.A. IX.	
	2 to 4 ...	Book-keeping	VI.	
	2 to 5 ...	Circular Orders of the Board of Revenue. Report of the Madras Salt Commission, and Dr. Ratton's Reports and Handbook of Common Salt	III.A., III.B. I.V.	
Wednesday, 25th Aug.				
Forenoon ...	10 to 1 ...	Code of Civil Procedure	I.A., I.B., I.X.	
	1 to 2 ...	.....	.....	Recess.
Afternoon ...	2 to 5 ...	Indian Evidence Act	I.A., II.A., I.B., II.B., I.X., X.	
Thursday, 26th Aug.				
Forenoon ...	10 to 12½	Translation, Higher Grade. First or more difficult paper, English into Vernacular	VII.A.	
		Penal Code	II.A., II.B., X.	
	12½ to 2 ..	.....	.....	Recess.
Afternoon ...	2 to 4½	Code of Criminal Procedure ...	II.A., II.B., X.	
		Translation, Higher Grade. First or more difficult paper, Vernacular into English	VII.A.	
Friday, 27th August.				
Forenoon ...	10 to 12 ...	Translation, Higher and Lower Grades, English into Vernacular ...	VII.A. and VII.B.	
	12 to 2 ...	.....	.....	Recess.
Afternoon ...	2 to 4 ...	Translation, Higher and Lower Grades, Vernacular into English ...	VII.A., VII.B.	
Saturday, 28th Aug.				
Forenoon ...	10 to 1 ...	Precis-Writing, Higher and Lower Grades	VIII.A., VIII.B.	

265

RULES FOR CANDIDATES.

(1.)—No Candidate will be allowed to quit the Examination Room on any day until the expiration of half an hour from the time fixed for the commencement of the Examination, and Candidates arriving after the expiration of that half hour will not be admitted.

(2.)—No Candidate will be allowed to re-enter the Examination Room during the hour of Examination after once quitting it, nor to leave the room without finally giving up his answer papers.

(3.)—Any Candidate detected in speaking to, or in any way communicating with, any other Candidate will be at once removed from the room, and the circumstance reported to the Commissioner.

(4.)—*No Candidate will on any account be allowed to take into the Examination Room books or papers of any kind.* Any one detected with such in his possession, or having recourse to any unfair practices, will be removed from the room, and the occurrence reported to the Commissioner.

(5.) A Candidate having completed his paper will rise from his seat and remain standing until the Superintendent takes his answer papers. Any Candidate wishing to ask any question will pursue the same course, but will on no account leave his place.

(6.)—Any paper sent up without the Candidate's name and number affixed will not be examined.

(7.)—Candidates will not be allowed to take any papers, except their question papers, out of the Examination Room.

(8.)—Candidates are forbidden to tear up papers or to throw papers on the floor. All "spoilt copies, &c.," should be left on the desk where the Candidate has been writing.

The 13th August 1880.

The following notice is published for the information of those concerned, by request of the Commissioner for U. C. S. Examinations, Madras.

L. RICE,
Director of Public Instruction,
Mysore and Coorg.

CIVIL MEDICAL PUPILS AND CIVIL HOSPITAL APPRENTICES.

Candidates in the Mofussil, who have applied to be examined for the Grade of Civil Medical Pupil, are informed that the examination will be held on Thursday and Friday, the 2nd and 3rd proximo, under the superintendence of the Surgeons of the Districts.

Those who have applied for admission into the Grade of "Civil Hospital Apprentice" will be examined on the 2nd idem in the *English language* only, agreeably to para 3 of the Notification of the 3rd June last.

The following table shews the arrangements of the examination :—

Day and Hour of Examination.	Subject.	REMARKS.
THURSDAY, 2ND SEPTEMBER.		
10 to 10½ A. M.	Dictation.	
11 A. M. to 1. P. M.	Arithmetic.	
1 to 2 P. M.	.....	Recess.
2 to 4½ P. M.	English Grammar and Composition.	
FRIDAY, 3RD SEPTEMBER.		
10½ A. M. to 12	Indian History.	
12 to 1 P. M.	Translation, English into Vernacular.	
1 to 2 P. M.	.....	Recess.
2 to 3½ P. M.	Geography.	
3½ to 4½ P. M.	Translation, Vernacular into English.	

ANCHE DEPARTMENT.

NOTIFICATION.

No. 523—343. *The* 13*th August* 1880.

The following Postal Notice issued by the Director General of the Post Office of India is published for general information.

B. MURRY GUNGIAH,
Anche Bakshi.

Postal Notice.

THE remitter of an inland money order may attach to the form of application a postcard which will be delivered to the payee with the money order. The remitter should write on the appropriate side of the postcard the name and address of the payee, and on the reverse he may write any instructions or communication he desires to be conveyed to the payee.

BANGALORE MUNICIPALITY.

No. 1801. *The* 9*th August* 1880.

Memo of propositions to be laid before the Ordinary Meeting of the Cantonment Municipal Commission, to be held at their Office Premises, No. 12, Residency Road, on Tuesday the 24th August 1880, at 7½ A. M.

1. The usual monthly accounts for the month of July 1880.

2. Remission and exemption of house-tax.

3. List of agreements entered into by the President during the month of July 1880.

4. List of estimates sanctioned by the President during the month of July 1880.

5. Deferred Proceedings relating to the storage of kerosine oil.

6. Letter No. 2094, dated 30th July 1880, from the Deputy Accountant General of Mysore, relating to the grant of a gratuity to late Overseer Mahomed Husen.

7. Letter No. 3164—Gl. 825, dated 30th July 1880, from the Secretary to the Chief Commissioner of Mysore, General Department, relating to the Mayo Memorial Hall.

8. Letter, dated 6th August 1880, from S. Lee, Esq., relating to the purchase of 2 plots of ground at Yellegaudanpalyam.

9. Proposed arrangements for taking the next Census in 1880—81.

10. Standish Lee, Esq., Municipal Commissioner, No. II Division, states that he will move for a Committee to enquire into the working of lighting contract, &c.

The 12*th August* 1880.

Memo of propositions to be laid before the next meeting of the Town Municipal Commission, to be held at their Office Premises, Bangalore Taluk Cutcherry, on Saturday the 28th August 1880 at 7½ A. M.

1. The usual monthly accounts and mortuary return for the month of July 1880.

2. Proceedings of the Chief Commissioner of Mysore, No. 2164—Ml. 92, dated 13th July 1880, regarding the collection of loom-tax.

Deferred Proposition.

3. Proposed arrangements by the President for taking the Census of the Town, as per Chief Commissioner's Proceedings No. 1376—Ml. 228, dated 11th June 1880.

The 7th August 1880.

Copy of Proceedings of the Town Municipal Commission at a meeting held on Saturday the 24th July 1880, at 7½ A. M.

President.

Dr. J. H. Orr, C. B., *Present.*

Ex-Officio Members.

Absent.—The Deputy Commissioner, Bangalore Dist.
The Executive Engineer, Nundydroog Divn.
The Commissary of Ordnance.
The Surgeon to the Mysore Commission.
The Amildar of Bangalore.

Municipal Commissioners.

1st Division, Balé Pettah.

Present.—Mr. A. S. Raghavachar.
Absent.— Mr. B. Murry Gungiah.

2nd Division, Manavarte Pettah.

Present.—Mr. A. Srinivasachar.
Mr. Khazi Abed Jaffar Shaib.

3rd Division, Alsur Pettah.

Present.—Mr. P. Changalraya Modaliar.
Mr. S. V. Annaiyappa Chetti.

4th Division, Nagarta Pettah.

Present.—Mr. C. Doddi Venkatramana Chetti.
Mr. B. Narayan Chetti.

5th Division, Kalasi Palyam.

Present.—Mr. C. Muttusami Naidu.
Mr. M. Ramasami Chetti.

I. The usual monthly accounts for June 1880 are laid before the Board, read and duly passed.

Ordered.—That the following cash account be submitted to the Deputy Accountant General in Mysore.

Cash Account Current of the Municipal Commission for the Town of Bangalore for the month of June 1880.

Receipts.	Amount.			Expenditure.	Amount.		
Cash Balance brought forward from last month's account	2,747	10	0	I. Collection. 1. For octroi tax ...	216	0	7
I. Octroi. 2. Animals for slaughter ..	10	8	0	I. Collection. 2. Mohatarfa tax on houses, buildings and lands, and for tax on professions and trades	158	7	6
I. Octroi. 4. Building materials ...	16	13	8	I. Collection. 7. Rents assigned to Municipality ...	20	7	6
I. Octroi. 6. Tobacco, betel-leaf and betel-nuts ...	1,656	11	5	II. Head Office charges ...	416	9	11
I. Octroi. 7. Tax on dry and green cocoanuts ...	268	9	7	III. Public Works. 1. Supervision ...	154	1	6
II. Mohatarfa tax on houses, buildings and lands	470	6	4	III. Public Works. 2. *a.* Original works ...	917	8	6
				III. Public Works. *c.* Compensation of houses..	10	0	0
				III. Public Works. 3. Repairs ...	685	11	10
III. Mohatarfa tax on professions and trades	316	3	4	IV. Police	1,410	12	5
				VI. Charitable grants—2. Vaccination ...	20	4	4
				VII. Conservancy	794	6	6
VII. Rents.—2. Nazul Shops ...	218	14	0	IX. Lighting	182	12	6
6. Moiety of Land Revenue ..	3,181	11	6	X. Gardens	13	12	5
IX. Extraordinary.— 5. Other Items ..	28	8	0	XII. Miscellaneous 3. Cattle Pound charges	16	3	6
X. Fines	5	13	5	XII. Miscellaneous 4. Statistics and mortuary registration ...	32	5	0
XI Pounds	16	10	0				
XII. Miscellaneous	213	13	7	XII. Miscellaneous 5. Other miscellaneous items ...	153	7	8
XIII. Fees from liquor licenses ...	270	9	4	Total Rupees.....	5,202	15	8
				To Cash Balance carried to next month's accounts.....	4,219	15	4
Grand Total Rs.....	9,422	15	0	Grand Total Rs.....	9,422	15	0

Mortuary Register, Bangalore.

Statement of Births and Deaths within the Town Municipal limits during the month of June 1880.

Causes of Death.	Europeans.		East Indians.		Musalmáns.		Hindus.		Native Christians.		Buddhists.		Other Classes.		Total.		Total in—		Difference.	
	M.	F.	M.	F.	M.	F.	M.	F.	M.	F.	M.	F.	M.	F.	M.	F.	June 1880.	May 1880.	Increase.	Decrease.
Cholera ...	...	...	...	...	...	...	...	...	...	...	...	...	...	...	...	...	...	...	...	...
Small-pox ...	...	...	...	...	...	...	...	...	...	...	...	...	...	...	...	...	...	...	...	...
Fevers ...	...	...	...	...	10	6	17	18	1	...	...	...	...	...	28	24	52	47	5	...
Bowel-complaints ...	...	...	...	...	2	...	...	3	...	...	...	...	...	...	2	3	5	4	1	...
Injuries. Suicide ...	...	...	...	...	1	...	...	...	...	...	...	...	...	...	1	...	1	...	1	...
Injuries. Wounding ...	...	...	...	...	...	1	...	...	...	...	...	...	...	...	...	1	1	...	1	...
Injuries. Accident ...	...	...	...	...	...	...	1	1	...	...	...	...	...	...	1	1	2	3	...	1
Injuries. Snake-bite or killed by wild beasts. ...	...	...	...	...	...	...	...	...	...	...	...	...	...	...	...	...	...	1	...	1
Other Causes—																				
Consumption ...	...	...	...	...	1	...	5	4	...	...	...	...	...	...	6	4	10	7	3	...
Convulsion ...	...	...	...	...	1	...	4	1	1	...	...	...	...	...	6	1	7	2	5	...
Dropsy ...	...	...	...	...	...	1	...	...	...	...	...	...	...	...	...	1	1	1	...	...
Lock-jaw ...	...	...	...	...	...	...	...	3	...	...	...	...	...	...	...	3	3	6	...	3
Asthma ...	...	...	...	...	...	...	1	1	...	...	...	...	...	...	1	1	2	...	2	...
Rheumatism ...	...	...	...	...	...	...	...	...	...	...	...	...	...	...	...	...	...	1	...	1
Old-age ...	...	...	...	...	...	...	2	...	...	...	...	...	...	...	2	...	2	6	...	4
Croup ...	...	...	...	...	...	...	5	2	...	...	...	...	...	...	5	2	7	2	5	...
Ulcer ...	...	...	...	...	...	...	...	...	...	...	...	...	...	...	...	...	...	1	...	1
Total Other Causes.....	...	...	...	...	2	1	17	11	1	...	...	...	...	...	20	12	32	26	15	9
Total Deaths.....	...	...	...	...	15	8	35	33	2	...	...	...	...	...	52	41	93	81	23	11
Number of Births during the month.	...	...	...	...	8	12	51	36	...	...	...	...	...	...	59	48	107	90	17	...

Abstract of Mortuary Report and Percentage of Births and Deaths on the estimated Population, 58,573.

Classes.	Births.		Difference.		Percentage of Births.		Deaths.		Difference.		Percentage of Deaths.	
	May 1880.	June 1880.	Increase.	Decrease.	May 1880.	June 1880.	May 1880.	June 1880.	Increase.	Decrease.	May 1880.	June 1880.
Europeans ...	...	...	...	...	...	...	...	...	...	..	...	...
East Indians ...	...	...	...	...	...	...	...	...	...	...	...	...
Musalmáns ...	16	20	4	...	·24	·308	22	22	...	...	·33	·33
Hindus ...	74	87	13	...	·14	·16	59	69	10	...	·11	·13
Native Christians	...	...	...	..	...	...	...	2	2	...	...	·307
Buddhists ..	...	...	...	...	...	...	...	...	...	...	...	...
Other Classes ...	...	...	...	...	...	...	...	...	...	...	...	...
Total.....	90	107	17	...	·15	·18	81	93	12	...	·14	·15

REMARKS.

There were 93 deaths during the month; 52 from fever, 5 from bowel-complaints, 4 from injuries and 32 from other causes as detailed in the previous page.

The number of deaths in June 1880, as compared with those of May 1880, are as follows:—

Of Musalmáns 22 against 22, Hindus 69 against 59, Native Christians 2 against none, being 12 more than the previous month and 18 below the total number of deaths registered during the corresponding month of last year.

Age.

Classes.	Number died during the month.	Born dead.	Under 1 year.	2 to 5 years.	6 to 12 do	12 to 20 inclusive.	21 to 30 do	31 to 40 do	41 to 50 do	51 to 60 do	Above 60.	Total.
Europeans ...	...	...	...	...	...	...	...	...	...	...	...	...
East Indians ...	...	...	...	...	...	...	...	...	...	...	...	...
Musalmáns ...	22	...	4	2	1	1	4	3	3	3	1	22
Hindus ...	69	1	13	4	9	5	9	14	5	2	7	69
Native Christians ...	2	...	1	...	...	...	...	...	...	...	1	...
Buddhists ...	...	...	...	...	...	...	...	...	...	...	...	...
Other Classes ...	...	...	...	...	...	...	...	...	...	...	...	...
Total.....	93	1	18	6	10	6	13	17	8	5	9	93

Resolution.—Approved.

II. Proceedings of the Chief Commissioner of Mysore, No. 1376-Mis. 228, dated 11th June 1880, issuing instructions as to the method and preparatory measures necessary for taking a General Census of the Province in February 1881, and order thereon.

Resolved.—That the matter be deferred till some day in August next in view to have before the meeting all the papers connected with the last Census.

III. Proceedings of the Chief Commissioner of Mysore, No. 1634-5—Ml. 74, dated 22nd June 1880, reviewing the revised Budget of the Cantonment Municipality for the year 1880—81.

Resolution.—In dircting these Proceedings to be recorded, the Commissioners would at the same time wish to express their unanimous opinion that the services of a detective Overseer are most necessary and they would recommend therefore that the present official should be retained; his salary however to be reduced as they understand was proposed by the Commissioners for the Cantonment.

IV. Re-consideration of the Resolution passed at an ordinary meeting of the Town Municipal Commission held on the 21st July 1877, regarding the existing Bye-laws.

Resolved.—That in supersession of the above resolution a sub-committee consisting of the following Commissioners be appointed in view to carry into effect the object of revising the existing Code of Bye-laws.

Mr. A. S. Raghavachar.
„ A. Srinivasachar.
„ P. S. Chengalraya Modaliar.
Mr. Doddi Venkatramana Chetti.
„ C. Muttusami Naidu.

J. H. ORR,
President, Town & Cantt. Ml. Commns.

NUNDYDROOG DIVISION.

NOTIFICATION.

The 7th August 1880.

Sessions for the Bangalore District will be held at Bangalore on Monday the 16th day of August 1880, and following days.

The case mentioned below is posted for trial :—

Magisterial No.	Sessions No.	Name of Prisoner.	Name of the Committing Magistrate.	Sections charged under—	Date of Committal.
37 of 1880.	27	Gavi	Mr. N. Krishna Rao, 1st Class Magistrate.	317, I. P. C	28th July 1880.

The Magistrate above named is hereby directed to cause all parties connected with the above noted case to be in attendance at Bangalore before the Sessions Court on Monday the 16th day of August 1880.

All cases committed prior to that date will be taken up for trial in addition to the above.

T. R. A. THUMBOO CHETTY,
Sessions Judge.

TUMKUR DISTRICT.

The 6th August 1880.

NOTICE UNDER SECTION 354 OF THE CODE OF CIVIL PROCEDURE.

It is hereby declared that the undermentioned persons are insolvents and as such entitled to the benefit of the provisions of Chapter XX of the Code of Civil Procedure, and it is ordered that the said insolvents be and are hereby discharged from custody and from all liability to be arrested or imprisoned in respect of any of the debts mentioned in the schedule filed with the records of the cases concerned.

1. Shamaiengar, Revenue Gumasta, Koratagere Taluk.. An insolvent in Case No. 3 of 1880.
2. Devangada Hanumantaiya .. .. An insolvent in Case No. 4 of 1880.

E. CHITAMBRAM IYER,
Subordinate Judge.

HASSAN DISTRICT.

NOTIFICATION.

The 6th August 1880.

Syed Amir Hasan, Acting Amildar and 3rd Class Magistrate of the Narsipur Taluk, is hereby invested with the following powers under Section 23 (*b*) of the Code of Criminal Procedure, (Act X of 1872):—

1. Power to entertain complaints of offences in cases in which he has jurisdiction to try or to commit for trial (Section 141).
2. Power to hold inquests (Section 135).
3. Power to issue order to prevent obstruction, &c., (Section 518).

W. HILL,
District Magistrate.

271

Season Report of the Shimoga District for the month of July 1880.

Rain-fall.—The rain-fall in the several taluks of the District during the month was as follows :—

	Inches.	Cents.		I.	C.
Shimoga	5	84	Sorab	15	76¾
Channagiri	4	37	Ságar	20	76
Honnali	3	77½	Nagar	78	48
Shikarpur	6	84	Kavaledurga ..	40	15

The average readings of the thermometer at Shimoga were 75·64 at 9-30 A. M. and 77·74 at 3-30 P. M.

Lands.—Lands assessed at Rs. 2,121—6—0 were taken up for cultivation against lands assessed at Rs. 940—6—0 given up.

Health.—Indifferent.

Cattle.—Suffer from murrain and mouth and foot disease.

Prices.—Easy.

V. N. NARSIMMAIENGAR,
Dy. Commissioner.

Visitors to the Mysore Government Museum, Bangalore, during the month of July 1880, *were* 28,054 *in number, averaging, exclusive of Sundays,* 1,039 *daily.*

Signatures made in—							Total of Signatures.		Unable to sign but tally kept.	Total of Visitors.	Unable to sign No. of—		Total of Visitors.
English.													
Europeans.	Natives.	Tamil.	Telugu.	Kanarese.	Hindustani.	Mahratta.	Males.	Females.			Men and Boys.	Women and Girls.	
305	560	481	177	1,300	215	95	2,972	161	24,921	28,054	12,870	12,051	28,054

J. HOUSTON, M. D.,
Supt., Mysore Govt. Museum.

Abstract of Meteorological Reports received from Head-Quarters of Districts in the Province of Mysore, from 16*th to* 31*st July* 1880.

District.	Thermometer. Averages for the haf month. 9-30 A. M. Dry bulb.	Wet bulb.	Difference.	3-30 P. M. Dry bulb.	Wet bulb.	Difference.	Thermometer. Maximum.	Minimum.	Rain. Inches.	Cents.	Wind.
Kolar	75	...	...	77	...	...	78	69	2	9	S. W.
Túmkúr ...	74	63	11	85	74	11	87	60	1	47	S. W.
Mysore*... ...	...	...	..	...	...	...	...	...	...	...	...
Hassan	64	35	29	69	39	30	75	61	1	45	W. S. W.
Shimoga ...	76	...	...	71	...	...	...	...	2	16	S. W.
Kadur ...	71	66	...	70	65	...	75	59	1	14	S. W.
Chitaldroog ...	73	...	...	75	...	...	...	...	1	13	W. S. W.

*Information not received.

Deaths registered in the Town and Cantonment of Bangalore for the Week ending 16th July 1880.

Estimated Population. { Males .. 72,236
Females .. 70,277

Total .. 142,513

Diseases.	M.	F.	Total.
Cholera	...	...	...
Small-pox	...	...	...
Fevers	9	5	14
Bowel-complaints ...	3	1	4
Suicide	...	...	...
Wounding	...	...	...
Accident	...	...	...
Snake-bite or killed by wild beasts.	...	...	...
All other causes ...	10	6	16
Total.....	22	12	34
Births during the week ...	36	26	62

Deaths registered in the Town of Mysore for the Week ending 16th July 1880.

Estimated Population. { Males .. 29,081
Females .. 28,734

Total .. 57,815

Diseases.	M.	F.	Total.
Cholera	...	...	...
Small-pox	..	..	...
Fevers	7	6	13
Bowel-complaints	2	4	6
Suicide	—	...	...
Wounding	...	...	...
Accident	..	...	...
Snake-bite or killed by wild beasts ...	...	...	...
All other causes	...	...	...
Total.....	9	10	19
Births during the week ...	7	7	14

Deaths registered in the Town and Cantonment of Bangalore for the Week ending 23rd July 1880.

Estimated Population. { Males .. 72,236
Females .. 70,277

Total .. 142,513

Diseases.	M.	F.	Total.
Cholera	...	...	...
Small-pox	...	...	...
Fevers	10	6	16
Bowel-complaints	4	6	10
Suicide	...	...	...
Wounding	...	..	...
Accident	...	...	...
Snake-bite or killed by wild beasts.	...	...	...
All other causes	21	4	25
Total.....	35	16	51
Births during the week ...	36	29	65

Deaths registered in the Town of Mysore for the Week ending 23rd July 1880.

Estimated Population. { Males .. 29,081
Females .. 28,734

Total .. 57,815

Diseases.	M.	F.	Total.
Cholera	...	...	...
Small-pox	1	...	1
Fevers	6	9	15
Bowel-complaints	2	4	6
Suicide	...	...	...
Wounding	...	...	...
Accident	...	...	...
Snake-bite or killed by wild beasts.	...	...	...
All other causes	...	...	...
Total.....	9	13	22
Births during the week ...	8	10	18

9th August 1880.

J. HOUSTON, M. D.,
Surgeon to the Mysore Commn.

POSTAL NOTICE.

It is hereby notified that the designation "Inspector of Post Offices" has been changed to "Superintendent of Post Offices."

J. HONNER,
Supt., Post Offices, Bangalore Divn.

LOST—

The right halves of the following Currency Notes :—

No.	Value.	Claimant.
B. 57—43459 ..	Rs. 20. ..	Krishnappa, Head Gumasta, Chikmagalur.
J. 13—01765 ..	,, 20. ..	

ORDNANCE DEPOT.

NOTICE.

The 4th August 1880.

Tenders sealed with wax for the supply of baskets, bamboo, brooms, cakes, cow-dung, charcoal, Indian, common, husk, paddy, oil, cocoanut, pots, earthen, and soops, common, to the Ordnance Depôt, Bangalore, for the year 1880—81, will be received by the Deputy Assistant Commissary of Ordnance up to noon on the 25th August 1880.

Lists of stores to be tendered for together with information as to the conditions of supply, &c., can be had on application to the Ordnance Depôt on any day, Sundays excepted, between the hours of 8 A. M. and 4 P. M.

Samples of stores to be tendered for can at the same time be seen.

F. CLARK, *Lieut.*,
Dy. Asstt. Commissary of Ordnance.

COMMISSARIAT DEPARTMENT.

NOTICE.

Húnsúr, the 30th July 1880.

The undermentioned elephants, the property of the Madras Government, will be sold by public auction at Mysore on Wednesday the 1st September 1880, for the reasons assigned opposite their respective names :—

1 "Deshkullah" ..	For being old and out of condition.
1 "Mothi guz" ..	For being vicious and dangerous to be employed with troops in camp.
1 "Min Bahadúr" ..	

By Order of the Commissary General,

Terms of Sale.—Cash.

H. R. NANGLE, *Major*,
Exec. Commissariat Officer.

GOVERNMENT CINCHONA FEBRIFUGE.

This preparation is an efficient substitute for Quinine and can be purchased by Government officers, for public and charitable purposes, and by any one taking *twenty pounds* at a time, from the Superintendent, Botanical Garden, Calcutta, *for cash only*, at the following rates:—per four ounce tin *Rs.* 4, *ans.* 8 ; per eight ounce tin *Rs.* 8, *ans.* 8 ; per pound tin *Rs.* 16, *ans.* 8. The general public can be supplied by the Superintendent, Botanical Garden, *for cash only*, at the undernoted rates:—per four ounce tin *Rs.* 5, *ans.* 8; per eight ounce tin *Rs.* 10, *ans.* 8 ; per pound tin *Rs.* 20. This medicine is also sold by the principal European and Native druggists in Calcutta. Postage eight annas per 4 and 8 *oz.* tins and twelve annas per pound tin, in addition to the foregoing rates.

THE

MYSORE GAZETTE.

Published by Authority.

BANGALORE, SATURDAY, AUGUST 21, 1880.

☞ Separate paging is given to this Part in order that it may be filed as a separate compilation.

PART II.

Notifications by the Judicial Commissioner, &c.

JUDICIAL DEPARTMENT.

NOTIFICATION.

The 17th August 1880.

The undermentioned person has been enrolled as a 2nd Grade Pleader in the Courts of Mysore, under the Rules of 18th February 1879 :—

186. Chitaldroog Narasingappa .. Proposing to practise in the Courts of the Nagar Division.

J. D. SANDFORD,
Judicial Commissioner.

INAM DEPARTMENT.

NOTIFICATIONS.

No. 4. *The 28th July* 1880.

Inamdars are hereby informed that 359 *ad-interim* extracts for minor inams situated in the marginally noted taluks were forwarded to the Deputy Commissioners of the Kolar, Mysore and Hassan Districts on the 2nd August 1880, for distribution. They are accordingly to appear to receive the same, on receipt of individual notices from the Amildars of the aforesaid taluks, who are hereby instructed to issue such notices without delay.

Shrinivaspur.	Hassan.
Mulbagal.	Arkalgúd.
Periyapatna.	Belur.
Talkad.	Nagamangala.
Mandya.	

No. 5. *The 6th August* 1880.

Whereas the original title-deeds, numbers noted in the annexed schedule, are reported to have been lost, it is hereby notified for public information that the same are declared to be cancelled and duplicates of the same numbers and dates have this day been issued.

Serial Number.	Taluk.	Village.	Name of the Inamdar.	Description of Inam.	Number of Title-Deeds.	Particulars. Description of Land.	Extent.	Assessment.	Jodi.	Combined Quit-Rent.	Date of issue of Title-Deeds.
							K. C. P.	R. A. P.			
1	Koratagere ...	Kerekallahalli jodi.	Lakkur, Malur Taluk, Ramachar.	Personal.	1047	Dry Perambo-ke.	6 7 14 2 16 13 9 4 11	64 0 0	9 0 4	16 0 0	6th August 1880.
							A. C.				
2	Channagiri ...	Donihalli ...	The Managers for the time being of the Pagoda of Basavanna Devar at Donihalli.	Devadaya	196	Dry No. 88.	0 59	1 11 3	0 13 7	1 0 0	
3	Do ...	Do ...	Do of Ranganatha Devar at Donihalli.	Do ...	197	Do 129...	1·07	3 0 9	1 5 2	1 8 0	
							K. C. P.				
4	Goribidnur ...	Upparhalli ...	Shamapura Anantachar ...	Personal.	38685	Do 49...	0 0 3	0 1 9	...	0 2 0	
					409						

R. A. COLE,
Supt. of Inam Settlements.

BANGALORE DISTRICT.

NOTIFICATION.

The 13th August 1880.

Budan Sheriff, Acting Amildar and 3rd Class Magistrate, Devanhalli Taluk, is invested with the additional powers referred to in Clause (*b*) of Section 23 of the Code of Criminal Procedure :—

(1.) Power to hold inquests, (Section 135).

(2.) Power to entertain complaints of offences in cases in which he has jurisdiction to try, (Section 141).

(3.) Power to issue order to prevent obstruction, &c., (Section 518).

L. RICKETTS,
District Magistrate.

KOLAR DISTRICT.

NOTIFICATION.

The 10th August 1880.

C. Krishna Rao, Amildar and 3rd Class Magistrate of the Chikballapur Taluk, is, as laid down in Section 23 (*b*) of the Code of Criminal Procedure, invested with the following powers :—

(3.) Power to issue order to prevent obstruction, &c., (Section 518).

(4.) Power to issue order prohibiting repetition of nuisance, (Section 519).

B. KRISHNAIENGAR,
District Magistrate.

TUMKUR DISTRICT.

The 6th August 1880.

NOTICE UNDER SECTION 354 OF THE CODE OF CIVIL PROCEDURE.

It is hereby declared that the undermentioned persons are insolvents and as such entitled to the benefit of the provisions of Chapter XX of the Code of Civil Procedure, and it is ordered that the said insolvents be and are hereby discharged from custody and from all liability to be arrested or imprisoned in respect of any of the debts mentioned in the schedule filed with the records of the cases concerned :—

1. Shamaiengar, Revenue Gumasta, Koratagere Taluk.. An insolvent in Case No. 3 of 1880.
2. Devangada Hanumantaiya .. .. An insolvent in Case No. 4 of 1880.

E. CHITAMBRAM IYER,
Subordinate Judge.

MYSORE DISTRICT.

NOTIFICATION.

The 13th August 1880.

Found straying in Nanjangúd Taluk, a bay Australian gelding, black points, height 16—1—0, brand $\frac{S}{2}$ on near shoulder, a mark of old sore back. Can be had on proof of ownership before the 31st August 1880, on payment of all charges. Apply to the undersigned for further particulars.

K. MAHOMED ALI, K. B.,
Town Magistrate of Mysore.

KADUR DISTRICT.

NOTIFICATION.

The 14th August 1880.

Venkat Vardaiengar, Acting Amildar and 3rd Class Magistrate of the Lakvalli Taluk, is invested with the power specified in Clause 2, Section 23 (*b*) of the Criminal Procedure Code, *viz.*, power to entertain complaints and receive Police reports in cases in which he has jurisdiction to try, (Section 141).

S. VENKAT VARDAIENGAR,
District Magistrate.

SEASON REPORTS FOR THE MONTH OF JULY 1880.

Bangalore District.

Rain-fall.—The rain-fall as gauged at head-quarters was 9 inches 60 cents.

Crops.—The crops are reported to be in a thriving condition. Ragi, avare, togari, hutchellu and sáme were sown during the month, and Vaisak paddy harvested.

Health.—The public health has been good. Fever and ague prevailed in some of the taluks.

Mortality.—The mortality numbered 1,077 in the month of June against 1,034 in the previous month.

Cattle.—Murrain continued to prevail in the Taluks of Devanhalli, Dodballapur, Magadi and Closepet. The number of deaths from this source was 1,433. The number of deaths from all causes amounted to 4,082, of these 48 were caused by wild beasts.

Lands.—Lands assessed at Rs. 3,596—7—5 were taken up for cultivation.

L. RICKETTS,
Dy. Commissioner.

Mysore District.

Rain.—Rain fell in all taluks aggregating 12 inches 55 cents. It was less frequent towards close of month.

Crops.—The standing crops are flourishing. Cholam, sesamum, ragi and green and black-gram were harvested, while ragi and paddy were sown in some parts.

Health.—The public health has been on the whole good.

Cattle.—Murrain prevailed in all the taluks and the number of casualties from this cause is reported to be 1,438, while 927 from all other causes.

Prices.—The prices remain unchanged.

C. J. PEARSE,
Dy. Commissioner.

Chitaldroog District.

Weather.—The weather was windy and unpleasant. The fall of rain was very small during the month under report, compared with the fall during the corresponding month of 1879, as detailed below :—

	Rain-fall during July 1879.		Rain-fall during July 1880.			Rain-fall during July 1879.		Rain-fall during July 1880.	
	I.	C.	I.	C.		I.	C.	I.	C.
Chitaldroog ..	4	70¾	2	22½	Hiriyur ..	6	75	0	5
Davangere ..	3	8	2	14	Budihal ..	2	73	1	30
Kankuppa ..	4	17½	1	8¾	Hosdurga ..	4	90	2	79½
Dodéri ..	4	10½	0	31¼	Pavagada ..	8	20	0	40

The average reading of the thermometer at the District Head-quarters was 72·48 at 9-30 A. M., and 75·09 at 3-30 P. M. The general directions of the wind were west and south-west.

Crops.—The crops are reported to be in good condition in all parts of the District except in some parts of the Pavagada Taluk, where the crops are reported to be in want of rain. The seeds sown during the month were javari, linseed, black and green gram, ragi, paddy, kurasani, horse-gram, sajje, sáme, navane, harka, togari, castor-oil, baragu, &c. No crops were harvested during the month under report.

Lands paying an assessment of Rs. 4,647—11—0 were newly taken up for cultivation. No razinamas were tendered.

Health.—The health of the population was generally good. Fever prevailed in some parts of the District.

Cattle.—Cattle suffered from murrain, mouth and foot diseases in the Taluks of Chitaldroog and Dodéri. The total number of head lost from these and various other diseases were 630.

Prices.—The markets were fairly supplied with food grains. The average prices in the market were :—

Per rupee.	Per rupee.	Per rupee.
Rice 13 to 14 seers.	Ragi 30 to 36 seers.	Javari 33 seers.

ABDUL KHADER, K. B.,
Dy. Commr.

NOTICE.

The 17th August 1880.

The following machinery will be sold by public auction at the Dhobies' wells, Bangalore, on Wednesday, 15th September next.

A high pressure, horizontal, steam engine of 10 horse power, cylinder 10" diameter length of stroke 18", with all connections.

Four plunger pumps each 3½" diameter with 14" stroke.

One Cornish boiler, 15'-5" long and 5'-2" diameter with single flue and furnace suitable for burning wood.

The above were lately used at the Dhobies' well, Bangalore, for pumping purposes, and the engine is capable of throwing 12,000 gallons per hour to a height of 50 feet.

Terms of Sale.—Cash before delivery.

No person to be allowed to bid unless he has deposited Rs. 50 before the auction commences. The successful bidder to deposit cash, Government paper, or other security to the value of 25 per cent of the bid at the conclusion of the sale in addition to the previous deposit and to pay into the undersigned at his Office, Dickinson Road, on or before 12 noon on Wednesday, 22nd September, the remainder of the purchase money, on receipt of which the articles purchased will be handed over to him; failing this the articles will be re-sold at the risk of the former purchaser, who will also forfeit all money or security deposited by him.

The successful bidder to make his own arrangements for the removal of the articles purchased.

The engine, pumps and boiler can be viewed at any time between 8 A. M. and 4 P. M. on application to the undersigned.

F. J. ROMILLY, *Lieut.*, R. E.,
Asstt. Engineer.

NOTICE.

The 17th August 1880.

Tenders are invited for the supply of the following articles for the use of the Head-quarters' "Queen's Own" Sappers and Miners, for the 2nd half year of 1880-81 :—

Bamboos, 1st size, 35 feet long, 4½" to 3½" diameter at bottom	..	No.	10
Do 2nd size, 30 feet long, 3' to 2½" do	..	,,	10
Do 3rd size 25 feet long, 2¼" to 1¾" do	..	,,	10
Bamboos, common, 12 feet long 1½" to 2" ...	..	,,	10,000
Brushwood	..	Tons.	21
Husk, paddy	..	Bushels.	200
Timber, wood, fire, Babul or Tamarind	..	Tons.	50
Charcoal, Indian, common	..	Cwts.	79

The articles to be delivered at the Sapper Workshops at Bangalore, in such quantities as may be required from time to time by the Commandant.

A deposit of 10 per cent on the amount of his tender will be required from the person whose tender is accepted.

The lowest tender will not of necessity be accepted, and no reason will be given for rejecting any tender.

Tenders will be opened at the Quarter-Master's Office at 8 A. M., on Monday the 30th August 1880, after which date no tender will be received. Parties tendering are invited to attend.

Parties tendering are particularly requested to give their address in full.

H. N. D. PRENDERGAST, *Col.*, R. E.,
Commandant, "Q.'s O." S. & M.

ORDNANCE DEPOT.

NOTICE.

The 4th August 1880.

Tenders sealed with wax for the supply of baskets, bamboo, brooms, cakes, cow-dung, charcoal, Indian common husk paddy, oil, cocoanut, pots, earthen, and soops, common, to the Ordnance Depôt, Bangalore, for the year 1880—81, will be received by the Deputy Assistant Commissary of Ordnance up to noon on the 25th August 1880.

Lists of stores to be tendered for together with information as to the conditions of supply, &c., can be had on application to the Ordnance Depôt on any day, Sundays excepted, between the hours of 8 A. M. and 4 P. M.

Samples of stores to be tendered for can at the same time be seen.

F. CLARK, *Lieut.*,
Dy. Asstt. Commissary of Ordnance.

COMMISSARIAT DEPARTMENT.

NOTICE.

Húnsúr, the 30th July 1880.

The undermentioned elephants, the property of the Madras Government, will be sold by public auction at Mysore on Wednesday the 1st September 1880, for the reasons assigned opposite their respective names :—

1 "Deshkullah" ..	For being old and out of condition.
1 "Mothi guz" ..	For being vicious and dangerous to be employed with troops in camp.
1 "Min Bahadúr" ..	

By Order of the Commissary General,

Terms of Sale.—Cash.

H. R. NANGLE, *Major*,
Exec. Commissariat Officer.

GOVERNMENT CINCHONA FEBRIFUGE.

This preparation is an efficient substitute for Quinine and can be purchased by Government officers, for public and charitable purposes, and by any one taking *twenty pounds* at a time, from the Superintendent, Botanical Garden, Calcutta, *for cash only*, at the following rates:—per four ounce tin *Rs.* 4, *ans.* 8 ; per eight ounce tin *Rs.* 8, *ans.* 8 ; per pound tin *Rs.* 16, *ans.* 8. The general public can be supplied by the Superintendent, Botanical Garden, *for cash only*, at the undernoted rates:—per four ounce tin *Rs.* 5, *ans.* 8; per eight ounce tin *Rs.* 10, *ans.* 8 ; per pound tin *Rs.* 20. This medicine is also sold by the principal European and Native druggists in Calcutta. Postage eight annas per 4 and 8 *oz.* tins and twelve annas per pound tin, in addition to the foregoing rates.

THE

MYSORE GAZETTE.

Published by Authority.

BANGALORE, SATURDAY, AUGUST 28, 1880.

☞ Separate paging is given to this Part in order that it may be filed as a separate compilation.

PART II.

Notifications by the Judicial Commissioner, &c.

JUDICIAL DEPARTMENT.

IN THE COURT OF THE JUDICIAL COMMISSIONER OF COORG.

Civil Side.

Under Section 27, Chapter VI of the Legal Practitioners' Act, 1879, the Judicial Commissioner has made and issues the following Rules for regulating the fees payable by any party in respect of the fees of his Adversary's Pleader in the Courts of Coorg :—

1. The sums to be entered in the decrees of the Courts under the denomination of costs, as payable on account of fees of Pleaders, shall, unless the Court declare otherwise in its judgment, be calculated at the following rates :—

2. *First.*—On account of the Plaintiff's Pleader of the 1st Grade being an Advocate of any High Court, if the amount or value of the property, debt or damages shall not exceed Rs. 5,000, at 5 per cent on the amount or value decreed.

3. If the amount or value shall exceed Rs. 5,000 and not exceed Rs. 20,000, on Rs. 5,000 at 5 per cent, and on the remainder at 2 per cent.

4. If the amount or value shall exceed Rs. 20,000 and not exceed Rs. 50,000, on Rs. 20,000 as above, and on the remainder at 1 per cent.

5. If the amount or value shall exceed Rs. 50,000, on Rs. 50,000 as above, and on the remainder at ½ per cent.

6. On account of Plaintiff's Pleader of the 1st Grade not being an Advocate of any High Court, if the amount or value of the property, debt or damages decreed shall not exceed Rs. 5,000, at 3 per cent on the amount or value decreed.

7. If the amount or value shall exceed Rs. 5,000 and not exceed Rs. 20,000, on Rs. 5,000 at 3 per cent, and on the remainder at 1½ per cent.

8. If the amount or value shall exceed Rs. 20,000 and not exceed Rs. 50,000, on Rs 20,000 as above, and on the remainder at ½ per cent.

9. If the amount or value shall exceed Rs 50,000, on Rs. 50,000 as above, and on the remainder at ¼ per cent.

10. On account of Plaintiff's Pleader of the 2nd Grade, the fee allowed shall be at 2 per cent of the amount or value decreed.

Provided that—

(*a*) In no case shall the amount of any fee exceed Rs. 3,000.

(*b*) In cases undefended one half only of the fee calculated at the above rates shall be allowed.

(*c*) In no case except in cases of a nature cognizable by a Court of Small Causes shall the amount entered as payable on account of fee,

To a Pleader of the 1st Grade being an Advocate of any High Court	be less than Rs.	16.
Do do not being an Advocate of any High Court	,,	5
Do do 2nd Grade	,,	2

11. *Second.*—On account of Defendant's Pleader, the same rates as those specified above shall be allowed ; but the calculation shall be, where the suit is dismissed, on the amount at which the suit is valued in the Plaint ; or where the suit is partly decreed, on the difference between the amount decreed, and the amount of valuation.

12. The valuation of suits shall be ordinarily determined according to the rules laid down in the Court Fees' Act.

13. If in the opinion of the Court the questions in issue, in any case, are such, that the labor or skill of the Pleader would be inadequately acknowledged by a fee calculated on the above scale, the Court may, for reasons to be recorded in its judgment, follow in the place of the scale laid down in Rule 1, the scale specified below in determining the amount payable on account of the Pleaders' fee :—

To a Pleader of the 1st Grade being an Advocate of any High Court.	Any sum between Rs.	160 and 16
Pleader of the 1st Grade not being an Advocate of any High Court.	,,	50 and 5
Pleader of the 2nd Grade.	,,	25 and 2

14. In suits where it is not possible to estimate at a money value the subject matter in dispute, and in miscellaneous and insolvent proceedings, the amount to be awarded on account of the Advocate or Pleader's fee shall be fixed by the Court at its discretion, but it shall not exceed the scale specified below :—

To a Pleader of the 1st Grade being an Advocate of any High Court..	Rs.	160
Pleader of the 1st Grade not being an Advocate of any High Court ..	,,	50
Pleader of the 2nd Grade	,,	25

15. When the hearing of a suit is adjourned under Section 156 of the Code of Civil Procedure, the Court may include among the costs occasioned by such adjournment, to be paid by the party applying for time, Pleader's fees at the following scale :—

Any sum not exceeding (except for special reasons which shall be recorded).

For a Pleader of the 1st Grade being an Advocate of any High Court..	Rs.	32
Pleader of the 1st Grade not being an Advocate of any High Court..	,,	10
Pleader of the 2nd Grade ..	,,	4

16. In a case where there are several Defendants, not more than one Pleader's fee shall be allowed, except in respect of a separate defence set up by a Defendant who has a separate interest.

17. The amount to be allowed on account of Pleaders' fees in appeals shall be calculated on the same scale as in original suits ; and the principles of the above rules, as to original suits, shall be applied as nearly as may be to appeals.

NOTIFICATION.

The 25th August 1880.

The undermentioned person has been enrolled as 2nd Grade Pleader in the Courts of Coorg, under the Rules of 23rd December 1879 :—

6. Gudandra Bommaiya ... Proposing to practise in the Courts of Coorg.

J. D. SANDFORD,
Judicial Commissioner.

INAM DEPARTMENT.

NOTIFICATION.

No. 5. *The 6th August* 1880.

Whereas the original title-deeds, numbers noted in the annexed schedule, are reported to have been lost, it is hereby notified for public information that the same are declared to be cancelled and duplicates of the same numbers and dates have this day been issued :—

Serial Number.	Taluk.	Village.	Name of the Inamdar.	Description of Inam.	Number of Title-Deeds.	Particulars.					Date of issue of Title-Deeds.
						Description of Land.	Extent.	Assessment.	Jodi.	Combined Quit-Rent.	
							K. C. P.	R. A. P.			
1	Koratagere ...	Kerekallahalli jodi.	Lakkur, Malur Taluk, Ramachar.	Personal.	1047	Dry Perambo-ke.	6 7 14 2 16 13				6th August 1880.
							9 4 11	64 0 0	9 0 4	16 0 0	
2	Channagiri ...	Donihalli ..	The Managers for the time being of the Pagoda of Basavanna Devar at Donihalli.	Devadaya	196	Dry No. 88.	A. C. 0 59	1 11 3	0 13 7	1 0 0	
3	Do ..	Do ...	Do of Ranganatha Devar at Donihalli.	Do ...	197	Do 129...	1·07	3 0 9	1 5 2	1 8 0	
4	Goribidnur ...	Upparhalli ...	Shamapura Anantachar ...	Personal.	38685	Do 49...	K. C. P. 0 0 3	0 1 9	...	0 2 0	
					409						

R. A. COLE,
Supt. of Inam Settlements.

FINANCIAL DEPARTMENT.

MYSORE BUDGET ESTIMATE OF 1881—82.

Circular No. 1479, *dated* 19*th August* 1880.

The Deputy Accountant General has the honor to request that the Heads of Offices and Departments will be good enough to prepare their Budget Estimates of Receipts and Disbursements for the year 1881—82 in the forms hitherto in use and despatch them to this Office not later than the 15th October next.

Forms of District Budgets will be supplied at once to the Deputy Commissioners from this Office.

H. HUDSON,
Dy. Acct. General in Mysore.

MEDICAL DEPARTMENT.

NOTIFICATION.

No. 581. *The 27th August* 1880.

The following removals are ordered of Medical Pupils classified in the order of merit in which they passed their half-yearly (pre-collegiate) examination:—

No.	Rank.	Names.	From—	To—	Remarks.
1	Medical Pupil, 1st year.	V. Tambusami Pille ...	Civil Hospital, Mysore.	Medical College, Madras, to join on the 1st of October 1880, for a three years' course.	
2		A. N. Krishnasami Modaliar ...	Civil Dispensary, Closepet.		
3		G. V. Rangaramanjula Naidu ...	Bowring Civil Hospital.		
4		T. V. Ramakrishna Pille ...	do		
5		M. Partasarthi Modaliar ...	do		
6		P. Raya Pille ...	Civil Hospital, Mysore.		
7		J. M. Gnanasigamani Pille ...	Pettah Dispensary.		
8		D. S. Amurthavasagam Pille ...	do		

J. HOUSTON, M. D., *Surgeon-Major,*
Surgeon to the Mysore Commn.

NUNDYDROOG DIVISION.

NOTIFICATION.

The 24th August 1880.

Sessions for the Kolar District will be held at Kolar on Monday the 6th September 1880, and following days.

The case mentioned below is posted for trial:—

Magisterial No.	Sessions No.	Names of Prisoners.	Name of the Committing Magistrate.	Sections charged under—	Date of Committal.
32 of 1880.	12	1. Amas Ganga 2. Amas Timma 3. Vuyal Ganga 4. Vuyal Chik Ganga 5. Vuyal Muniga 6. Naga *alias* Iriga Muniga 7. Nallaboyi Ganga 8. Venkatiga 9. Muniga 10. Muniga	Mr. Ramaswamaiyer, Munsiff and 2nd Class Magistrate, Chikballapur.	395, I. P. C.	10th August 1880.

The Magistrate above named is hereby directed to cause all parties connected with the above noted case to be in attendance at Kolar before the Sessions Court on Monday the 6th day of September 1880, at 11 A. M.

All cases committed prior to that date will be taken up for trial in addition to the above.

T. R. A. THUMBOO CHETTY,
Sessions Judge.

COORG.

NOTIFICATION.

The 24th August 1880.

Notice is hereby given for general information that the arrears due on the undermentioned coffee estate in Coorg being still unpaid, it will be put up to public auction at the 2nd Assistant Superintendent's Office at Mercara, at noon on Thursday 4th November 1880, and sold in view to the recovery of the outstandings.

Survey No.	Title-deed No.	Name of Defaulter.	Name of Estate.	Taluk, Nad and Village.	Area.	Purchase Money.	Balance of Assessment for 1878-79.	Assessment for 1879-80.	Total due and upset price.	Boundaries. North.	South.	East.	West.
235	...	Kambiana Muttanna.	Bayikabbe Male.	Nelaji village in Padinalknad of the Padinalknad Taluk.	1342·66 Grass 282·10 / 1060·56	400 0 0	1,238 15 11	2,121 1 11	3,760 1 10	Nelaji village, Coorg. Kaibili Madu's paisari, Chinnekolli Male cardamom jungle and Govt. paisari grass hill.	Naladi village, Coorg Kodimaniyana Appanna's jamma Iynutomberi male cardamom jungle and Gollara Pongara Madu's paisari Angarekolli Male cardamom jungle.	Government paisari jungle.	Beppunadu Bellumadu village, Coorg Mattanda Madaiya's Govt. paisari Kochemale cardamom jungle, Coorg Chiyakpuvana Appaiya's Kochemale cardamom jungle, Nelaji village, Coorg Malayana Ponnappa's Govt. paisari Kochimbari cardamom jungle, Nelaji village, Coorg Malayana Monacha's Kochimbari jamma cardamom jungle, Coorg. Chiyakapuvana Appaiya's Kochimbari jamma cardamom jungles, Nelaji village, and Nelaji village, Coorg. Appumaniyana Muttanna's jamma yadapalmale cardamom jungle.

N. B.—The purchaser will be subject to pay the assessment for the current year *viz.*, 1880—81.

Conditions of sale.—Para.—1. The highest bidder will be the purchaser subject to confirmation of sale, provided he deposit 25 per cent of the purchase money immediately; should he fail to make such deposit the lot will be put up again.

2. The balance of the purchase money must be paid before noon of the 30th day from the date of sale, but if that day happens to be a Sunday or holiday the payment must be made before noon on the next office day.

3. Should the purchaser fail to pay the balance of the purchase money within the time fixed, the sale will be cancelled, the deposit will be forfeited and the land may be again put up to auction. The defaulting purchaser will be liable for any deficiency in the amount realized by the re-sale, and in the calculation of such deficiency the deposit that has been forfeited shall not be reckoned. The defaulting purchaser at the first sale shall moreover have no claim to any surplus that may be realized by the re-sale.

4. Any amount due from a defaulting purchaser may be recovered under the rules or practice in force for the recovery of arrears of land revenue.

5. All sales and re-sales shall be subject to confirmation by the Superintendent of Coorg, who may order any sale or re-sale to be cancelled. The decision of the Superintendent is open to revision by the Chief Commissioner and may be modified or reversed by him. If within three months from the date of sale, the Superintendent shall not have reversed the sale or re-sale, the same shall be held to have been confirmed by him.

6. In any case in which a sale or re-sale may be cancelled, the purchaser will receive back the money or deposit paid by him, but will have no claims to interest or damages.

H. G. THOMSON,
Superintendent.

SEASON REPORTS FOR THE MONTH OF JULY 1880.

Kolar District.

Rain-fall.—The average rain-fall during the month was 2 inches 52 cents.

Lands.—Lands assessed at Rs. 2,322—2—4 were taken up for cultivation, while none was relinquished during the month.

Seeds sown.—Ragi, ballar, tuvar, sáme, sajje and paddy.

Crops.—Since improving.

Health.—Generally good.

Casualties among Cattle.—

	In June.	In July.
Cows and bulls	3,350	3,159
Buffaloes	1,351	724
Sheep and goats	2,074	2,072
Horses	18	9
Asses	38	47
Total....	6,831	6,011

A. COOPOOSAWMY MODALIAR,
For Dy. Commr.

Túmkúr District.

Rain.—Rain fell throughout the District during the month. The total fall gauged at each Taluk Head-quarters was as follows :—

	I.	C.		I.	C.
Túmkúr	4	15	Sira	0	30
Koratagere	2	40	Kunigal	4	40
Maddagiri	0	48	Kadaba	3	60
Chiknayakanhalli	0	41	Honnavalli	0	50
			Total....	16	24

Weather.—Cloudy.

Crops.—Ragi, ballar, dál, castor-oil seed, sáme, harka, navane, chillies, sesamum seed and punaji paddy were sown. No crops harvested.

Public Health.—The health of the District was good. The total number of deaths reported from all causes was 608 in June against 662 in May.

Cattle.—Dod roga is still prevalent throughout the District. The deaths among cattle were 2,339 against 1,132 and most of them were in Túmkúr, Kunigal and Kadaba Taluks.

Lands.—Lands assessed at Rs. 4,826—13—7 were taken up for cultivation while none were relinquished.

Prices.—Rice, ragi, dál, ballar, horse-gram and wheat were sold at 14 seers, 2 chittaks, 33 S. 2. C. 15 S. 2 C. 30 S. 6 C. 36 S. 6 C., and 9 S., per rupee, respectively.

K. SESHADRI IYER,
Dy. Commissioner.

Kadur District.

Rain-fall.—The following table shews the rain-fall at the head-quarters of taluks and the surrounding coffee estates during the month :—

Taluks.	I.	C.	*Estates.*	I.	C.
Chikmagalur ..	5	30	Santaveri	16	75
Tarikere ..	4	21	Balur	29	74
Lakvalli.. ..	19	30	Alikan	40	90
Koppa	42	85	Nemar	64	33
Banavar..	1	52	Mailimane	16	51
Múdgere ..	22	5	Qualdhitlu	47	5
Kadur.. ..	1	17	Ambodikan	43	15
			Basgode	21	23
			Kare-hadlu	26	21

The rain that fell at Chikmagalur in this month was 5 inches and 30 cents against 6 inches and 31 cents in the previous month and 6 inches and 36 cents in July 1879.

Thermometer.—The average readings of the thermometer were as shewn below in the meteorological register as recorded at the Civil Dispensary at Chikmagalur.

	9—30 A. M.	3—30 P. M.		9—30 A. M.	3—30 P. M
June 1880 ..	73·13	71·8	July 1880 ..	70·74	69·64

Seeds sown.—Ragi and ballar in the Tarikere Taluk ; dod-ragi, avare, oil-seeds and sáme in the Chikmagalur and Banavar Taluks ; paddy seedlings are being transplanted in Koppa, Chikmagalur and Múdgere Taluks ; sajje, bargu, harka, dál, navane, javari and chillies in the Banavar Taluk.

Condition of Crops.—Good.

Crops harvested.—Sugar-cane and paddy in the Banavar Taluk.

Coffee Prospects.—Promising.

Health.—Fever prevails to some extent in the Banavar and Koppa Taluks.

Live-stock.—Hoof and mouth disease prevailed in all the taluks. The loss of cattle was 957 in this against 829 in the previous month and 505 in July 1879.

Lands.—Land assessed at Rs. 3,187—13—4 was newly taken up for cultivation. Relinquishments of land brought to account in the month amount to Rs. 7,639—8—0.

Prices.—Slight rise in the price of rice at Tarikere, Koppa and Banavar, and a fall in the price of ragi from 24 to 28 seers at Chikmagalur.

S. VENKAT VARDAIENGAR,
Offg. Dy. Commr.

Abstract of Meteorological Reports received from Head-Quarters of Districts in the Province of Mysore, from 1st to 15th August 1880.

DISTRICT.	Thermometer. *Averages for the haf month.* 9-30 A. M. Dry bulb.	Wet bulb.	Differ-ence.	3-30 P. M. Dry bulb.	Wet bulb.	Differ-ence.	Thermometer. Maximum.	Minimum.	Rain. Inches.	Cents.	Wind.
Kolar	73	...	...	76	...	...	78	67	3	50	S. W.
Túmkúr ...	75	65	10	86	75	11	87	61	2	37	S. W.
Mysore*... ...	...	...	..	...	...	...	...	...	...	...	...
Hassan	64	35	29	73	40	33	76	61	2	46	W.
Shimoga ...	75	...	...	77	...	...	..	...	1	8	S. W.
Kadur ...	72	61	11	72	66	6	75	61	1	71	S. W.
Chitaldroog ...	72	...	...	75	...	...	...	...	...	71	S. W.

*Information not received.

POSTAL NOTICE.

The 21st August 1880.

Applications will be received by the undersigned for appointments as Postmen in this Office from persons having some knowledge of English and of one or more of the Vernaculars. Applications to be supported by testimonials of character and qualification. Names of the selected men will be recorded in this Office for appointment as vacancies occur.

H. M. D'ROZARIO,
Acting Postmaster.

NOTICE.

The 21st August 1880.

There will be an auction of old material at the D. P. W. Store Shed near Victoria Road on Thursday, 2nd September 1880, at 7 A. M.

F. J. ROMILLY, *Lieut.*, R. E.,
Asstt. Engineer.

NOTICE.

The 17th August 1880.

Tenders are invited for the supply of the following articles for the use of the Head-quarters "Queen's Own" Sappers and Miners, for the 2nd half year of 1880-81 :—

Bamboos, 1st size, 35 feet long, $4\frac{1}{2}''$ to $3\frac{1}{2}''$ diameter at bottom	..	No.	10
Do 2nd size, 30 feet long, 3'' to $2\frac{1}{2}''$ do	..	,,	10
Do 3rd size 25 feet long, $2\frac{1}{4}''$ to $1\frac{3}{4}''$ do	..	,,	10
Bamboos, common, 12 feet long $1\frac{1}{2}''$ to 2'' ..	..	,,	10,000
Brushwood	..	Tons.	2
Husk, paddy	..	Bushels.	200
Timber, wood, fire, Babul or Tamarind	..	Tons.	50
Charcoal, Indian, common	..	Cwts.	79

The articles to be delivered at the Sapper Workshops at Bangalore, in such quantities as may be required from time to time by the Commandant.

A deposit of 10 per cent on the amount of his tender will be required from the person whose tender is accepted.

The lowest tender will not of necessity be accepted, and no reason will be given for rejecting any tender.

Tenders will be opened at the Quarter-Master's Office at 8 A. M., on Monday the 30th August 1880, after which date no tender will be received. Parties tendering are invited to attend.

Parties tendering are particularly requested to give their address in full.

H. N. D. PRENDERGAST, *Col.*, R. E.,
Commandant, "Q.'s O." S. & M.

COMMISSARIAT DEPARTMENT.

NOTICE.

Húnsúr, the 30th July 1880.

The undermentioned elephants, the property of the Madras Government, will be sold by public auction at Mysore on Wednesday the 1st September 1880, for the reasons assigned opposite their respective names :—

1 "Deshkullah"	..	For being old and out of condition.
1 "Mothi guz"	..	For being vicious and dangerous to be employed with troops in camp.
1 "Min Bahadúr"	..	

By Order of the Commissary General,

Terms of Sale.—Cash.

H. R. NANGLE, *Major*,
Exec. Commissariat Officer.

THE

MYSORE GAZETTE.

Published by Authority.

BANGALORE, SATURDAY, SEPTEMBER 4, 1880.

☞ Separate paging is given to this Part in order that it may be filed as a separate compilation.

PART II.

Notifications by the Judicial Commissioner, &c.

JUDICIAL DEPARTMENT.

NOTIFICATION.

The 27th August 1880.

The undermentioned gentleman has been enrolled as 1st Grade Pleader in the Courts of Coorg, under the Rules of 23rd December 1879 :—

Mr. P. Singarachar.

J. D. SANDFORD,
Judicial Commissioner.

EDUCATIONAL DEPARTMENT.

NOTIFICATION.

The 30th August 1880.

MIDDLE SCHOOL EXAMINATION.

The following Notifications received from the Commissioner for the U. C. S. Examinations are published for general information. Printed forms of application may be obtained from the undersigned.

L. RICE,
Director of Public Instruction,
Mysore and Coorg.

The 31st August 1880.

Revised Notification.—In connection with the Notification of Government, dated the 31st ultimo, and published in the *Fort St. George Gazette*, under date the 10th instant, copy of which is republished along with this Notification for the information and guidance of candidates, it is hereby notified that the

Middle School Examination, which will henceforth take the place of the General Test, will be held on the 1st December and four following days, at the following places :—

Burhampore,	Cumbum,	Palghat,	Trevandrum,
Chicacole,	Cuddapah,	Kumbakonam,	Cochin (Ernakulam),
Vizagapatam,	Bellary,	Nagapatam,	Calicut,
Vizianagrum,	Nellore,	Tranquebar,	Tellicherry,
Rajahmundry,	Chittúr,	Tanjore,	Mangalore,
Cocanada,	Vellore,	Trichinopoly,	Bangalore,
Ellore.	Madras,	Madura,	Ootacamund,
Masulipatam,	Cuddalore,	Ramnad,	Secunderabad,
Guntúr,	Salem,	Palamcottah,	Mysore and Shimoga.
Kurnool,	Coimbatore,	Nagercoil,	

2. Candidates must send in their applications on printed forms, which may be obtained from all Tahsildars and Treasury Deputy Collectors. The forms of application must reach the Collectors of the Districts in which Candidates desire to be examined on or before the 15th September next. Under no circumstances will applications received after that date be accepted.

Note.—For Trevandrum *and* Cochin *the applications should be sent to the* Resident of Travancore; *for* Bangalore, Mysore and Shimoga *to the* Director of Public Instruction, Bangalore, *and for* Secunderabad, *to the* Executive Commissariat Officer, Secunderabad.

3. The fee will be Rs. 3 in the case of pupils in schools, *i. e.*, those who are actually borne on the rolls of a school as pupils of the Upper Fourth Class or class of similar standard at the time of making the application for admission to the examination, and whose names have been on the rolls for a period of not less than three months preceding the date of application, and who certify to their intention to remain in the school until the end of the calendar year. In the case of all other persons, the fee will be Rs. 7. In both cases the fee should be paid into the Bank of Madras, or local Government Treasuries and the Treasury receipts forwarded with the applications to this office through the Collector of the District. The fee will not be returned under any circumstances. A pupil in a school must forward a certificate from the Head Master of the school in which he or she is studying, in form appended to the application, and must also sign the declaration entered thereunder.

4. (*a*) Candidates who obtain a 2nd-Class Certificate at the Middle School Examination will be at liberty to appear again at a subsequent examination with the view of obtaining a 1st-Class Certificate.

(*b*) Candidates who obtain a 1st-Class Certificate but pass in one language only, will be permitted to appear at a subsequent examination in another language with the view of obtaining a *perfect* Certificate under Rule 22 of the Grant-in-aid Code, as Fourth-grade Schoolmasters or 2nd Grade Schoolmistresses.

5. Matriculates who have hitherto had to pass the test in Writing and Spelling will, for the future, be examined in Writing *only* for employment in the Public Service, and the examination in this subject will be held at the same time as the Middle School Examination. Those who wish to be examined in December next will be supplied with a special form of application through the Collectors on payment of the usual fee of Rupees 2.

6. The examination for officials in the service of Government prior to 1st June 1867, for whom a modification of the examination was sanctioned by Government, as notified under date the 26 July 1876, will be held at the same time as the Middle School Examination. In this case candidates should apply to the undersigned direct on a special form which will be supplied on application to this office. The fee for this test will, as heretofore, be Rs. 3, which should be remitted by a Money Order.

No candidate will be admitted to the above examinations at any other place than that named in his application, and no candidate will be allowed to name more than one place. To prevent mistakes candidates should submit their applications direct to the Collectors of the Districts in which the stations at which they desire to be examined are situated.

This Notification supersedes that issued on the 23rd instant.

By Order,

B. LOVERY,
Acting Secretary.

The 31st July 1880.

An examination, styled the Middle School Examination, shall be held annually under the superintendence of the Commissioner for the Uncovenanted Civil Service Examinations at such stations as may be determined on from time to time, and shall be open to all male and female candidates. It shall commence on the 1st December, or if that day falls on a Sunday, on the 2nd December.

2. The fee in the case of pupils in schools shall be Rupees 3, and in the case of all other persons Rupees 7.

3. Candidates must send in their applications on printed forms, which may be obtained from all Tahsildars and Treasury Deputy Collectors. The forms of application must reach the Collectors of the districts in which the candidates desire to be examined on or before the 15th September. Under no circumstances will applications received after that date be accepted.

4. Candidates must pay to the officers, from whom they obtain the form of application, the prescribed fee, a receipt for which will be given separately, and also on the face of the form which is supplied to them. The fee must be paid in every case without exception, and will not be returned under any circumstances.

5. No candidate will be admitted to the examination at any other place than that named in his or her application. To prevent mistakes, candidates should submit their applications direct to the Collector of the district, in which the station at which they desire to be examined is situated.

6. Every male candidate must be examined in six, and in not more than six, and every female candidate in five, and not more than five of the following branches. All candidates must come up in Branches C and D and in Branches A or B. The choice of the remaining branches is left to the candidates:—

A. ENGLISH (120 MARKS).

(*a*) Handwriting.—Copying rapidly and in a good clear hand a manuscript or lithographed paper (20 marks).

(*b*) Orthography.—Writing from dictation a passage from a book equal in difficulty to the Supplement to the Fourth Book (20 marks).

(*c*) Translating into the vernacular one or more passages from a book, not previously studied, equal in difficulty to Chambers' Moral Class Book (30 marks); or if the candidate knows no vernacular, Paraphrasing one or more passages of poetry, not previously studied, equal in difficulty to Selections in Poetry No. 1 (30 marks).

(*d*) Translating a vernacular letter or easy narrative into English (30 marks),
or, if the candidate knows no vernacular,
Writing a letter on a given subject (30 marks).

(*e*) Grammar as contained in Dr. R. Morris English Grammar (Macmillan's Primer Series), and Sullivan's Attempt to simplify English Grammar, pages 1 to 120, or any similar books (20 marks).

B. SECOND LANGUAGE (120 MARKS).

(1) *Tamil, Telugu, Malayalam, Canarese, Uriya, Hindustani, and Persian.*

(*a*) Handwriting.—Copying rapidly and in a good clear hand a manuscript or lithographed paper (20 marks).

(*b*) Orthography.—Writing from dictation (20 marks).

(*c*) Composition, such as a description of a place, an account of some useful, natural, or artificial product, or the like (30 marks).

(*d*) Grammar as contained in the Grammars used in the third, lower fourth, and upper fourth classes of a Government School or any others of equal difficulty (20 marks).

(*e*) Text Book.—The following or such books as may from time to time be prescribed for Government Schools (30 marks) :—

Tamil.—Poetical Anthology, No. II.
Telugu.—Nala Charitram.
Malayalam.—Panchatantram, Part II.
Kanarese,—Poetical Anthology published by the Basel Mission Press.
Uriya.—Ramayana Sundra Kanda.
Hindustani.—Urdu Poetical Reader, Majmuah Sakhun, Part II, pages 1 to 30.
Persian. Gulistan (expurgated edition), Books II and III.

(*II*) *Latin.*

(*a*) Grammar, as contained in the Public School Latin Primer or any similar book, to the end of Syntax (60 marks).

(*b*) Text-book.—Cæsar De, Bello Gallico, Book I, Chapters 1 to 29, or such book as may from time to time be prescribed (30 marks).

(*c*) Translating easy sentences into Latin (30 marks).

(*III*) *Sanskrit.*

(*a*) Handwriting.—Copying in a good clear hand a passage printed in the Devanagari character (20 marks).

(*b*) Orthography.—Writing from dictation in the Devanagari character (20 marks).

(*c*) Grammar.—The letters, Guna, Vriddhi, Visarga, &c. Declension of regular nouns. Conjugation of verbs of the 1st, 4th, 6th, and 10th classes in the Present Indicative (commonly called Present *Laṭ*), Present Potential or Optative (commonly called Potential or Optative *vidhi lin*), Present Imperative (commonly called Imperative *Lóṭ*) and Imperfect Indicative (commonly called Imperfect *Laṅ*) (40 marks).

(*d*) Text-book.—Hitopadesa. Mitralabha from the commencement up to the 30th sloka inclusive, or such book as may from time to time be prescribed (20 marks).

(*e*) Translating easy sentences into Sanskrit (20 marks).

C. ARITHMETIC (80 MARKS).

The first four simple and compound rules, reduction, vulgar and decimal fractions, simple and compound proportion.

(English figures must be used, and the candidate must be acquainted with the principal Indian weights and measures.)

D. GEOGRAPHY AND INDIAN HISTORY (100 MARKS).

(*a*) The Geography of Asia and Europe as contained in Clyde's Elementary Geography or any similar book (25 marks).

(*b*) The Geography of India as contained in Duncan's Geography of India, pages 1 to 106, or any similar book (25 marks).

(*c*) The History of India to the Battle of Jubbulpore in 1817 (50 marks).

E. MATHEMATICS (60 MARKS).

(*a*) Euclid, Book I (35 marks).

(*b*) Algebra to the end of fractions (25 marks).

F. PHYSICAL GEOGRAPHY (60 MARKS).

Geikie's Physical Geography (Macmillan's Science Primer), or any similar book.

G. PHYSIOLOGY OR HYGIENE (60 MARKS).

(a) Foster's Physiology (Science Primer), or any similar book, or
(b) Dr. Cunningham's Sanitary Primer, First Lessons in Health by J. Berners, Personal Care of Health by Dr. Parker, Dr. Dhanakoti Raju's Elements of Hygiene, or any similar book.

H. POLITICAL ECONOMY (60 MARKS).

Archbishop Whately's Easy Lessons on Money Matters, or any similar book.

I. AGRICULTURE (60 MARKS).

Robertson's Agricultural Class Book or any similar book.

J. ENGLISH HISTORY (60 MARKS).

The History of England to the Accession of Henry IV.

7. The Examination will be conducted in the order of time and subjects shewn below :—

Days.	Hours.	Subjects.
First	10 — 1 ...	Geography and Indian History.
Do	2 — 4 ...	Arithmetic.
Do	4 — 4½ ...	English Handwriting.
Second	10 —12½ ...	Translation, &c. and English Grammar.
Do	12½— 1 ...	English Dictation.
Do	2 — 4 ...	Mathematics.
Do	4 — 4½ ...	Handwriting in Second Language.
Third	10 —12½ ...	Second Language. Composition, Grammar and Text Book.
Do	12½— 1 ...	Second Language. Dictation.
Do	2 — 4 ...	English History.
Fourth	10 —12 ..	Physical Geography.
Do	2 — 4 ...	Physiology or Hygiene.
Fifth	10 —12 ...	Political Economy.
Do	2 — 4 ...	Agriculture.

8. Marks will be deducted for bad writing and spelling in every subject. In non-language subjects however, the deductions for spelling will not exceed 10 per cent of the maximum and for writing 5 per cent of the maximum number of marks for each branch.

9. Candidates who bring up English must answer the non-language papers in English. Candidates who do not bring up English may answer them in the Vernacular.

10. The candidates will be ranked in the order of proficiency, as determined by the total number of marks obtained by each, and will be arranged in two classes.

11. Candidates who bring up English will be ranked in the first class, provided they obtain not less than—

(a) Sixty per cent of the maximum marks in English handwriting.

(b) One-half of the maximum marks in Branch C, Arithmetic.

(c) One-third of the maximum marks in Branch A, English.

(d) One-fourth of the Maximum marks in every other branch in which the candidate has been examined.

(e) One-half of the aggregate number of marks.

12. They will be ranked in the second class, provided they obtain not less than—

(a) One-third of the maximum marks in English handwriting.

(b) One-fourth of the maximum marks in Branches A, English, and C, Arithmetic.

(c) One-third of the aggregate number of marks.

13. Candidates who do not bring up English will be ranked in the first class, provided they obtain not less than—

(a) Sixty per cent of the maximum marks for handwriting in the language selected by them.

(b) One-half of the maximum marks in Branch C, Arithmetic.

(c) One-third of the maximum marks in Branch B, Vernacular.

(d) One-fourth of the maximum marks in every other branch in which the candidate has been examined.

(e) One-half of the aggregate number of marks.

14. They will be ranked in the second class, provided they obtain not less than—

(a) One-third of the maximum marks for handwriting in the language selected.

(b) One-fourth of the maximum marks in Branches B, Alternative Language, and C, Arithmetic.

(c) One-third of the aggregate number of marks.

15. Certificates will be issued by the Commissioner to the passed candidates, specifying the subjects in which they have been examined and the class in which they have been placed.

16. A first-class certificate will render the holder eligible, on attaining the age of eighteen, to appointments under Government of the value of Rs. 20 and upwards, provided that any such appointment requires a knowledge of only the language or languages in which the candidate has passed; and shall suffice for admission to the Special Tests.

17. It is to be distinctly understood that the Government do not undertake to provide appointments for all persons who may pass the prescribed examinations under these rules. Appointments will, as before, be regulated by the requirements of the public service, and will be made by the same authorities as heretofore. It is likewise to be understood that it will still, as before, be open to Government, and, with their sanction, to the Controlling Courts and Boards, whenever they see necessary to prescribe the period of service which must be passed in one grade of appointment before promotion to a higher grade altogether irrespective of these rules.

18. In the Educational Department a first-class certificate will be accepted as equivalent to the general education test for fourth-grade school-masters and second-grade schoolmistresses. In the case, however, of candidates who have passed only in one language, the certificate will be held only equivalent to the general education test required for an imperfect certificate. The holder of a first-class certificate whether, perfect or imperfect, will still be required in the case of males to pass the departmental examination in method and teaching a class, and in the case of females, in method, needlework, and teaching a class.

19. A first or second-class certificate will qualify any person for admission as a pupil into the upper department of a High School, provided that no person shall be admitted into an English High School unless he or she has passed the examination in English.

20. This Notification supersedes all previous Notifications on the subject.

(By order of His Grace the Governor in Council.)

R. DAVIDSON,
Chief Secretary.

BANGALORE DISTRICT.

NOTIFICATION.

The 2nd September 1880.

It is hereby notified that the undermentioned immovable properties of proclaimed offender D. Sétu Rao, late Khazana Bakshi of the Chief Commissioner's Treasury, will be resold by public auction at the respective premises at 1 o'clock in the afternoon of the 23rd September 1880.

Terms of sale.

Purchasers should, as soon as the sale is concluded, deposit 25 per cent of the purchase money, and pay up the balance within 15 days from the date of sale. In case of default of payment as aforesaid, the property will be sold again at the risk of the defaulting purchaser, who will be held responsible for any loss that may be incurred in consequence of such default.

Properties.

1. House situated at Siddikatte of Bangalore, measuring 113 × 42 feet.

2. Two rooms and a cow-shed in front of the said house, as also the right, title and interest of D. Sétu Rao in a well and a mantapa, all continuously situated, measuring 96 × 36 feet.

3. A coach godown adjoining house No. 4 and measuring 27 × 10 feet with the right, title and interest of D. Sétu Rao therein.

4. House situated at Siddikatte of Bangalore, now in the occupation of D. Sétu Rao's son-in-law Rama Rao, (right, title and interest of D. Sétu Rao).

L. RICKETTS,
District Magistrate.

MYSORE DISTRICT.

NOTIFICATION.

The 27th August 1880.

The sale of the stray Australian bay gelding alluded to in the Notice of the 13th instant, is cancelled.

MAHOMED ALI, K. B.,
Town Magistrate of Mysore.

HASSAN DISTRICT.

NOTIFICATION.

The 31st August 1880.

Mr. C. Venkat Rao, Munsiff and 3rd Class Magistrate of the Hassan Sub-Division, and Ramanujaiengar, Amildar and 3rd Class Magistrate of the Hassan Taluk, are hereby invested with the following powers under Sections 25 and 23 of the Criminal Procedure Code, Act X of 1872, respectively :—

1. Power to issue order to prevent obstruction, &c., (Section 518).

2. Power to issue order prohibiting repetition of nuisance (Section 519).

W. HILL,
District Magistrate.

Season Report of the Coorg Province for the month of July 1880.

Wet land.—Transplanting for the Kartika rice crop nearly completed.

Ragi—Is coming into ear and looks well on the whole.

Cardamoms.—Prospects continue good.

Coffee.—The crop does not promise well, and there is still difficulty about labor.

Cattle.—The mortality amongst the cattle was 810 against 1,269 in the same month of last year, and is classified as follows :—

Bulls 225 ; cows 182 ; calves 140 ; he-buffaloes 109 ; she-buffaloes 76 ; calves 78 ; total 810.

Market-rates.—Stationary.

Rain-fall.—Mercara—

	Inches.	Cents.
In July 1880 ..	51	38
Total Rain-fall	90	54

Somavarpet—

In July 1880 ..	40	26
Total Rain-fall	69	04

H. G. THOMSON,
Superintendent.

Deaths registered in the Town and Cantonment of Bangalore for the Week ending 30th July 1880.

Estimated Population. { Males. .. 72,236
Females.. 70,277

Total.... 142,513

Diseases.	M.	F.	Total.
Cholera	...	...	...
Small-pox	...	...	...
Fevers	8	14	22
Bowel-complaints ...	5	2	7
Suicide	...	...	...
Wounding	...	...	...
Accident	...	1	1
Snake-bite or killed by wild beasts.	...	...	...
All other causes ...	14	10	24
Total.....	27	27	54
Births during the week ...	33	33	66

Deaths registered in the Town of Mysore for the Week ending 30th July 1880.

Estimated Population. { Males .. 29,081
Females .. 28,734

Total.... 57,815

Diseases.	M.	F.	Total.
Cholera	...	...	...
Small-pox	..	..	...
Fevers	6	1	7
Bowel-complaints	2	3	5
Suicide	...	...	...
Wounding	...	...	...
Accident	..	...	...
Snake-bite or killed by wild beasts ..	...	...	...
All other causes	...	...	...
Total.....	8	4	12
Births during the week ...	7	6	13

Deaths registered in the Town and Cantonment of Bangalore for the Week ending 6th August 1880,

Estimated Population. { Males .. 72,236 / Females .. 70,277 }

Total.... 142,513

Diseases.	M.	F.	Total
Cholera	...	...	...
Small-pox	...	...	...
Fevers	8	4	12
Bowel-complaints	5	1	6
Suicide	...	...	...
Wounding	...	...	...
Accident	...	...	...
Snake-bite or killed by wild beasts.	...	...	...
All other causes	11	9	20
Total.....	24	14	38
Births during the week ...	45	30	75

Deaths registered in the Town of Mysore for the Week ending 6th August 1880.

Estimated Population. { Males .. 29,081 / Females .. 28,734 }

Total.... 57,815

Diseases.	M.	F.	Total.
Cholera	...	...	...
Small-pox	...	1	1
Fevers	2	2	4
Bowel-complaints	2	2	4
Suicide	...	...	...
Wounding	...	...	...
Accident	...	...	...
Snake-bite or killed by wild beasts.	...	...	...
All other causes	1	1	2
Total.....	5	6	11
Births during the week ...	7	10	17

J. HOUSTON, M. D.,
Surgeon to the Mysore Commn.

30*th August* 1880.

POSTAL NOTICE.

The 2nd September 1880.

It is hereby notified that the designation "Inspector of Post Offices" has been changed to "Superintendent of Post Offices."

The opportunity is taken of intimating that the following districts are comprised in the Coorg Division :—

Coorg, South Canara, Mysore and Hassan.

T. D. DINWIDDIE,
Supt. of Post Offices, Coorg Divn.

GOVERNMENT CINCHONA FEBRIFUGE.

This preparation is an efficient substitute for Quinine and can be purchased by Government officers, for public and charitable purposes, and by any one taking *twenty pounds* at a time, from the Superintendent, Botanical Garden, Calcutta, *for cash only*, at the following rates:—per four ounce tin *Rs.* 4, *ans.* 8 ; per eight ounce tin *Rs.* 8, *ans.* 8 ; per pound tin *Rs.* 16, *ans.* 8. The general public can be supplied by the Superintendent, Botanical Garden, *for cash only*, at the undernoted rates:—per four ounce tin *Rs.* 5, *ans.* 8; per eight ounce tin *Rs.* 10, *ans.* 8 ; per pound tin *Rs.* 20. This medicine is also sold by the principal European and Native druggists in Calcutta. Postage eight annas per 4 and 8 *oz.* tins and twelve annas per pound tin, in addition to the foregoing rates.

Mysore Government Press, Bangalore.—1880.

Middle School Examination, which will henceforth take the place of the General Test, will be held on the 1st December and four following days, at the following places :—

Burhampore,	Cumbum,	Palghat,	Trevandrum,
Chicacole,	Cuddapah,	Kumbakonam,	Cochin (Ernakulam),
Vizagapatam,	Bellary,	Nagapatam,	Calicut,
Vizianagrum,	Nellore,	Tranquebar,	Tellicherry,
Rajahmundry,	Chittúr,	Tanjore,	Mangalore,
Cocanada,	Vellore,	Trichinopoly,	Bangalore,
Ellore.	Madras,	Madura,	Ootacamund,
Masulipatam,	Cuddalore,	Ramnad,	Secunderabad,
Guntúr,	Salem,	Palamcottah,	Mysore and Shimoga.
Kurnool,	Coimbatore,	Nagercoil,	

2. Candidates must send in their applications on printed forms, which may be obtained from all Tahsildars and Treasury Deputy Collectors. The forms of application must reach the Collectors of the Districts in which Candidates desire to be examined on or before the 15th September next. Under no circumstances will applications received after that date be accepted.

Note.—For Trevandrum *and* Cochin *the applications should be sent to the* Resident of Travancore; *for* Bangalore, Mysore and Shimoga *to the* Director of Public Instruction, Bangalore, *and for* Secunderabad, *to the* Executive Commissariat Officer, Secunderabad.

3. The fee will be Rs. 3 in the case of pupils in schools, *i. e.*, those who are actually borne on the rolls of a school as pupils of the Upper Fourth Class or class of similar standard at the time of making the application for admission to the examination, and whose names have been on the rolls for a period of not less than three months preceding the date of application, and who certify to their intention to remain in the school until the end of the calendar year. In the case of all other persons, the fee will be Rs. 7. In both cases the fee should be paid into the Bank of Madras, or local Government Treasuries and the Treasury receipts forwarded with the applications to this Office through the Collector of the District. The fee will not be returned under any circumstances. A pupil in a school must forward a certificate from the Head Master of the school in which he or she is studying, in form appended to the application, and must also sign the declaration entered thereunder.

4. (*a*) Candidates who obtain a 2nd-Class Certificate at the Middle School Examination will be at liberty to appear again at a subsequent examination with the view of obtaining a 1st-Class Certificate.

(*b*) Candidates who obtain a 1st-Class Certificate but pass in one language only, will be permitted to appear at a subsequent examination in another language with the view of obtaining a *perfect* Certificate under Rule 22 of the Grant in-aid Code, as Fourth-grade Schoolmasters or 2nd Grade Schoolmistresses.

5. Matriculates who have hitherto had to pass the test in Writing and Spelling will, for the future, be examined in Writing *only* for employment in the Public Service, and the examination in this subject will be held at the same time as the Middle School Examination. Those who wish to be examined in December next will be supplied with a special form of application through the Collectors on payment of the usual fee of Rupees 2.

6. The examination for officials in the service of Government prior to 1st June 1867, for whom a modification of the examination was sanctioned by Government, as notified under date the 26th July 1876, will be held at the same time as the Middle School Examination. In this case candidates should apply to the undersigned direct on a special form which will be supplied on application to this Office. The fee for this test will, as heretofore, be Rs. 3, which should be remitted by a Money Order.

No candidate will be admitted to the above examinations at any other place than that named in his application, and no candidate will be allowed to name more than one place. To prevent mistakes candidates should submit their applications direct to the Collectors of the Districts in which the stations at which they desire to be examined are situated.

This Notification supersedes that issued on the 23rd instant.

By Order,

B. LOVERY,
Acting Secretary.

THE

MYSORE GAZETTE.

Published by Authority.

BANGALORE, SATURDAY, SEPTEMBER 11, 1880.

☞ Separate paging is given to this Part in order that it may be filed as a separate compilation.

PART II.

Notifications by the Judicial Commissioner, &c.

JUDICIAL DEPARTMENT.

NOTIFICATION.

The 2nd September 1880.

The undermentioned gentleman has been enrolled as an Advocate in the Court of the Judicial Commissioner of Mysore, under the Rules of 18th February 1879 :—

Mr. M. V. Krishna Rao.

J. D. SANDFORD,
Judicial Commissioner.

EDUCATIONAL DEPARTMENT.

NOTIFICATION.

The 30th August 1880.

MIDDLE SCHOOL EXAMINATION.

The following Notifications received from the Commissioner for the U. C. S. Examinations are published for general information. Printed forms of application may be obtained from the undersigned.

L. RICE,
Director of Public Instruction,
Mysore and Coorg.

The 31st August 1880.

Revised Notification.—In connection with the Notification of Government, dated the 31st ultimo, and published in the *Fort St. George Gazette*, under date the 10th instant, copy of which is republished along with this Notification for the information and guidance of candidates, it is hereby notified that the

The 31st July 1880.

An examination, styled the Middle School Examination, shall be held annually under the superintendence of the Commissioner for the Uncovenanted Civil Service Examinations at such stations as may be determined on from time to time, and shall be open to all male and female candidates. It shall commence on the 1st December, or if that day falls on a Sunday, on the 2nd December.

2. The fee in the case of pupils in schools shall be Rupees 3, and in the case of all other persons Rupees 7.

3. Candidates must send in their applications on printed forms, which may be obtained from all Tahsildars and Treasury Deputy Collectors. The forms of application must reach the Collectors of the districts in which the candidates desire to be examined on or before the 15th September. Under no circumstances will applications received after that date be accepted.

4. Candidates must pay to the officers, from whom they obtain the form of application, the prescribed fee, a receipt for which will be given separately, and also on the face of the form which is supplied to them. The fee must be paid in every case without exception, and will not be returned under any circumstances.

5. No candidate will be admitted to the examination at any other place than that named in his or her application. To prevent mistakes, candidates should submit their applications direct to the Collector of the district, in which the station at which they desire to be examined is situated.

6. Every male candidate must be examined in six, and in not more than six, and every female candidate in five, and not more than five of the following branches. All candidates must come up in Branches C and D and in Branches A or B. The choice of the remaining branches is left to the candidates :—

A. ENGLISH (120 MARKS).

(*a*) Handwriting.—Copying rapidly and in a good clear hand a manuscript or lithographed paper (20 marks).

(*b*) Orthography.—Writing from dictation a passage from a book equal in difficulty to the Supplement to the Fourth Book (20 marks).

(*c*) Translating into the vernacular one or more passages from a book, not previously studied, equal in difficulty to Chambers' Moral Class Book (30 marks); or if the candidate knows no vernacular, Paraphrasing one or more passages of poetry, not previously studied, equal in difficulty to Selections in Poetry No. 1 (30 marks).

(*d*) Translating a vernacular letter or easy narrative into English (30 marks),
or, if the candidate knows no vernacular,
Writing a letter on a given subject (30 marks).

(*e*) Grammar as contained in Dr. R. Morris English Grammar (Macmillan's Primer Series), and Sullivan's Attempt to simplify English Grammar, pages 1 to 120, or any similar books (20 marks).

B. SECOND LANGUAGE (120 MARKS).

(1) *Tamil, Telugu, Malayalam, Canarese, Uriya, Hindustani, and Persian.*

(*a*) Handwriting.—Copying rapidly and in a good clear hand a manuscript or lithographed paper (20 marks).

(*b*) Orthography.—Writing from dictation (20 marks).

(*c*) Composition, such as a description of a place, an account of some useful, natural, or artificial product, or the like (30 marks).

(*d*) Grammar as contained in the Grammars used in the third, lower fourth, and upper fourth classes of a Government School or any others of equal difficulty (20 marks).

(*e*) Text Book.—The following or such books as may from time to time be prescribed for Government Schools (30 marks) :—

Tamil.—Poetical Anthology, No. II.
Telugu.—Nala Charitram.
Malayalam.—Panchatantram, Part II.
Kanarese,—Poetical Anthology published by the Basel Mission Press.
Uriya.—Ramayana Sundra Kanda.
Hindustani.—Urdu Poetical Reader, Majmuah Sakhun, Part II, pages 1 to 30.
Persian. Gulistan (expurgated edition), Books II and III.

(*II*) *Latin.*

(*a*) Grammar, as contained in the Public School Latin Primer or any similar book, to the end of Syntax (60 marks).

(*b*) Text-book.—Cæsar De Bello Gallico, Book I, Chapters 1 to 29, or such book as may from time to time be prescribed (30 marks).

(*c*) Translating easy sentences into Latin (30 marks).

(*III*) *Sanskrit.*

(*a*) Handwriting.—Copying in a good clear hand a passage printed in the Devanagari character (20 marks).

(*b*) Orthography.—Writing from dictation in the Devanagari character (20 marks).

(*c*) Grammar.—The letters, Guna, Vriddhi, Visarga, &c. Declension of regular nouns. Conjugation of verbs of the 1st, 4th, 6th, and 10th classes in the Present Indicative (commonly called Present *Laṭ*), Present Potential or Optative (commonly called Potential or Optative *vidhi liṅ*), Present Imperative (commonly called Imperative *Lóṭ*) and Imperfect Indicative (commonly called Imperfect *Laṅ*) (40 marks).

(*d*) Text-book.—Hitopadesa. Mitralabha from the commencement up to the 30th sloka inclusive, or such book as may from time to time be prescribed (20 marks).

(*e*) Translating easy sentences into Sanskrit (20 marks).

C. ARITHMETIC (80 MARKS).

The first four simple and compound rules, reduction, vulgar and decimal fractions, simple and compound proportion.

(English figures must be used, and the candidate must be acquainted with the principal Indian weights and measures.)

D. GEOGRAPHY AND INDIAN HISTORY (100 MARKS).

(*a*) The Geography of Asia and Europe as contained in Clyde's Elementary Geography or any similar book (25 marks).

(*b*) The Geography of India as contained in Duncan's Geography of India, pages 1 to 106, or any similar book (25 marks).

(*c*) The History of India to the Battle of Jubbulpore in 1817 (50 marks).

E. MATHEMATICS (60 MARKS).

(*a*) Euclid, Book I (35 marks).

(*b*) Algebra to the end of fractions (25 marks).

F. PHYSICAL GEOGRAPHY (60 MARKS).

Geikie's Physical Geography (Macmillan's Science Primer), or any similar book.

301

G. PHYSIOLOGY OR HYGIENE (60 MARKS).

(a) Foster's Physiology (Science Primer), or any similar book, or
(b) Dr. Cunningham's Sanitary Primer, First Lessons in Health by J. Berners, Personal Care of Health by Dr. Parker, Dr. Dhanakoti Raju's Elements of Hygiene, or any similar book.

H. POLITICAL ECONOMY (60 MARKS).

Archbishop Whately's Easy Lessons on Money Matters, or any similar book.

I. AGRICULTURE (60 MARKS).

Robertson's Agricultural Class Book or any similar book.

J. ENGLISH HISTORY (60 MARKS).

The History of England to the Accession of Henry IV.

7. The Examination will be conducted in the order of time and subjects shewn below :—

Days.	Hours.	Subjects.
First	10 — 1	Geography and Indian History.
Do	2 — 4 ...	Arithmetic.
Do	4 — 4½ ...	English Handwriting.
Second	10 —12½ ...	Translation, &c. and English Grammar.
Do	12½— 1 ...	English Dictation.
Do	2 — 4 ...	Mathematics.
Do	4 — 4½ ...	Handwriting in Second Language.
Third	10 —12½ ...	Second Language. Composition, Grammar and Text Book.
Do	12½— 1 ...	Second Language. Dictation.
Do	2 — 4 ...	English History.
Fourth	10 —12 ..	Physical Geography.
Do	2 — 4 ...	Physiology or Hygiene.
Fifth	10 —12 ...	Political Economy.
Do	2 — 4 ...	Agriculture.

8. Marks will be deducted for bad writing and spelling in every subject. In non-language subjects, however, the deductions for spelling will not exceed 10 per cent of the maximum and for writing 5 per cent of the maximum number of marks for each branch.

9. Candidates who bring up English must answer the non-language papers in English. Candidates who do not bring up English may answer them in the Vernacular.

10. The candidates will be ranked in the order of proficiency, as determined by the total number of marks obtained by each, and will be arranged in two classes.

11. Candidates who bring up English will be ranked in the first class, provided they obtain not less than—

(a) Sixty per cent of the maximum marks in English handwriting.

(b) One-half of the maximum marks in Branch C, Arithmetic.

(c) One-third of the maximum marks in Branch A, English.

(d) One-fourth of the Maximum marks in every other branch in which the candidate has been examined.

(e) One-half of the aggregate number of marks.

12. They will be ranked in the second class, provided they obtain not less than—

(a) One-third of the maximum marks in English handwriting.

(b) One-fourth of the maximum marks in Branches A, English, and C, Arithmetic.

(c) One-third of the aggregate number of marks.

13. Candidates who do not bring up English will be ranked in the first class, provided they obtain not less than—

(a) Sixty per cent of the maximum marks for handwriting in the language selected by them.

(b) One-half of the maximum marks in Branch C, Arithmetic.

(c) One-third of the maximum marks in Branch B, Vernacular.

(d) One-fourth of the maximum marks in every other branch in which the candidate has been examined.

(e) One-half of the aggregate number of marks.

14. They will be ranked in the second class, provided they obtain not less than—

(a) One-third of the maximum marks for handwriting in the language selected.

(b) One-fourth of the maximum marks in Branches B, Alternative Language, and C, Arithmetic.

(c) One-third of the aggregate number of marks.

15. Certificates will be issued by the Commissioner to the passed candidates, specifying the subjects in which they have been examined and the class in which they have been placed.

16. A first-class certificate will render the holder eligible, on attaining the age of eighteen, to appointments under Government of the value of Rs. 20 and upwards, provided that any such appointment requires a knowledge of only the language or languages in which the candidate has passed; and shall suffice for admission to the Special Tests.

17. It is to be distinctly understood that the Government do not undertake to provide appointments for all persons who may pass the prescribed examinations under these rules. Appointments will, as before, be regulated by the requirements of the public service, and will be made by the same authorities as heretofore. It is likewise to be understood that it will still, as before, be open to Government, and, with their sanction, to the Controlling Courts and Boards, whenever they see necessary to prescribe the period of service which must be passed in one grade of appointment before promotion to a higher grade altogether irrespective of these rules.

18. In the Educational Department a first-class certificate will be accepted as equivalent to the general education test for fourth-grade school-masters and second-grade schoolmistresses. In the case, however, of candidates who have passed only in one language, the certificate will be held only equivalent to the general education test required for an imperfect certificate. The holder of a first-class certificate whether perfect or imperfect, will still be required in the case of males to pass the departmental examination in method and teaching a class, and in the case of females, in method, needlework, and teaching a class.

19. A first or second-class certificate will qualify any person for admission as a pupil into the upper department of a High School, provided that no person shall be admitted into an English High School unless he or she has passed the examination in English.

20. This Notification supersedes all previous Notifications on the subject.

(By order of His Grace the Governor in Council.)

R. DAVIDSON,
Chief Secretary.

303

BANGALORE MUNICIPALITY.

No. 2019. *The 6th September* 1880.

Memo of propositions to be laid before the Ordinary Meeting of the Cantonment Municipal Commission, to be held at their Office Premises, No. 12, Residency Road, on Tuesday the 21st September 1880, at 7½ A. M.

1. The usual monthly accounts for the month of August 1880.

2. Remission and exemption of house-tax.

3. List of agreements entered into by the President during the month of August 1880.

4. List of estimates sanctioned by the President during the month of August 1880.

5. Proceedings of the Chief Commissioner of Mysore, No. 2969-70—Ml. 139, dated 16th August 1880, sanctioning the retention of the detective establishment at a monthly cost of Rs. 48 and the abolition of a separate mohatarfa tax on houses in the Cantonment.

6. Proceedings of the Chief Commissioner of Mysore, No. 3028-9—Ml. 145, dated 19th August 1880, declining sanction to the proposed removal of the aloe hedge along the line of Railway within Municipal limits.

7. Tenders for lighting the Cantonment of Bangalore for the next 3 years commencing from the 1st of January 1881.

No. 7. *The 3rd September* 1880.

Proceedings of an Ordinary Meeting of the Cantonment Municipal Commission held at their Office Premises No. 12, Residency Road, on Tuesday the 24th August 1880, at 7½ A. M.

President.

Dr. J. H. Orr, C. B.—*Present.*

Ex-Officio Members.

Absent.—The Asstt. Quarter-Master Genl., M. Dn.
The Dy. Surgeon Genl., H. M.'s British Forces.
The Executive Engr., Bangalore Dn.
The District Superintendent of Police.
The District Engineer.
The Town and Cantt. 2nd Magistrate.

Municipal Commissioners of Divisions.

No. 1, *Alsur Division.*

Present.—V. Sadasiva Modaliar, Esq.
R. P. Campbell, Esq.

No. 2, *Shule Division.*

Present.—Standish Lee, Esq.
Absent.—V. Vasudeva Modaliar, Esq.

No. 3, *Richmond Town and Fort Division.*

Present.—Captain P. Curley.
Absent.—Abdul Husen Saib, Esq.

No. 4, *General Bazar Division.*

Present.—Abdul Khudus Khadri Khaji Saib, Esq.
A. R. Sabhapati Modaliar, Esq.
Mahomed Saliha Saheb, Esq.

No. 5, *Blackpalli Division.*

Present.—T. T. Leonard, Esq.
Absent.—B. Ramalingam, Esq.

No. 6, *High Ground Division.*

Present.—G. G. Brown, Esq.
Major-General C. G. Ottley.

Statement of Accounts.

1. The Progress Report, Account Current, Statement of Cash Balance and Assessor's Accounts for July 1880, together with the Mortuary Report for the same period, are submitted and after examination are adopted :—

Receipts.	Amount.		
I. Octroi.... Class 1. Articles of food or drink for men or animals or duty on dry and green cocoanuts ...	434	15	11
„ 2. Animals for slaughter	...	...	...
„ 3. Fuel, lighting and washing	...	...	...
„ 4. Building materials	52	7	0
„ 5. Drugs, spices and gums	...	...	...
„ 6. Tobacco and betel-leaves	3,151	2	5
„ 7. Cloth	...	...	...
„ 8. Metals	...	...	...
II. Tax on houses, buildings or lands	5,637	12	3
III. Tax on professions and trades or collections of liquor license fees...	3,979	13	4
IV. Tax on carriages, horses, &c.	...	...	...
V. Tolls on carts, carriages, &c.	...	...	...
VI. Special taxes under Section II, Act VI of 1868—Conservancy ...	...	...	...
VII. Rents ... 1. Nazul lands	34	10	0
2. Do shops	451	6	9
3. Serais	...	...	...
4. Confiscated lands	...	...	...
5. Compound or site tax	...	...	...
VIII. Gardens	...	...	...
IX. Extra-ordinary. 1. Sale of houses and lands	...	...	...
2. Loans	...	...	...
3. Refunds and recoveries	5	5	2
4. Interest on securities and loans	...	...	...
5. Other Items	...	...	...
X. Fines	45	0	0
XI. Pounds	84	11	6
XII. Miscellaneous	598	12	6
XIII. Transfers and Contributions—Received from the Executive Engineer, Bangalore Division, on account of grant-in-aid for repairing suburban roads	924	12	10
Received from Assistant Engineer, Madras D. P. W., Bangalore, on account of grant-in-aid by the Madras Government for the conservancy of main sewer	1,200	0	0
Total Rupees.....	16,600	13	8
To Cash Balance brought forward from last month's accounts.....	10,075	8	0
Total Rupees.....	26,676	5	8

Expenditure.	Amount.		
I. Collections... 1. For Octroi tax	489	2	2
2. „ Tax on houses, buildings and lands ...	416	8	0
3. „ Tax on professions and trades ...	10	0	0
4. „ Tax on carriages, horses, &c. ...	..	...	...
5. „ Tolls on carts and other vehicles ...	...	...	...
6. Special taxes	...	...	...
7. Rents assigned to Municipality ...	108	0	0
II. Head Office Charges	708	10	6
III. Public Works. 1. Supervision	483	0	0
2. *a.* Original Works	1,564	5	8
b. Purchase of land	6	2	0
c. Compensation for houses, &c. ...	...	...	...
3. Repairs	2,713	4	3
IV. Police	1,923	15	10
V. Education	...	...	...
VI. Charitable Grants. 1. Dispensary and Medical Charges ...	...	...	...
2. Vaccination	20	0	0
3. Asylums	...	...	...
VII. Conservancy	1,644	2	9
VIII. Road watering	121	7	0
IX. Lighting	642	12	11
X. Gardens ... 1. Public Gardens ...	...	...	..
2. Nursery	7	0	0
3. Farms	...	...	...
XI. Extraordinary... 1. Museums and Institutes ...	...	...	...
2. Purchase of Government Notes ...	...	...	...
3. Fairs and Exhibitions	...	..	...
XII. Miscellaneous ... 1. Repayment of loans	...	...	...
2. Refund of excess collections ...	...	...	...
3. Cattle Pound charges	74	6	0
4. Statistics and mortuary registration ...	90	0	0
5. Other miscellaneous items ...	252	4	0
XIII. Reserve	...	...	...
Total Rupees.....	11,275	1	1
To Cash Balance carried to next month's accounts.....	15,401	4	7
Total Rupees.....	26,676	5	8

Resolution.—Passed.

305

Mortuary Register, Bangalore.

2. Statement of Births and Deaths within Cantonment Municipal limits during the month of July 1880.

Causes of Deaths.	Europeans.		East Indians.		Musalmáns.		Hindus.		Native Christians.		Other Classes.		Buddhists.		Total.		Total in—		Difference.	
	M.	F.	M.	F.	M.	F.	M.	F.	M.	F.	M.	F.	M.	F.	M.	F.	July 1880.	June 1880.	Increase.	Decrease.
Cholera ...	...	...	...	...	...	...	...	...	...	...	...	...	...	...	...	...	...	...	...	...
Small-pox ...	...	...	...	...	...	...	...	...	...	...	...	...	...	...	...	...	...	...	...	...
Fevers... ...	...	...	2	...	2	1	5	11	1	1	...	...	...	...	10	13	23	35	...	12
Bowel-complaints ...	...	...	...	1	4	...	3	8	3	1	...	...	...	...	10	10	20	21	...	1
Suicide ...	...	...	...	...	...	...	...	...	...	...	...	...	...	...	...	...	...	...	...	...
Wounding ...	...	...	...	...	...	...	...	...	...	...	...	...	...	...	...	...	...	...	...	...
Accidents ...	...	...	...	...	...	...	...	1	...	1	...	...	...	...	...	2	2	2	...	...
Snake-bite or killed by wild beasts.	...	...	...	...	...	...	...	...	...	...	...	...	...	...	...	...	...	...	...	...
Other Causes—																				
Convulsion ...	...	...	...	...	7	1	6	4	2	1	...	...	...	...	15	6	21	...	...	...
Anasarca ...	...	...	...	...	...	...	...	...	1	...	...	...	...	...	1	...	1	...	...	...
Debility ...	...	...	...	...	...	1	...	2	1	...	...	...	...	...	1	3	4	...	...	...
Dropsy ...	...	...	...	...	...	...	...	1	...	...	...	...	...	...	...	1	1	...	...	...
Cough ...	...	...	...	...	...	1	2	1	...	...	...	...	...	...	2	2	4	...	...	...
Diabetes ...	...	...	...	...	...	...	...	2	...	...	...	...	...	...	...	2	2	...	...	...
Consumption ...	...	...	...	...	1	...	2	4	1	...	...	...	...	...	4	4	8	...	...	...
Lock-jaw ...	...	...	...	...	2	1	2	1	...	...	...	...	...	...	4	2	6	...	...	...
Fits ...	...	...	...	...	...	...	...	1	...	1	...	...	...	...	...	2	2	...	...	...
Jaundice ...	...	...	...	...	...	...	...	...	1	...	...	...	...	...	1	...	1	...	...	...
Croup ...	1	...	1	...	...	...	...	...	...	...	...	...	...	...	2	...	2	...	...	...
Still-born ...	...	...	...	...	1	...	...	2	...	...	...	...	...	...	1	2	3	...	...	...
Disease of Brain and Paralysis.	1	1	...	...	...	...	1	...	1	...	...	...	...	...	3	1	4	...	...	...
Hooping cough ...	...	...	...	...	...	...	1	...	...	...	...	...	...	...	1	...	1	...	...	...
Obstruction of bowels ...	...	...	...	...	1	...	...	...	...	...	...	...	...	...	1	...	1	...	...	...
Hernia ...	...	...	...	...	1	...	...	...	...	...	...	...	...	...	1	...	1	...	...	...
Phthisis ...	...	...	...	...	...	...	1	...	1	...	...	...	...	...	2	...	2	...	...	...
Apoplexy ...	...	...	...	...	...	...	1	...	...	...	...	...	...	...	1	...	1	...	...	...
Albumineria ...	...	...	...	...	...	...	1	...	...	...	...	...	...	...	1	...	1	...	...	...
Rheumatism ...	...	...	...	...	...	...	...	...	...	1	...	...	...	...	...	1	1	...	...	...
Palsy ...	...	...	...	...	...	...	1	...	...	...	...	...	...	...	1	...	1	...	...	...
Erysipelas ...	...	...	...	...	...	...	...	...	1	...	...	...	...	...	1	...	1	...	...	...
Total Other Causes.....	2	1	1	...	13	4	18	18	9	3	...	...	...	...	43	26	69	84	...	15
Total Deaths.....	2	1	3	1	19	5	26	38	13	6	...	...	...	...	63	51	114	142	...	28
Total Births during the month...	4	6	6	2	13	13	58	55	13	10	...	...	...	...	94	86	180	229	...	49

Abstract of Mortuary Report and Percentage of Births and Deaths on the estimated Population, 78,176.

Classes.	Births.		Difference.		Percentage of Births.		Deaths.		Difference.		Percentage of Deaths.	
	June 1880.	July 1880.	Increase.	Decrease.	June 1880.	July 1880.	June 1880.	July 1880.	Increase.	Decrease.	June 1880.	July 1880.
Europeans ...	13	10	...	3	·31	·24	2	3	1	...	·03	·07
East Indians ...	6	8	2	...	·22	·32	2	4	2	...	·09	·16
Musalmáns	39	26	...	13	·25	·17	19	24	5	...	·12	·15
Hindus ...	153	113	...	40	·31	·22	99	64	...	35	·20	·12
Native Christians	18	23	5	...	·24	·31	20	19	...	1	·02	·25
Buddhists ...	...	...	...	...	...	...	...	...	...	...	...	...
Other Classes ...	...	...	...	...	...	...	...	...	...	...	...	...
Total.....	229	180	7	56	·23	·23	142	114	8	36	·18	·14

REMARKS.

There were 114 deaths during the month; 23 from fevers, 20 from bowel-complaints, 2 from accidents and 69 from other causes as detailed in the previous page.

The number of deaths in July 1880 as compared with those in June 1880 and the corresponding month of last year were as follows :—

Of Europeans 3 against 2, Eurasians 4 against 2, Musalmáns 24 against 19, Hindus 64 against 99, and Native Christians 19 against 20, being 28 less than previous month, and 31 below the total number of deaths registered in the corresponding month of last year.

Ages.

Classes.	No. died during the month.	Under 1 year.	1 to 6 years.	6 to 12 do.	12 to 20 do.	21 to 30 do.	31 to 40 do.	41 to 50 do.	51 to 60 do.	Above 60 do.	Total.
Europeans ...	3	1	...	...	...	...	...	...	...	2	3
East Indians ...	4	1	1	...	...	..	...	1	...	1	4
Musalmáns ...	24	12	2	...	..	3	3	1	2	1	24
Hindus ...	64	30	6	1	3	11	6	2	1	4	64
Native Christians.	19	4	5	1	1	...	3	3	1	1	19
Buddhists ...	...	...	...	...	...	...	...	...	...	...	..
Other Classes ...	...	...	...	...	...	...	...	...	...	...	...
Total.....	114	48	14	2	4	14	12	7	4	9	114

Resolution.—Approved.

List of Agreements entered into by the President.

3. List of agreements entered into by the President during the month of July 1880 :—

No.	Subject.
1	Agreement executed by Gadi Munisami Chetti for the lease of 3 Shroff Stalls at the Cantonment New Market.
2	Do by Gáre Nanjanna for the removal of rubbish in Blackpalli Division.
3	Do by Pillanna do do in High Ground Division.
4	Do by Chaudri Mahomed Husen for the lease of Bandy-stand contract.
5	Do by Khazi Husen Sheriff Saib for the collection of fees on contract on open Stalls in the Cantonment Market.
6	Do by Kadappa for constructing a tunnel in Cleveland Town.
7	Do by Jogiyappa for supplying bullocks with drivers to the Conservancy carts of Alsur Division.
8	Do by do do do of Shule Division.
9	Do by do do do of Arab Lines Division.
10	Do by Ragavarow Naidu for the removal of rubbish in General Bazar Division.
11	Do by Kadappa for constructing V Section drains in the Cantonment of Bangalore.

Resolution.—Approved.

List of Estimates sanctioned by the President.

4. List of estimates sanctioned by the President during the month of July 1880.

No.	Name of work.	Amount sanctioned.		
26	Estimate for constructing Box drain across Shule Chauk Road A lane, Blackpalli. ...	36	0	0
27	Estimate for repairing the Cantonment Tobacco Koti	61	0	0
30	Estimate for stone revetment to the north bank of nullah running between Mr. Thompson's Compound and Old Post Office Reservoir.	110	0	0
		207	0	0

Resolution.—Approved.

Proposed Bye-law for the storage of kerosine-oil.

5. Deferred Proceedings relating to the storage of kerosine-oil.

Resolved.—That application be made to Chief Commissioner for permission to introduce into Section 185 of the Regulations, a clause regulating the storage of kerosine-oil, &c., as obtains in the Madras Municipal Act of 1878.

Grant of a gratuity to Overseer Mahomed Husen.

6. Read—Letter No. 2094, dated 30th July 1880, from the Deputy Accountant General of Mysore, relating to the grant of a gratuity to late Overseer Mahomed Husen.

Resolved.—That the Chief Commissioner be informed that on the breaking up of the Sar Amin's establishment two peons were thrown out of employ: one of them by name Mahomed Jaffar has been appointed to the situation of Daffedar, referred to in Chief Commissioner's Proceedings No. 2094, dated 30th July 1880, and as there is no suitable employment in the Municipality for Overseer Mahomed Husen, the Commissioners resolved at their meeting on the 20th July, so that they should be permitted to grant him a gratuity: it is now further resolved that their recommendation to the above effect be once more submitted for the favorable consideration of the Chief Commissioner.

Transfer of Mayo Memorial Hall to the Municipality.

7. Read—Letter No. 3164—G. 820, dated 30th July 1880, from the Secretary to the Chief Commissioner of Mysore, General Department, relating to the Mayo Memorial Hall.

Resolution.—To be recorded.

Application by S. Lee, Esq., for two plots of ground at Yellegaudanpalyam.

8. Read—Letter dated 6th August 1880, from S. Lee, Esq., relating to the purchase of two plots of ground at Yellegaudanpalyam.

Resolved.—That the plot marked A on Mr. Lee's plan be in the first instance offered to Miss Pedroza, the owner of the adjoining premises at 1 anna per square yard, and in the event of her declining to take over the plot, that it together with plot marked B be given at the above mentioned rate to Mr. Lee.

Proposed Arrangements for taking the next Census.

9. Read—Proposed arrangements for taking the next Census in 1880—81.

Resolution.—The proposed arrangements are approved of and it is resolved that as soon as the numbering of the houses are completed, a Register in Form C of the owners and their occupation should

be prepared and furnished as directed in Chief Commissioner's Proceedings and order thereon No. 1376—Ml. 228, dated 11th June 1880.

S. Lee, Esqr.'s proposal relating to the lighting contract.

10. Standish Lee, Esq., Municipal Commissioner, No. II Division, states that he will move for a Committee to enquire into the working of the lighting contract.

Resolution.—That a Committee composed as under be appointed for the purpose of reporting on the working of the lighting contract and that permission be asked to allot a sum of Rs. 150 to the Committee for the purpose of defraying any necessary expenses that may be incurred in carrying out their enquiries :—

S. Lee, Esq.	A. R. Sabhapati Modaliar, Esq.
R. P. Campbell, Esq.	Mahomed Saliha, Esq.
Captain P. Curley.	T. T. Leonard, Esq.

License Fee on Pottery Kilns.

11. Read—Sub-Committee's report relating to the Pottery kilns.

Resolved.—That the recommendation of the Committee to reduce the fee paid on kilns from Rs. 5 to Rs. 4 annually is approved as a temporary measure and for a period of one year only; and that the sanction of the Chief Commissioner be obtained for the alteration in the scale of fees sanctioned in the Proceedings of Chief Commissioner No. 3104—Ml. 153, dated 17th September 1879.

J. H. ORR,
President, Cantonment Munl. Commn.

NUNDYDROOG DIVISION.

NOTIFICATION.

The 10th September 1880.

Sessions for the Bangalore District will be held at Bangalore on Monday the 20th day of September 1880, and the following days.

The cases mentioned below are posted for trial :—

Magisterial No.	Sessions No.	Names of Prisoners.	Names of the Committing Magistrates.	Sections charged under—	Date of Committal.
39 of 1880.	29	Putbasappa	Mr. N. Krishna Rao, 1st Class Magistrate, Closepet Sub-Division.	498, 380 and 328, I. P. C.	18th August 1880.
181 of 1880.	30	Hirachand	Captain Maltby, Town and Cantonment Magistrate.	417 and 468, I. P. C.	26th do
42 of 1880.	31	Junan ... ... Periyatambi ... ... Jany ... ... Anthony	Mr. N. Krishna Rao, 1st Class Magistrate, Closepet Sub-Division.	392 and 394, I. P. C.	4th do

The Magistrates above named are hereby directed to cause all parties connected with the above noted cases to be in attendance at Bangalore before the Sessions Court on Monday the 20th day of September 1880, at 11 A. M.

All cases committed prior to that date will be taken up for trial in addition to the above.

T. R. A. THUMBOO CHETTY,
Sessions Judge.

309

BANGALORE DISTRICT.

NOTIFICATION.

The 2nd September 1880.

It is hereby notified that the undermentioned immovable properties of proclaimed offender D. Sétu Rao, late Khazana Bakshi of the Chief Commissioner's Treasury, will be resold by public auction at the respective premises at 1 o'clock in the afternoon of the 23rd September 1880.

Terms of sale.

Purchasers should, as soon as the sale is concluded, deposit 25 per cent of the purchase money, and pay up the balance within 15 days from the date of sale. In case of default of payment as aforesaid, the property will be sold again at the risk of the defaulting purchaser, who will be held responsible for any loss that may be incurred in consequence of such default.

Properties.

1. House situated at Siddikatte of Bangalore, measuring 113 × 42 feet.
2. Two rooms and a cow-shed in front of the said house, as also the right, title and interest of D. Sétu Rao in a well and a mantapa, all continuously situated, measuring 96 × 36 feet.
3. A coach godown adjoining house No. 4 and measuring 27 × 10 feet with the right, title and interest of D. Sétu Rao therein.
4. House situated at Siddikatte of Bangalore, now in the occupation of D. Sétu Rao's son-in-law Rama Rao, (right, title and interest of D. Sétu Rao).

L. RICKETTS,
District Magistrate.

HASSAN DISTRICT.

NOTIFICATION.

The 6th September 1880.

Mr. R. A. Anderson having applied for a duplicate of the Coffee Patta No. 15 granted by the Chief Commissioner of Mysore on the 29th September 1860 in his name for his coffee estate, 300 acres in extent, attached to the village of Báge in the Bále Hobli of the Manjarabad Taluk of the Hassan District, on the ground that the original has been accidentally destroyed, it is hereby notified to those concerned that all parties having any objection to the grant of a duplicate copy of the patta to the said Mr. R. A. Anderson, are required to communicate the same in writing to the Deputy Commissioner of the Hassan District before the 15th October next.

W. HILL,
Dy. Commissioner.

Visitors to the Mysore Government Museum, Bangalore, during the month of August 1880, *were* 26,880 *in number, averaging, exclusive of Sundays,* 1,034 *daily.*

SIGNATURES MADE IN—								Total of Signatures.		Unable to sign but tally kept.	Total of Visitors.	Unable to sign No. of—		Total of Visitors.
English.														
Europeans.	Natives.	Tamil.	Telugu.	Kanarese.	Hindustani.	Mahratta.	Sindi.	Males.	Females.			Men and Boys.	Women and Girls.	
225	499	503	141	1,421	232	115	5	3,024	117	23,739	26,880	11,957	11,782	26,880

J. HOUSTON, M. D.,
Supt., Mysore Govt. Museum.

Deaths registered in the Town and Cantonment of Bangalore for the Week ending 13*th August* 1880.

Estimated Population. { Males .. 72,236
Females .. 70,277

Total.... 142,513

Diseases.	M.	F.	Total.
Cholera	...	...	...
Small-pox	...	...	...
Fevers	8	3	11
Bowel-complaints	2	2	4
Suicide	1	...	...
Wounding	...	..	...
Accident	...	1	1
Snake-bite or killed by wild beasts.	...	...	...
All other causes	10	12	22
Total.....	21	18	39
Births during the week ...	28	33	61

Deaths registered in the Town of Mysore for the Week ending 13*th August* 1880.

Estimated Population. { Males .. 29,081
Females .. 28,734

Total.... 57,815

Diseases.	M.	F.	Total.
Cholera	...	...	...
Small-pox	...	...	...
Fevers	5	8	13
Bowel-complaints	2	3	5
Suicide	...	...	...
Wounding	...	...	...
Accident	...	...	...
Snake-bite or killed by wild beasts.	...	...	...
All other causes	...	...	...
Total.....	7	11	18
Births during the week ...	12	7	1[illegible]

30*th August* 1880.

J. HOUSTON, M. D.,
Surgeon to the Mysore Commn.

GOVERNMENT CINCHONA FEBRIFUGE.

This preparation is an efficient substitute for Quinine and can be purchased by Government officers, for public and charitable purposes, and by any one taking *twenty pounds* at a time, from the Superintendent, Botanical Garden, Calcutta, *for cash only*, at the following rates:—per four ounce tin *Rs.* 4, *ans.* 8; per eight ounce tin *Rs.* 8, *ans.* 8; per pound tin *Rs.* 16, *ans.* 8. The general public can be supplied by the Superintendent, Botanical Garden, *for cash only*, at the undernoted rates:—per four ounce tin *Rs.* 5, *ans.* 8; per eight ounce tin *Rs.* 10, *ans.* 8; per pound tin *Rs.* 20. This medicine is also sold by the principal European and Native druggists in Calcutta. Postage eight annas per 4 and 8 *oz.* tins and twelve annas per pound tin, in addition to the foregoing rates.

THE

MYSORE GAZETTE.

Published by Authority.

BANGALORE, SATURDAY, SEPTEMBER 18, 1880.

☞ Separate paging is given to this Part in order that it may be filed as a separate compilation.

PART II.

Notifications by the Judicial Commissioner, &c.

JUDICIAL DEPARTMENT.

NOTIFICATIONS.

The 13th September 1880.

The undermentioned persons have been enrolled as 2nd Grade Pleaders in the Courts of Mysore, under the Rules of 18th February 1879 :—

187. Nonavanakere Durgam Venkatachar .. Proposing to practise in the Courts of the Nundydroog Division.

188. Hussur Annaji Rao Do do

The 13th September 1880.

The undermentioned persons have been enrolled as 2nd Grade Pleaders in the Courts of Mysore under the Rules of 18th February 1879 :—

189. Turuvekere T. Siddannaiya.
190. Kolar Madhu Rao.
191. Kote Subramanya Shastri.

} Proposing to practise in the Courts of the Nundydroog Division.

J. D. SANDFORD,
Judicial Commissioner.

INAM DEPARTMENT.

NOTIFICATION.

No. 6. *The 3rd September* 1880.

Inamdars are hereby informed that 15 *ad-interim* certificates for whole villages and 629 *ad-interim* extracts for minor inams, situated in the marginally noted taluks, were forwarded to the Deputy Commissioners of the Bangalore, Kolar, Mysore and Hassan Districts on the 3rd September 1880, for distribution. They are accordingly to appear to receive the same, on receipt of individual notices from the Amildars of the aforesaid taluks, who are hereby instructed to issue such notices without delay.

Closepet.	Nagamangala.
Mulbagal.	Haranhalli.
Mandya.	Hassan.
Arkalgúd.	Attikuppa.
Belur.	

R. A. COLE,
Supt. of Inam Settlements.

ANCHE DEPARTMENT.

NOTIFICATION.

No. 615—412. *The* 13*th September* 1880.

The following Postal Notice, issued by the Director General of the Post Office of India, is published for general information.

B. MURRY GUNGIAH,
Anche Bakshi.

Postal Notice.

An exchange of Money Orders between India and Ceylon has been arranged with effect from the 1st October 1880.

(1) * The value of a Money Order may not exceed Rs. 150 and may not include the fraction of an anna.
(2) The same remitter will not be allowed to obtain in one day Money Orders for a sum exceeding Rs. 600 in the aggregate drawn on the same office or payable to the same person.
(3) The commission charged on the issue of Money Orders will be as follows :—

On sums not exceeding Rs. 10	As. 2.
On sums exceeding Rs. 10 but not exceeding Rs. 25	„ 4.
For every additional Rs. 25 or fraction thereof, up to the limit of Rs. 150 ...	„ 4.

2. The conditions* applicable to Indian Inland Money Orders will apply also to Ceylon Money Orders.

3. But the remitter, instead of getting an acknowledgment signed by the payee, as in the case of Inland Money Orders, will get one signed by the Postmaster, Madras.

BANGALORE MUNICIPALITY.

The 15*th September* 1880.

Memo of propositions to be laid before the next meeting of the Town Municipal Commission, to be held at their Office Premises, Bangalore Taluk Cutcherry, on Friday the 24th September 1880 at 7½ A. M.

1. The usual monthly accounts and mortuary return for the month of August 1880.

2. Proceedings of the Chief Commissioner of Mysore, No. 3067—P. 328, dated 23rd August 1880, and order thereon, regarding the separation of house-tax from trade-tax.

3. Application from Mr. Shama Rao Amildar applying for the site situated immediately to the south of Chik Pettah karanji, dated 10th September 1880.

4. Application from Puttanna Chetti applying for a piece of site adjoining his Chatram, situated near Balé Bagal, together with Mr. B. Murry Gungiah's report thereon, dated 6th September 1880.

5. The consideration of tenders received for the lighting of the Town.

J. H. ORR,
President, Town Ml. Commn.

BANGALORE DISTRICT.

NOTIFICATION.

The 2*nd September* 1880.

It is hereby notified that the undermentioned immovable properties of proclaimed offender D. Sétu Rao, late Khazana Bakshi of the Chief Commissioner's Treasury, will be resold by public auction at the respective premises at 1 o'clock in the afternoon of the 23rd September 1880.

Terms of sale.

Purchasers should, as soon as the sale is concluded, deposit 25 per cent of the purchase money, and pay up the balance within 15 days from the date of sale. In case of default of payment as aforesaid, the property will be sold again at the risk of the defaulting purchaser, who will be held responsible for any loss that may be incurred in consequence of such default.

Properties.

1. House situated at Siddikatte of Bangalore, measuring 113 × 42 feet.

2. Two rooms and a cow-shed in front of the said house, as also the right, title and interest of D. Sétu Rao in a well and a mantapa, all continuously situated, measuring 96 × 36 feet.

3. A coach godown adjoining house No. 4 and measuring 27 × 10 feet with the right, title and interest of D. Sétu Rao therein.

4. House situated at Siddikatte of Bangalore, now in the occupation of D. Sétu Rao's son-in-law Rama Rao, (right, title and interest of D. Sétu Rao).

L. RICKETTS,
District Magistrate.

HASSAN DISTRICT.

NOTIFICATION.

The 6th September 1880.

Mr. R. A. Anderson having applied for a duplicate of the Coffee Patta No. 15 granted by the Chief Commissioner of Mysore on the 29th September 1860 in his name for his coffee estate, 300 acres in extent, attached to the village of Báge in the Bále Hobli of the Manjarabad Taluk of the Hassan District, on the ground that the original has been accidentally destroyed, it is hereby notified to those concerned that all parties having any objection to the grant of a duplicate copy of the patta to the said Mr. R. A. Anderson, are required to communicate the same in writing to the Deputy Commissioner of the Hassan District before the 15th October next.

W. HILL,
Dy. Commissioner.

KADUR DISTRICT.

NOTIFICATION.

The 9th September 1880.

Wanted for the Chikmagalur Municipality, an Overseer, salary Rs. 25 per mensem. None need apply who is not thoroughly acquainted with surveying and levelling and has not a fair knowledge of English.

Application with copies of testimonials should be made so as to reach this Office before the 1st November 1880.

S. VENKAT VARDAIENGAR,
Offg. Dy. Commissioner.

SEASON REPORTS FOR THE MONTH OF AUGUST 1880.

Bangalore District.

Rain-fall.—The rain-fall was abundant throughout the District during the month, and the quantity gauged at head-quarters was 8 inches, 90 cents.

Crops.—The crops are reported to be everywhere in a flourishing condition. The seeds sown during the month, were kartik paddy, horse-gram, sáve, hutchellu, ragi and avare.

Health.—The public health has been generally good.

Mortality.—There were 1,077 deaths during the month of July against 1,077 in the preceding month.

Cattle.—Murrain continued to prevail though to a slighter extent in all the taluks of the District, and the number of deaths from this source was 878 against 1,433 in the preceding month. The number of deaths from all causes amounted to 4,314, of these 146 were caused by wild beasts.

Lands.—Lands assessed at Rs. 2,128—13—10 were taken up for cultivation, and those assessed at Rs. 4—12—0 were resigned.

L. RICKETTS,
Dy. Commissioner.

Túmkúr District.

Rain.—Rain fell throughout the District during the month under report as follows:—

		I.	C.			I.	C.
Túmkúr	..	3	20	Sira	..	1	40½
Koratagere	..	2	40	Kunigal	..	5	90
Maddagiri	..	0	77	Kadaba	..	2	60
Chiknayakanhalli	..	0	80	Honnavalli	..	3	0
				Total..		20	7½

Weather.—Generally cloudy.

Crops.—Green and black grams are being harvested in Chiknayakanhalli and Honnavalli Taluks, while ragi, dál, ballar, sáme, harka, gram, sesamum seed, punaji paddy and castor-oil seed sown throughout the District.

Public Health.—Good. The total number of deaths reported from all causes in July was 687 against 608 in June.

Cattle.—Loss among cattle was 2,147 against 2,339. Dod roga is still prevalent throughout the District, except in Maddagiri and Chiknayakanhalli Taluks.

Lands.—Paying an assessment of Rs. 2,623—6—2 were taken up for cultivation, while there were no relinquishments.

Prices.—Rice, ragi, dál, ballar, horse-gram, wheat, ghee and jaggory were sold at 13 seers, 15 chittaks, 32 S. 1. C., 16 S. 4 C., 30 S. 9 C., 35 S. 2 C., 8 S. 10 C., 1 S. 11 C., and 6 10 respectively per rupee.

E. CHITAMBRAM IYER,
Offg. Dy. Commr.

Shimoga District.

Rain-fall.—The rain-fall in the several taluks of the District during the month was as follows :—

	Inches.	Cents.		I.	C.
Shimoga	3	69	Sorab	4	61¼
Channagiri	6	40	Ságar	6	77
Honnali	2	21½	Nagar	18	53
Shikarpur	2	24	Kavaledurga ..	13	95

The average readings of the thermometer at Shimoga were 76·09 at 9-30 A. M. and 77·74 at 3-30 P. M.

Lands.—Lands assessed at Rs. 983—2—0 were taken up for cultivation against lands assessed at Rs. 411—12—0 given up.

Health.—Better since last report.

Cattle.—Suffer from murrain and mouth and foot disease in some taluks.

Prices.—Easy.

V. N. NARSIMMAIENGAR,
Dy. Commissioner.

Chitaldroog District.

Weather.—The weather was close. Rain fell more or less in all parts of the District. The quantity gauged at the head-quarters of the taluks was as follows :—

	I.	C.		I.	C.
Chitaldroog	2	40	Hiriyur	2	22
Davangere	2	60	Budihal	1	0
Kankuppa	0	30	Hosdurga	0	42½
Dodéri	1	77	Pavagada	4	30

During the month under reference, 48 large and 359 small tanks received a supply of water varying in quantity to last from 1 to 7 months.

The average reading of the thermometer at the District Head-quarters was 72·38 at 9-30 A. M., and 76·08 at 3-30 P. M. The general direction of the wind was south-west.

Crops.—The seeds sown during the month under report were javari, gingelly, black and green grams, paddy, cotton, ragi, castor-oil, sajje, ballar, togari, sáve, navane, korasani and paddy. The crops harvested in the Taluks of Budihal and Davangere were black and green grams, paddy and gingelly. The crops are reported to be healthy in all parts except in the Chitaldroog Taluk.

Lands.—Lands paying an assessment of Rs. 2,296—12—0 were newly taken up for cultivation, while lands paying an assessment of Rs. 14 were resumed.

Cattle.—Cattle suffered from hoof and mouth diseases, the total number of heads lost from these and various other diseases were 1,059.

Health.—The health of the population was generally good except in parts of the Hiriyur Taluk, where intermittent fever prevailed.

Prices.—The markets were fairly supplied with food grains. The average prices were :—

Per rupee.	Per rupee.	Per rupee.
Rice 12 to 13 seers.	Ragi 36 to 40 seers.	Javari 42 seers.

ABDUL KHADER, K. B.,
Dy. Commr.

Deaths registered in the Town and Cantonment of Bangalore for the Week ending 20th August 1880.

Estimated Population. { Males ... 72,236 / Females ... 70,277 } Total ... 142,513

Diseases.	M.	F.	Total.
Cholera ...	...	...	...
Small-pox ...	...	...	...
Fevers ...	5	9	14
Bowel-complaints ...	1	2	3
Suicide ...	...	...	...
Wounding ...	...	...	...
Accident ...	2	2	4
Snake-bite or killed by wild beasts.	...	...	...
All other causes ...	12	18	30
Total ...	20	31	51
Births during the week ...	29	46	75

Deaths registered in the Town of Mysore for the Week ending 20th August 1880.

Estimated Population. { Males ... 29,081 / Females ... 28,734 } Total ... 57,815

Diseases.	M.	F.	Total.
Cholera ...	...	...	...
Small-pox ...	...	...	...
Fevers ...	11	4	15
Bowel-complaints ...	4	4	8
Suicide ...	...	...	...
Wounding ...	...	...	...
Accident ...	...	...	...
Snake-bite or killed by wild beasts.	...	...	...
All other causes ...	1	...	1
Total ...	16	8	24
Births during the week ...	7	6	13

15th *September* 1880.

J. HOUSTON, M. D.,
Surgeon to the Mysore Commn.

Abstract of Meteorological Reports received from Head-Quarters of Districts in the Province of Mysore, from 16th to 31st August 1880.

DISTRICT.	Thermometer. Averages for the haf month. 9-30 A. M. Dry bulb.	Wet bulb.	Differ-ence.	3-30 P. M. Dry bulb.	Wet bulb.	Differ-ence.	Thermometer. Maximum.	Minimum.	Rain. Inches.	Cents.	Wind.
Kólar* ...	...	...	...	...	...	...	...	...	...	...	...
Túmkúr	76	65	11	87	76	11	88	63	...	83	N. N. E. & S. W.
Mysore* ...	...	...	..	...	...	...	...	...	...	...	...
Hassan ...	63	33	30	70	36	34	79	60	1	77	W.
Shimoga	75	...	...	85	...	...	...	...	2	61	S. W.
Kadur	73	65	...	73	65	...	73	61	1	1	S. W.
Chitaldroog	73	...	...	77	...	...	...	...	...	84	S. W. & S. S. W.

*Information not received.

JUST PUBLISHED.

Super-royal octavo, cloth.

Tribes of the Hindoo Koosh. *Price Rs.* 6 ; *packing and postage*, 6 *annas.*

Office of Superintendent of Government Printing, 8, Hastings street, Calcutta.

THE

MYSORE GAZETTE.

Published by Authority.

BANGALORE, SATURDAY, SEPTEMBER 25, 1880.

☞ Separate paging is given to this Part in order that it may be filed as a separate compilation.

PART II.

Notifications by the Judicial Commissioner, &c.

JUDICIAL DEPARTMENT.

IN THE COURT OF THE JUDICIAL COMMISSIONER OF MYSORE AND COORG.

Civil Side.

Rule of Practice No. 32, *dated* 22*nd September* 1880.

The Judicial Commissioner directs that the following paragraphs be added to the Rules for the guidance of the Courts in the exercise of their duties under Section 287 of the Code of Civil Procedure contained in the Rule of Practice No. 28, dated 8th March 1880 :—

2 *A*. The rules contained in Chapter XIV of the Code of Civil Procedure as to the summoning and attendance of witnesses, and in Chapter VI as to the service of summons shall apply to all persons summoned to give evidence or to produce documents and to service of summonses under these Rules.

2 *B*. Where the attendance of the attaching creditor or of the judgment-debtor cannot conveniently be procured, the Court may dispense with their attendance and may examine their Pleaders or any persons able to answer material questions relating to the attached property by whom the Pleaders may be accompanied.

J. D. SANDFORD,
Judicial Commissioner.

POLICE DEPARTMENT.

NOTIFICATION.

The 18*th September* 1880.

A reward of Rs. 500 is offered to any person not being the actual murderer for such information as may lead to the detection of the person or persons concerned in the murder of Balachand and Chandraban at Alsúr on the night of the 10th or the morning of the 11th September 1880.

By Order,

W. J. CUNINGHAM,
Secretary.

INAM DEPARTMENT.

NOTIFICATION.

No. 6. *The 3rd September* 1880.

Inamdars are hereby informed that 15 *ad-interim* certificates for whole villages and 629 *ad-interim* extracts for minor inams, situated in the marginally noted taluks, were forwarded to the Deputy Commissioners of the Bangalore, Kolar, Mysore and Hassan Districts on the 3rd September 1880, for distribution. They are accordingly to appear to receive the same, on receipt of individual notices from the Amildars of the aforesaid taluks, who are hereby instructed to issue such notices without delay.

Closepet.	Nagamangala.
Mulbagal.	Haranhalli.
Mandya.	Hassan.
Arkalgúd.	Attikuppa.
Belur.	

R. A. COLE,
Supt. of Inam Settlements.

REGISTRATION DEPARTMENT.

REMUNERATION OF SUB-REGISTRARS' GUMASTAS.

Circular Memo No. 10 *of* 1880—81, *dated the* 15*th September* 1880.

With reference to this Office Circular No. 4, dated 7th September 1877, regarding the remuneration of the Gumastas of Sub-Registry Offices in Mysore, the Inspector General of Registration has the honor to notify with the Chief Commissioner's sanction a revised scale of allowances which will be payable from 1st proximo to their respective Gumastas by Amildars as Sub-Registrars of the undermentioned sub-districts out of the 40 per cent commission drawn by them. In all offices where the commission does not exceed 10 rupees per mensem the whole will continue to be paid to the Gumastas as heretofore :—

Districts.	Sub-Districts.	Sub-Registrar's average monthly commission of 40 per cent in 1879—80.	Present monthly allowance.	Revised allowance.
		Rs.	Rs.	Rs.
Bangalore ...	Anekal	12	Nil.	10
	Nelamangala	11	do	10
	Devanhalli	12	do	10
	Hoskote	12	do	10
Túmkúr	Túmkúr	13	10	10
	Honnavalli	14	10	10
	Sira	12	10	10
	Chiknayakanhalli ...	11	10	10
Kolar	Chikballapur	20	15	15
	Kolar	14	10	10
	Malur	11	Nil.	10
Mysore	Chamrajnagar	16	Nil.	10
	Nanjangúd	14	do	10
	Yelandúr	13	do	10
Hassan	Attikuppa	22	12	15
	Arkalgúd	20	12	15
Kadúr	Koppa	37	12	15
	Tarikere	17	10	12
Shimoga	Kavaledurga	38	15	20
	Shimoga	18	12	15
	Ságar	18	10	15

H. HUDSON,
Inspector General of Registration,
Mysore.

319

ANCHE DEPARTMENT.

NOTIFICATIONS.

No. 626—418. *The* 18*th September* 1880.

It is hereby notified for general information that, under the authority of the Chief Commissioner, the experimental Anche Office opened at Hedatale in the Nanjangúd Taluk will be transferred to Kaulandi in the same Taluk from 15th October 1880.

No. 633—422. *The* 20*th September* 1880.

The following Postal Notice, issued by the Director General of the Post Office of India, is published for general information.

B. MURRY GUNGIAH,
Anche Bakshi.

FOREIGN MONEY ORDERS.

On and after the 1st October 1880, the limit of Money Orders payable in Germany, Belgium, Luxembourg, Heligoland, the Netherlands, Switzerland, Denmark, and Italy will be raised from £10 to £20; and the rates of commission for Foreign Money Orders will be reduced as shewn in the following table:—

Rates of commission for Money Orders drawn upon the Foreign Countries mentioned above, *viz.*, Germany, Belgium, Luxembourg, Heligoland, the Netherlands, Switzerland, Denmark, and Italy;

	£	Rs.	A.
On sums not exceeding	2 ...	0	4
Exceeding £ 2 and not exceeding	5 ...	0	8
Do do 5 do	7 ...	0	12
Do do 7 do	10 ...	1	0
Do do 10 do	12 ...	1	4
Do do 12 do	15 ...	1	8
Do do 15 do	17 ...	1	12
Do do 17 do	20 ...	2	0

Rates of commission for Money Orders drawn upon the United Kingdom or Canada—

	£	Rs.	A.
On sums not exceeding	2 ...	0	8
Exceeding £ 2 and not exceeding	5 ...	1	0
Do do 5 do	7 ..	1	8
Do do 7 do	10 ...	2	0

NUNDYDROOG DIVISION.

NOTIFICATION.

The 23*rd September* 1880.

Sessions for the Túmkúr District will be held at Túmkúr on Wednesday the 6th day of October 1880, and the following days.

The cases mentioned below are posted for trial:—

Magisterial No.	Sessions No.	Names of Prisoners.	Name of the Committing Magistrate.	Sections charged under—	Date of Committal.
37 of 1880.	16	1. Muniya ... ... 2. Timma	Mr. A. Krishnasamaiengar, Munsiff and 2nd Class Magistrate, Túmkúr.	395	2nd September 1880.
39	17	Hutcha	Do.	457 and 75.	Do.
40	18	Muniya	Do.	454	Do.
42	19	Putta	Do.	411 and 75.	Do.
38	20	Subbanna	Do.	211	14th do

The Magistrate above named is hereby directed to cause all parties connected with the above noted cases to be in attendance at Túmkúr before the Sessions Court on Wednesday the 6th day of October 1880, at 11 A. M.

All cases committed prior to that date will be taken up for trial in addition to the above.

T. R. A. THUMBOO CHETTY,
Sessions Judge.

BANGALORE DISTRICT.

NOTIFICATION.

The 13th September 1880.

It is hereby notified for public information that 4 English pattern ploughs made up at the Experimental Farm, Bangalore, will be sold by public auction one by one to the highest bidder at 12 noon of the 11th October 1880 before the District Treasury Officer at the Deputy Commissioner's Office.

2. The purchaser will be required to at once deposit 25 per cent of the purchase money and to pay the balance into the District Treasury within 15 days from the sale; failing to do so, the money deposited will be forfeited to Government.

3. If the above conditions or any of them are not complied with, the ploughs will be sold again at the expense and risk of the first purchaser.

4. Persons wishing to bid for the ploughs may inspect them at the District Office any day after 11 A. M. on office days.

L. RICKETTS,
Dy. Commissioner.

HASSAN DISTRICT.

NOTIFICATION.

The 6th September 1880.

Mr. R. A. Anderson having applied for a duplicate of the Coffee Patta No. 15 granted by the Chief Commissioner of Mysore on the 29th September 1860 in his name for his coffee estate, 300 acres in extent, attached to the village of Báge in the Bále Hobli of the Manjarabad Taluk of the Hassan District, on the ground that the original has been accidentally destroyed, it is hereby notified to those concerned that all parties having any objection to the grant of a duplicate copy of the patta to the said Mr. R. A. Anderson, are required to communicate the same in writing to the Deputy Commissioner of the Hassan District before the 15th October next.

W. HILL,
Dy. Commissioner.

KADUR DISTRICT.

NOTIFICATION.

The 9th September 1880.

Wanted for the Chikmagalur Municipality, an Overseer, salary Rs. 25 per mensem. None need apply who is not thoroughly acquainted with surveying and levelling and has not a fair knowledge of English.

Application with copies of testimonials should be made so as to reach this Office before the 1st November 1880.

S. VENKAT VARDAIENGAR,
Offg. Dy. Commissioner.

COORG.

IN THE COURT OF THE SUPERINTENDENT OF COORG.

Application No. 58 *of* 1880.

William Bidie .. .. *Applicant.*

In the matter of the estate of the late Mr. Alexander Gray.

Whereas William Bidie, executor of the deceased above named, has applied to this Court for probate of the last will and testament of the said deceased who died in South Coorg on the 24th August 1880, and Wednesday the 20th day of October 1880 at 11 A. M. has been fixed for the hearing of the application.

All persons claiming to have any interest in the estate of the deceased are hereby called upon to come and see the proceedings, on or before the said 20th day of October 1880.

Given under my hand and the seal of the Court this 15th day of September 1880.

H. G. THOMSON,
Superintendent.

NOTICE.

The 22*nd September* 1880.

The undermentioned timber logs, the produce of Coorg Forests, will be sold by public auction on the 16th October 1880 at Húnsúr :—

Teak logs	230.	Other kinds	195.

F. B. DICKINSON,
Asstt. Conservator of Forests.

SEASON REPORTS FOR THE MONTH OF AUGUST 1880.

Kolar District.

Rain-fall.—The average rain-fall during the month was 3 inches and 56 cents.

Lands.—Lands assessed at Rs. 2,522—1—4 were taken up for cultivation, while none were relinquished during the month.

Seeds sown—Horse-gram, inferior sesamum, paddy and sáme.

Crops—Generally good.

Crops harvested—Sajje and superior sesamum.

Health—Good.

Casualties among Cattle.—	In July.	In August.
Cows and bulls	3,159	1,537
Buffaloes	724	427
Sheep and goats	2,072	1,379
Horses	9	7
Asses .	47	20
Total...	6,011	3,370

A. COOPOOSAWMY MODALIAR,
For Dy. Commr.

Mysore District.

Rain.—Good rain fell throughout the District ; the total registered being 48 inches 71 cents.

Crops.—Prospects good ; ragi, black, green and horse-gram and avare were sown, while cholam, and sesamum seeds were harvested.

Health.—Generally good.

Cattle.—Murrain very prevalent : 1,146 head of cattle are reported to have died therefrom, while 1,437 casualties are reported from all other causes : total loss 2,583 against 2,365 in last month.

Prices.—The prices of some grains fluctuated, but for the most part were stationary. Rice 1st and 2nd sort respectively 11 and 12 seers, ragi 32, horse-gram 30 seers the rupee.

C. J. PEARSE,
Dy. Commissioner.

Kadur District.

Rain-fall.—The following shews the rain-fall at the head-quarters of taluks and the surrounding coffee estates during the month :—

Taluks.	I.	C.	*Estates.*	I.	C.
Chikmagalur ..	2	72	Santaveri	9	55
Tarikere ..	2	98	Bâlur	9	12
Lakvalli.. ..	6	22	Alikan	12	50
Koppa	14	5	Nemar	23	39
Banavar..	0	79	Mailimane	7	41
Múdgere ..	9	40	Koldhitlu	18	30
Kadur of the Banavar Taluk	0	67½	Basgod	9	35
			Karehadlu	8	69

The rain-fall at Chikmagalur in this month was 2 inches and 72 cents against 5 inches and 30 cents in the previous month and 3 inches and 34 cents in August 1879.

Thermometer.—The average readings of the thermometer recorded in the meteorological register at the Civil Dispensary at Chikmagalur were as shewn below :—

	9—30 A. M.	3—30 P. M.		9—30 A. M.	3—30 P. M.
July 1880	70·74	69·64	August 1880	72·51	73·06

Seeds sown.—Ragi, avare, sáme, navane, horse-gram and cotton in the Tarikere Taluk ; paddy in the Lakvalli Taluk ; horse-gram, sugar-cane in the Chikmagalur Taluk, ragi, tobacco, oil-seeds bargu, and chillies in the Banavar Taluk. Paddy seedlings are being transplanted in the Koppa and Múdgere Taluks.

Condition of Crops.—Generally good, but the crops in parts of Ajjampur are stated to have suffered a little from excessive moisture. It is also stated that paddy was withering from want of rain in the Múdgere Taluk. About Banavar and Kadur much land was left unsown and the standing dry crops were withering in many parts. There has been, however, a decided change for the better in the current month.

Crops harvested.—Coriander, green-gram and yellu were partly harvested in the Tarikere Taluk, also cardamom in the Koppa Taluk, gid-ragi, wheat, garlic and onions in the Chikmagalur Taluk, sugar-cane, green and black-gram in the Banavar Taluk.

Coffee prospects.—Promising.

Health.—Intermittent fever prevailed to some extent in the Banavar Taluk and dysentery, ague and fever in the Koppa Taluk.

Live-stock.—Hoof and mouth disease prevailed in all the taluks, also murrain (Dod jadya) in the Múdgere, Lakvalli, Chikmagalur and Banavar Taluks and (Chappe roga) in the Chikmagalur, Banavar and Tarikere Taluks. The loss of cattle was 1,683 in this month against 957 in the previous one and 791 in August 1879.

Land.—Land assessed at Rs. 1,220—8—9 was newly taken up for cultivation.

Prices.—No change in the price of food-grains except as to ragi which rose from 24 to 28 seers per rupee at Chikmagalur.

T. RAGHAVENDRA RAO,
For Offg. Dy. Commissioner.

Coorg.

Wet land.—Transplanting for the Kartika crop completed, but the plants, especially in South Coorg, want more rain.

Ragi.—Generally thriving.

Cardamoms.—Picking will commence early and a good crop expected.

Coffee.—Prospects poor. Difficulty about labor continues, but it is hoped that some coolies from Mysore will come in after the "Gauri" and "Ganesa" festivals.

Mortality.—The number of deaths amongst the population of the Province in July was 429 against 344 in the same month of last year, and is classified as follows :—

			Taluks.	
Diarrhœa	..	26	Mercara ..	.. 37
Small-pox	..	3	Padinalknad ..	.. 109
Fever ..	..	384	Yedenalknad ..	.. 57
Suicide..	..	2	Kiggatnad ..	.. 85
Accidents	..	2	Nanjarajpatna ..	.. 58
Other diseases	..	12	Yelsavirshime ..	.. 54
			Towns.	
			Mahadeopet	.. 7
			Virarajendrapet ..	.. 22
	Total..	429	Total	.. 429

Of the above, there were 157 males, 122 females and 150 children, of the following sects :—

Christians 7 ; Coorgs 89 ; Hindus 257 ; Muhammadans 23 ; Other classes 53 ; Total 429.

Cattle.—The mortality amongst the cattle was 544 against 902 in the same month of last year, and is classified as follows :—

Bulls 148 ; cows 93 ; calves 106 ; he-buffaloes 52 ; she-buffaloes 67 ; calves 78 ; total 544.

Market-rates.—Slight fall in prices.

Rain-fall.—Mercara—

	Inches.	Cents.
In August 1880 ..	17	74
Total Rain-fall	108	28

Somavarpet—

In August 1880 ..	13	63
Total Rain-fall	82	67

H. G. THOMSON,
Superintendent.

JUST PUBLISHED.

Super-royal octavo, cloth.

Tribes of the Hindoo Koosh. *Price Rs. 6 ; packing and postage, 6 annas.*

Office of Superintendent of Government Printing, 8, Hastings Street, Calcutta.

GOVERNMENT CINCHONA FEBRIFUGE.

This preparation is an efficient substitute for Quinine and can be purchased by Government officers, for public and charitable purposes, and by any one taking *twenty pounds* at a time, from the Superintendent, Botanical Garden, Calcutta, *for cash only*, at the following rates:—per four ounce tin *Rs.* 4, *ans.* 8; per eight ounce tin *Rs.* 8, *ans.* 8; per pound tin *Rs.* 16, *ans.* 8. The general public can be supplied by the Superintendent, Botanical Garden, *for cash only*, at the undernoted rates:—per four ounce tin *Rs.* 5, *ans.* 8; per eight ounce tin *Rs.* 10, *ans.* 8; per pound tin *Rs.* 20. This medicine is also sold by the principal European and Native druggists in Calcutta. Postage eight annas per 4 and 8 *oz.* tins and twelve annas per pound tin, in addition to the foregoing rates.

THE

MYSORE GAZETTE.

Published by Authority.

BANGALORE, SATURDAY, OCTOBER 2, 1880.

☞ Separate paging is given to this Part in order that it may be filed as a separate compilation.

PART II.

Notifications by the Judicial Commissioner, &c.

JUDICIAL DEPARTMENT.

NOTIFICATIONS.

The 20th September 1880.

The undermentioned person has been enrolled as 2nd Grade Pleader in the Courts of Mysore, under the Rules of 18th February 1879 :—

192. Kadapa Srinivas Rao .. Proposing to practise in the Courts of the Ashtagram Division.

The 21st September 1880.

The undermentioned person has been enrolled as 2nd Grade Pleader in the Courts of Mysore, under the Rules of 18th February 1879 :—

193. Sillagattam Rama Rao .. Proposing to practise in the Courts of the Nundydroog Division.

The 24th September 1880.

The undermentioned person has been enrolled as 2nd Grade Pleader in the Courts of Mysore, under the Rules of 18th February 1879 :—

194. Kudavalli Puttaiya .. Proposing to practise in the Courts of the Nagar Division.

The 25th September 1880.

The undermentioned person has been enrolled as 2nd Grade Pleader in the Courts of Mysore, under the Rules of 18th February 1879 :—

195. Hassan T. S. Venkatachari .. Proposing to practise in the Courts of the Ashtagram Division.

The 27th September 1880.

The undermentioned person has been enrolled as 2nd Grade Pleader in the Courts of Mysore, under the Rules of 18th February 1879 :—

196. Turuvekere N. Guru Rao .. Proposing to practise in the Courts of the Nundydroog Division.

J. D. SANDFORD,
Judicial Commissioner.

REVENUE SURVEY AND SETTLEMENT DEPT.

NOTIFICATION.

No. 812. *The 28th September* 1880.

Mr. G. F. Meiklejohn, Assistant Superintendent, Mysore Revenue Survey, returned to duty from the one year's furlough to Europe granted him in Chief Commissioner's Notification No. 102 of the 3rd July 1879, on the 16th September 1880 afternoon.

W. C. ANDERSON,
Survey and Sett. Commr., Mysore.

INAM DEPARTMENT.

NOTIFICATION.

No. 6. *The 3rd September* 1880.

Inamdars are hereby informed that 15 *ad-interim* certificates for whole villages and 629 *ad-interim* extracts for minor inams, situated in the marginally noted taluks, were forwarded to the Deputy Commissioners of the Bangalore, Kolar, Mysore and Hassan Districts on the 3rd September 1880, for distribution. They are accordingly to appear to receive the same, on receipt of individual notices from the Amildars of the aforesaid taluks, who are hereby instructed to issue such notices without delay.

Closepet.	Nagamangala.
Mulbagal.	Haranhalli.
Mandya.	Hassan.
Arkalgud.	Attikuppa.
Belur.	

R. A. COLE,
Supt. of Inam Settlements.

BANGALORE MUNICIPALITY.

NOTIFICATION.

No. 334. *The 28th September* 1880.

The Public and the Weaver classes in particular are hereby informed that under the sanction conveyed in the Proceedings of the Chief Commissioner of Mysore, No. 2164—Ml. 92, dated 13th July 1880, the loom-tax shall in future be paid in 3 khists as follows :—

November	khist ;	6 annas in the rupee.	
January	do	6	do.
March	do	4	do.

The 27th September 1880.

Copy of Proceedings of the Town Municipal Commission at a meeting held on Saturday the 28th August 1880, at 7½ A. M.

President.

Dr. J. H. Orr, C. B., *Present.*

Ex-Officio Members.

Absent.—The Deputy Commissioner, Bangalore Dist.
The Executive Engineer, Nundydroog Divn.
The Commissary of Ordnance.
The Surgeon to the Mysore Commission.
The Amildar of Bangalore.

Municipal Commissioners.

1st Division, Balé Pettah.

Present.—Mr. A. S. Raghavachar.
Absent.— Mr. B. Murry Gungiah.

2nd Division, Manavarte Pettah.

Present.—Mr. A. Srinivasachar.
Absent.—Mr. Khazi Abed Jaffar Shaib.

3rd Division, Alsur Pettah.

Present.—Mr. P. Changalraya Modaliar.
Mr. S. V. Annaiyappa Chetti.

4th Division, Nagarta Pettah.

Present.—Mr. C. Doddi Venkatramana Chetti.
Absent.—Mr. B. Narayan Chetti.

5th Division, Kalasi Palyam.

Present.—Mr. C. Muttusami Naidu.
Mr. M. Ramasami Chetti.

I. The usual monthly accounts for July 1880 are laid before the Board, read and duly passed.

Ordered.—That the following cash account be submitted to the Deputy Accountant General in Mysore.

Cash Account Current of the Municipal Commission for the Town of Bangalore for the month of July 1880.

Receipts.	Amount.			Expenditure.	Amount.		
Cash Balance brought forward from last month's account	4,219	15	4	I. Collection. 1. For octroi tax ...	0	0	0
I. Octroi. 2. Animals for slaughter ..	10	8	0	I. Collection. 2. Mohatarfa tax on houses, buildings and lands, and for tax on professions and trades	157	12	6
I. Octroi. 4. Building materials ...	12	5	0	I. Collection. 7. Rents assigned to Municipality ...	20	0	0
I. Octroi. 6. Tobacco, betel-leaf and betel-nuts ...	1,575	9	3	II. Head Office charges ...	405	3	6
I. Octroi. 7. Tax on dry and green cocoanuts ...	217	8	0	III. Public Works. 1. Supervision ...	151	4	6
II. Mohatarfa tax on houses, buildings and lands	461	13	2	III. Public Works. 2. *a.* Original works ...	715	5	0
III. Mohatarfa tax on professions and trades	97	8	0	III. Public Works. 3. Repairs ...	541	15	10
VII. Rents.—2. Nazul shops ...	206	6	2	IV. Police	1,523	7	6
VII. Rents.—3. Refunds and recoveries ..	0	5	4	VI. Charitable grants	20	8	0
IX. Extraordinary.—5. Other Items. (Tobacco license) ..	18	0	0	VII. Conservancy	835	11	6
X. Fines	5	8	10	IX. Lighting	175	12	6
XI Pounds	24	5	0	X. Gardens	25	0	0
XII. Miscellaneous	242	15	2	XII. Miscellaneous 2. Refund of excess collections ...	0	9	0
XIII. Fees from liquor licenses ...	1,461	2	8	XII. Miscellaneous 3. Cattle Pound charges	10	8	0
				XII. Miscellaneous 4. Statistics and mortuary registration ...	32	5	0
				XII. Miscellaneous 5. Other miscellaneous items ...	144	11	5
				Total Rupees.....	4,760	2	3
				To Cash Balance carried to next month's accounts.....	3,793	11	8
Grand Total Rs.....	8,553	13	11	Grand Total Rs.....	8,553	13	11

Mortuary Register, Bangalore.

Statement of Births and Deaths within the Town Municipal limits during the month of July 1880.

Causes of Death.	Europeans.		East Indians.		Musalmáns.		Hindus.		Native Christians.		Buddhists.		Other Classes.		Total.		Total in—		Difference.	
	M.	F.	M.	F.	M.	F.	M.	F.	M.	F.	M.	F.	M.	F.	M.	F.	July 1880.	June 1880.	Increase.	Decrease.
Cholera ...	...	...	...	...	...	...	...	...	...	...	...	...	...	...	...	...	...	...	...	...
Small-pox ...	...	...	...	...	...	...	...	...	...	...	...	...	...	...	...	...	...	...	...	...
Fevers ...	...	...	...	...	8	5	17	17	...	...	...	...	...	...	25	22	47	52	...	5
Bowel-complaints ...	...	...	...	...	2	1	2	2	...	...	...	...	...	...	4	3	7	5	2	...
Injuries. Suicide ...	...	...	...	...	...	...	...	...	...	...	...	...	...	...	...	...	...	1	...	1
Injuries. Wounding ...	...	...	...	...	...	...	...	...	...	...	...	...	...	...	...	...	...	1	...	1
Injuries. Accident ...	...	...	...	...	...	...	...	...	...	...	...	...	...	...	...	...	...	2	...	2
Injuries. Snake-bite or killed by wild beasts. ...	...	...	...	...	...	...	...	...	...	...	...	...	...	...	...	...	...	...	...	...
Other Causes—																				
Consumption ...	...	...	...	...	...	...	3	5	...	...	...	...	...	...	3	5	8	10	...	2
Convulsion ...	...	...	...	...	...	...	2	1	...	...	...	...	...	...	2	1	3	7	...	4
Dropsy ...	...	...	...	...	...	...	1	...	...	...	...	...	...	...	1	...	1	1	...	...
Lock-jaw ...	...	...	...	...	...	...	1	...	...	...	...	...	...	...	1	...	1	3	...	2
Asthma ...	...	...	...	...	...	...	2	...	...	...	...	...	...	...	2	...	2	2	...	...
Rheumatism ...	...	...	...	...	...	...	2	...	...	...	...	...	...	...	2	...	2	...	2	...
Old-age ...	...	...	...	...	...	...	2	2	...	...	...	...	...	...	2	2	4	2	2	...
Croup ..	...	...	...	...	...	...	4	2	...	...	...	...	...	...	4	2	6	7	...	1
Total Other Causes.....	...	...	...	...	...	...	17	10	...	...	...	...	...	...	17	10	27	32	4	9
Total Deaths.....	...	...	...	...	10	6	36	29	...	...	...	...	...	...	46	35	81	93	6	18
Total Number of Births ...	...	...	...	...	7	9	42	30	...	...	...	...	...	...	49	39	88	107	...	19

Abstract of Mortuary Report and Percentage of Births and Deaths on the estimated Population, 58,573.

Classes.	Births.		Difference.		Percentage of Births.		Deaths.		Difference.		Percentage of Deaths.	
	June 1880.	July 1880.	Increase.	Decrease.	June 1880.	July 1880.	June 1880.	July 1880.	Increase.	Decrease.	June 1880.	July 1880.
Europeans ...	...	...	...	...	...	...	...	...	...	...	...	...
East Indians ...	...	...	...	...	...	...	...	...	...	...	...	...
Musalmáns ...	20	16	...	4	·308	·24	23	16	...	7	·35	·24
Hindus ...	87	72	...	15	·16	·14	68	65	...	3	·13	·12
Native Christians	...	...	...	...	...	...	2	...	...	2	·307	...
Buddhists ...	...	...	...	...	...	...	...	...	...	...	...	...
Other Classes ...	...	...	...	...	...	...	...	...	...	...	...	...
Total.....	107	88	...	19	·18	·15	93	81	...	12	·15	·14

REMARKS.

There were 81 deaths during the month; 47 from fever, 7 from bowel-complaints, 27 from other causes as detailed in the previous page.

The number of deaths in July 1880, as compared with that of June 1880, is as follows:—

Of Musalmáns 16 against 23, Hindus 65 against 68, Native Christians none against 2 being 12 less than the previous month and 42 below the total number of deaths registered during the corresponding month of last year.

Age.

Classes.	Number died during the month.	Born dead.	Under 1 year.	2 to 5 years.	6 to 12 do	12 to 20 inclusive.	21 to 30 do	31 to 40 do	41 to 50 do	51 to 60 do	Above 60.	Total.
Europeans ...	...	...	...	...	...	...	...	...	...	...	...	...
East Indians ...	...	...	...	...	...	...	...	...	...	...	...	...
Musalmáns ...	16	...	4	2	...	...	5	1	2	2	...	16
Hindus ...	65	...	11	6	2	6	10	9	8	5	8	65
Native Christians ...	...	...	...	...	...	...	...	...	...	...	...	...
Buddhists ...	...	...	...	...	...	...	...	...	...	...	...	...
Other Classes ...	...	...	...	...	...	...	...	...	...	...	...	...
Total.....	81	...	15	8	2	6	15	10	10	7	8	81

Resolution.—Approved.

II. Proceedings of the Chief Commissioner of Mysore, No. 2164—Ml. 92, dated 13th July 1880, regarding the collection of loom-tax.

Resolution.—To be recorded.

Deferred Proposition.

III. Proposed arrangements by the President for taking the Census of the Town as per Chief Commissioner's Proceedings No. 1376—Ml. 228, dated 11th June 1880.

Resolution.—The Commissioners unanimously approve of the proposed arrangements.

J. H. ORR,
President, Town Ml. Commn.

NUNDYDROOG DIVISION.

IN THE COURT OF DISTRICT JUDGE, NUNDYDROOG DIVISION AT BANGALORE.

Mis. Application No. 332 *of* 1880.

Sitaramaier of Kumbakonam, Tanjore District .. .. *Applicant.*

In the matter of the estate of C. Krishnaier of Kumbakonam, Tanjore District, deceased.

Whereas Sitaramaier, resident of Solayappa Modaliar Agraharam, Kumbakonam, Tanjore District, claiming to be the adopted son of the said C. Krishnaier deceased, has applied to this Court for a certificate under Act XXVII of 1860 to collect debts payable in respect of the shares invested by C. Krishnaier deceased resident of Kumbakonam, in the Bangalore Bank Limited.

Notice is hereby given of the said application and all claimants in the shares of the said C. Krishnaier of Kumbakonam, deceased, are invited to appear in this Court on Thursday the 4th day of November 1880, when the petition of the said Sitaramaier, applicant, will be heard, and the right to the certificate will be determined.

GIVEN under my hand and the seal of this Court this 28th day of September 1880.

T. R. A. THUMBOO CHETTY,
District Judge.

BANGALORE DISTRICT.

NOTIFICATION.

The 13th September 1880.

It is hereby notified for public information that 4 English pattern ploughs made up at the Experimental Farm, Bangalore, will be sold by public auction one by one to the highest bidder at 12 noon of the 11th October 1880 before the District Treasury Officer at the Deputy Commissioner's Office.

2. The purchaser will be required to at once deposit 25 per cent of the purchase money and to pay the balance into the District Treasury within 15 days from the sale; failing to do so, the money deposited will be forfeited to Government.

3. If the above conditions or any of them are not complied with, the ploughs will be sold again at the expense and risk of the first purchaser.

4. Persons wishing to bid for the ploughs may inspect them at the District Office any day after 11 A. M. on office days.

L. RICKETTS,
Dy. Commissioner.

TUMKUR DISTRICT.

NOTICE AS PER SECTION 354 OF THE CODE OF CIVIL PROCEDURE.

The 24th September 1880.

It is hereby declared that one Gare Kodi of Túmkúr is insolvent and as such entitled to the benefit of the provisions of the Chapter XX of the Code of Civil Procedure, and it is ordered that the said insolvent be and is hereby discharged from custody and from all liability to be arrested or imprisoned in respect of any of the debts mentioned in the schedule filed in Insolvent Case No. 9 of 1880 on the file of this Court.

A. KRISHNASAMAIENGAR,
Offg. Sub-Judge.

MYSORE DISTRICT.

NOTIFICATION.

The 24th September 1880.

S. Ramaswami Iyer, Acting Amildar and 3rd Class Magistrate of Gundlupet Taluk, is hereby invested, under Section 23, Criminal Procedure Code, with the following powers :—

1. Power to hold inquests (Section 135.)

2. Power to entertain complaints of offences in cases in which he has jurisdiction to try (Section 141).

C. J. PEARSE,
District Magistrate.

KADUR DISTRICT.

NOTIFICATION.

The 9th September 1880.

Wanted for the Chikmagalur Municipality, an Overseer, salary Rs. 25 per mensem. None need apply who is not thoroughly acquainted with surveying and levelling and has not a fair knowledge of English.

Application with copies of testimonials should be made so as to reach this Office before the 1st November 1880.

S. VENKAT VARDAIENGAR,
Offg. Dy. Commissioner.

COORG.

NOTICE.

The 22nd September 1880.

The undermentioned timber logs, the produce of Coorg Forests, will be sold by public auction on the 16th October 1880 at Húnsúr :—

Teak logs	230.	Other kinds	195.

F. B. DICKINSON,
Asstt. Conservator of Forests.

Deaths registered in the Town and Cantonment of Bangalore for the Week ending 27th August 1880.

Estimated Population. { Males .. 72,236; Females .. 70,277 } Total 142,513

Diseases.	M.	F.	Total.
Cholera	...	...	...
Small-pox	...	1	1
Fevers	7	6	13
Bowel-complaints	1	2	3
Suicide	...	...	...
Wounding	...	...	...
Accident	...	1	1
Snake-bite or killed by wild beasts.	...	...	...
All other causes	13	11	24
Total.....	21	21	42
Births during the week ...	23	38	61

Deaths registered in the Town of Mysore for the Week ending 27th August 1880.

Estimated Population. { Males .. 29,081; Females .. 28,734 } Total 57,815

Diseases.	M.	F.	Total.
Cholera	...	...	...
Small-pox	...	...	...
Fevers	4	6	10
Bowel-complaints	4	0	4
Suicide	...	...	...
Wounding	...	...	...
Accident	...	...	...
Snake-bite or killed by wild beasts.	...	...	...
All other causes	...	...	...
Total.....	8	6	14
Births during the week ...	8	5	13

Deaths registered in the Town and Cantonment of Bangalore for the Week ending 3rd September 1880.

Estimated Population. { Males .. 72,236 / Females .. 70,277 } Total .. 142,513

Diseases.	M.	F.	Total.
Cholera	...	...	...
Small-pox	...	...	...
Fevers	8	5	13
Bowel-complaints ...	3	1	4
Suicide	...	...	...
Wounding	...	...	...
Accident	...	...	...
Snake-bite or killed by wild beasts.	...	...	...
All other causes ...	7	16	23
Total.....	18	22	40
Births during the week ...	28	31	59

Deaths registered in the Town of Mysore for the Week ending 3rd September 1880.

Estimated Population. { Males .. 29,081 / Females .. 28,734 } Total .. 57,815

Diseases.	M.	F.	Total.
Cholera	...	...	...
Small-pox	..	..	...
Fevers	7	3	10
Bowel-complaints	4	2	6
Suicide	...	...	...
Wounding	...	...	...
Accident	1	...	1
Snake-bite or killed by wild beasts ...	...	...	...
All other causes	...	...	...
Total.....	12	5	17
Births during the week ...	6	9	15

28*th September* 1880.

J. HOUSTON, M. D.,
Surgeon to the Mysore Commn.

JUST PUBLISHED.

Super-royal octavo, cloth.

Tribes of the Hindoo Koosh. *Price Rs.* 6 ; *packing and postage*, 6 *annas.*

Office of Superintendent of Government Printing, 8, Hastings Street, Calcutta.

GOVERNMENT CINCHONA FEBRIFUGE.

This preparation is an efficient substitute for Quinine and can be purchased by Government officers, for public and charitable purposes, and by any one taking *twenty pounds* at a time, from the Superintendent, Botanical Garden, Calcutta, *for cash only*, at the following rates:—per four ounce tin *Rs.* 4, *ans.* 8 ; per eight ounce tin *Rs.* 8, *ans.* 8 ; per pound tin *Rs.* 16, *ans.* 8. The general public can be supplied by the Superintendent, Botanical Garden, *for cash only*, at the undernoted rates:—per four ounce tin *Rs.* 5, *ans.* 8; per eight ounce tin *Rs.* 10, *ans.* 8 ; per pound tin *Rs.* 20. This medicine is also sold by the principal European and Native druggists in Calcutta. Postage eight annas per 4 and 8 *oz.* tins and twelve annas per pound tin, in addition to the foregoing rates.

Mysore Government Press, Bangalore.—1880.

THE

MYSORE GAZETTE.

Published by Authority.

BANGALORE, SATURDAY, OCTOBER 9, 1880.

☞ Separate paging is given to this Part in order that it may be filed as a separate compilation.

PART II.

Notifications by the Judicial Commissioner, &c.

JUDICIAL DEPARTMENT.

NOTIFICATION.

The 1st October 1880.

The undermentioned persons have been enrolled as 2nd Grade Pleaders in the Courts of Mysore, under the Rules of 18th February 1879 :—

197. Kanakatte Bhanappa .. Proposing to practise in the Courts of the Nagar Division.

198. Hassan Venkatramanaiya .. Proposing to practise in the Courts of the Ashtagram Division.

J. D. SANDFORD,
Judicial Commissioner.

BANGALORE DISTRICT.

NOTIFICATION.

The 13th September 1880.

It is hereby notified for public information that 4 English pattern ploughs made up at the Experimental Farm, Bangalore, will be sold by public auction one by one to the highest bidder at 12 noon of the 11th October 1880 before the District Treasury Officer at the Deputy Commissioner's Office.

2. The purchaser will be required to at once deposit 25 per cent of the purchase money and to pay the balance into the District Treasury within 15 days from the sale ; failing to do so, the money deposited will be forfeited to Government.

3. If the above conditions or any of them are not complied with, the ploughs will be sold again at the expense and risk of the first purchaser.

4. Persons wishing to bid for the ploughs may inspect them at the District Office any day after 11 A. M. on office days.

L. RICKETTS,
Dy. Commissioner.

TUMKUR DISTRICT.

NOTICE AS PER SECTION 354 OF THE CODE OF CIVIL PROCEDURE.

The 24th September 1880.

It is hereby declared that one Gare Kodi of Túmkúr is insolvent and as such entitled to the benefit of the provisions of the Chapter XX of the Code of Civil Procedure, and it is ordered that the said insolvent be and is hereby discharged from custody and from all liability to be arrested or imprisoned in respect of any of the debts mentioned in the schedule filed in Insolvent Case No. 9 of 1880 on the file of this Court.

A. KRISHNASAMAIENGAR,
Offg. Sub-Judge.

MYSORE DISTRICT.

The 2nd October 1880.

Descriptive roll of a convict who escaped from a gang of prisoners working within the precincts of the Mysore Jail at about 6-30 A. M. on the 2nd October 1880.

Jail Register No.—8639. *Name and Father's Name*—Guruva *alias* Malla, son of Malla. *Place of Residence*—Sivarampet, Mysore. *Caste and Profession*—Gollar, domestic servant. *Age and Height*, 35 years, 5 feet 3¾ inches. *Crime and period of sentence*—Theft, 2 years' rigorous imprisonment from 9th August 1880. *Awarding Court*—Town Magistrate, Mysore, Case No. 269 of 1880. *Descriptive Marks*—Color brown, scars on either temple and just above eye-brows, a scar on inner part of right thigh about the lower third, two vaccination marks on either arm, either big toe turned outwards a little and a scar just below navel. Has a fetter gall on his right leg. A reward of rupees twenty-five will be given for the prisoner's re-capture.

T. J MCGANN,
Supt., Mysore Jail.

COORG.

NOTICE.

The 22nd September 1880.

The undermentioned timber logs, the produce of Coorg Forests, will be sold by public auction on the 16th October 1880 at Húnsúr :—

Teak logs	230.	Other kinds	195.

F. B. DICKINSON,
Asstt. Conservator of Forests.

The Proclamation of Sale.

IN THE COURT OF THE 1ST ASSISTANT SUPERINTENDENT OF COORG.

O. S. No. 83 *of* 1880.

Execution Case No. 50 *of* 1880.

Sakre Salappa, Christian, Merchant of Virarajendrapet .. Plaintiff.

Versus.

Christian Savara Doomail by his guardian Juan Doomail of Kuklur in Virarajendrapet, Defendant.

In execution of a decree of the above Court in the above case, dated the 18th May 1880, in virtue whereof a sum of Rs. 1,557—0—9 was adjudged to be payable by the said defendant unto the said plaintiff and of a warrant dated the 30th day of June 1880, for giving effect to the said decree by sale of property attached thereunder, notice is hereby given that on the 21st day of October 1880, at 2 P. M., Nazir of this Court will at Virarajendrapet, before the 1st Assistant Superintendent's Court, sell by auction to the highest bidder and without reserve the right, title and interest of the said defendant in the several articles of the immovable properties hereunder specified and every power of disposing of the same or any of them or of the profits arising therefrom which the said defendant may now consistently with the law exercise for his own benefit.

1	2	3	4	5	6	7	8	9
Lot No.	Situation of Property.	Description of lot including all particulars described in Amin's Report.	Survey No., Municipal No., or other fiscal designation.	Government Revenue including Local Cess, any other known fiscal charge resting on the lot and shewing any arrears due.	Present occupant, if known.	Mortgage or lien subject to which attachment has been continued and sale is to be made under Sections 282 and 295 of the Code of Civil Procedure.	List of rights, charges and claims to which the lot is supposed to be liable after inquiry under Section 287 of the Code of Civil Procedure and Rules made thereunder by the High Court.	List of claims to raise attachment rejected wholly or in part under Section 278 of the Code of Civil Procedure.
1	Kedamullur Village, Beppunad.	Sixty-five bhattis of land called "Kalameteva warga" No. 39, assessed at Rs. 6—8—0 and bounded on the east by boundary stone of Manateva wargada paddy field which is under the cultivation of one Christian Norunjee Appoo, west by Aramane kadanga, south by do north by boundary stone of newly cultivated paddy field (Hosagame) of Christian Paskokaress. This land is valued at Rs. 250 and it is under cultivation to be sold with the above warga to which it is attached.	Revenue Shist No. 39.	Rupees 6—8—0 being the assessment for the year 1879—80 paid and no balance is due.	Savara Doomail the Defendant.	Mortgage.	Nil.	Nil.
2		A coffee garden cultivated in the bâne land attached to the above Kalameteva warga free of assessment, and a cattle-shed thatched with straw, estimated area 20 bhattis, and bounded on the east by Aramane kadanga, west by a wild castor plant hedge, south by demarcation stones, north by Aramane kadanga, valued at Rs. 10 and the roof of the cattle-shed has tumbled down.						

1	2	3	4	5	6	7	8	9
Lot No.	Situation of Property.	Description of lot including all particulars described in Amin's Report.	Survey No., Municipal No., or other fiscal designation.	Government Revenue including Local Cess, any other known fiscal charge resting on the lot and shewing any arrears due.	Present occupant, if known.	Mortgage or lien subject to which attachment has been continued and sale is to be made under Sections 282 and 295 of the Code of Civil Procedure.	List of rights, charges and claims to which the lot is supposed to be liable after inquiry under Section 287 of the Code of Civil Procedure and Rules made thereunder by the High Court.	List of claims to raise attachment rejected wholly or in part under Section 278 of the Code of Civil Procedure.
3	Christian street at Virarajendrapet.	A thatched house and its backyard cultivated with coffee and bounded on the east by high road, west by old Taluk Cutcherry premises and kadanga, south by hedge of the above garden and foot path leading to the old Cutcherry, north by the old building site of Christian Lores Saldanchoo, and kalli hedge. 1. Valued at Rs. 70. 2. The house and garden are not in good condition. 3. There is a well at a distance of 15 fathoms from the house. 4. Virarajendrapet-Kuklur road passes by the house and the bazar is situated at a distance of ¼ mile. 5. The house has a plank ceiling and the walls are built of mud. 6. The roof is composed of bamboos and thatched with straw. 7. Having been neglected the roof is in a precarious state. 8. The house is 10 yards in length and 7 yards in breadth. 9. The annual income of the house is estimated at Rs. 25. 10. Not leased.	Municipal No. 95.	Mohatarfa tax Rs. 3—3—3 paid.	Savara Doomail the Defendant.	Mortgage.	Nil.	Nil.
4	Kuklur, Virarajendrapet.	Athatched house and coffee garden, 462 acres in extent and bounded on the east by Christian Doomgasojoo's coffee garden embankment and demarcation stones, south by the embankment of the above garden and demarcation stones, west by Christian Loosa or Peroosojoo's garden's embankment and demarcation stones, north by road to Nalknad and demarcation stones.						

1	2	3	4	5	6	7	8	9
Lot No.	Situation of Property.	Description of lot including all particulars described in Amin's Report.	Survey No, Municipal No., or other fiscal designation.	Government Revenue including Local Cess, any other known fiscal charge resting on the lot and shewing any arrears due.	Present occupant, if known.	Mortgage or lien subject to which the attachment has been continued and sale is to be made under Sections 282 and 295 of the Code of Civil Procedure.	List of rights, charges and claims to which the lot is supposed to be liable after inquiry under Section 287 of the Code of Civil Procedure and Rules made thereunder by the High Court.	List of claims to raise attachment rejected wholly or in part under Section 278 of the Code of Civil Procedure.
	Kuklur, Virarajendrapet.	1. The above house is valued at Rs. 60. 2. The above coffee garden is valued at Rs. 10. 3. The above garden is not under cultivation. 4. The house is in a ruinous state. 5. The properties are not incumbered or leased, no well attached. 6. The house is at a distance of a fathom from the public road. 7. The house is about a mile distant from the bazar. 8. The mud wall has come down. 9. The house has ceiling and roofed with bamboos and straw. 10. It is 12 yards in length and 7 yards in breadth. 11. The annual income is estimated at Rs. 35. 12. The properties are not rented.	Municipal No. 109.	Mohatarfa tax on house Rs. 1—2—0. Assessment on coffee garden Rs. 1—4—0.	Savara Doomail, the Defendant.	Mortgage.	Nil.	Nil.

— H. M. S. MAGRATH,
1st Asstt. Supt.

POSTAL NOTICE.

The 2nd October 1880.

The General Post Office will be removed temporarily to No. 13, Infantry Lines, from the 4th October 1880.

J. DIQUE,
Postmaster.

Visitors to the Mysore Government Museum, Bangalore, during the month of September 1880, *were* 32,764 *in number, averaging, exclusive of Sundays and holidays,* 1,311 *daily.*

Signatures made in—									Total of Signatures.		Unable to sign but tally kept.	Total of Visitors.	Unable to sign No. of—		Total of Visitors.
English.															
Europeans.	Natives.	Tamil.	Telugu.	Kanarese.	Hindustani.	Mahratta.	Marvadi.	Guzarati.	Males.	Females.			Men and Boys.	Women and Girls.	
269	523	546	170	1,666	277	69	1	10	3,383	148	29,233	32,764	14,536	14,647	32,764

J. HOUSTON, M. D.,
Supt., Mysore Govt. Museum.

Abstract of Meteorological Reports received from Head-Quarters of Districts in the Province of Mysore, from 1st *to* 15th *September* 1880.

District.	Thermometer. Averages for the haf month. 9-30 A. M. Dry bulb.	Wet bulb.	Difference.	3-30 P. M. Dry bulb.	Wet bulb.	Difference.	Thermometer. Maximum.	Minimum.	Rain. Inches.	Cents.	Wind.
Kolar	74	...	...	75	...	...	78	70	3	23	S. W.
Túmkúr ...	75	65	10	87	76	11	88	63	3	58	S. W. & N. E.
Mysore*... ...	...	...	...	...	...	...	...	...	...	...	...
Hassan	64	32	32	71	36	35	75	61	...	71	S. W. & W.
Shimoga ...	76	...	...	78	...	...	...	...	2	72	...
Kadur ...	72	65	...	72	65	...	77	60	1	21	N. E. & S. W.
Chitaldroog ...	73	...	...	76	...	...	...	...	2	34	S. W.

*Information not received.

At a Native District Court Martial held at Raipore on the 14th day of May 1880

No. 1187 Private Murrain, 16th Madras Native Infantry, was arraigned upon the following —

Charges.

1st Charge—Disgraceful conduct in having at Raipore, on or about the 20th April 1880, with intent to cause wrongful loss to Government of the compensation for dearness of rice granted only on family certificates to blood relations and connections by marriage, obtained a family certificate for a woman named Nagamma at Krishnagiri by falsely stating that she was his full sister.

2nd Charge—Conduct to the prejudice of good order and Military discipline in having at Raipore on or about the 1st December 1879, in direct disobedience of Para 645, Madras Army Regulations, borrowed, without express permission of his Wing Commander Rs. 15 from Private Munien of the same Regiment.

Finding.

The Court find that the prisoner No. 1187 Private Murrian, 16th Madras Native Infantry, is guilty of all the charges.

Sentence.

The Court sentence the prisoner No. 1187 Private Murrain, 16th M. N. I., to be dismissed the service.

Signed at Raipore this 14th day of May 1880.

W. G. SHARP, *Major, 16th M. N. I.,*
Superintending Officer.

Confirmed.

The prisoner to be dismissed the service with ignominy. I think the Court might fairly have awarded imprisonment in addition to dismissal considering prisoner's indifferent character and the two serious charges on which he was convicted.

KAMPTEE,
4th June 1880.

G. F. de BERRY, *Brigadier General,*
Cammanding Nagapore Force.

SALE OF TEAK TIMBER.

The 9th September 1880.

Notice is hereby given that tenders will be received by the undersigned up to 17th October 1880, for the purchase of teak logs lying in the Mudumallai and Benni Forests and Ootacamund Depôt.

2. The quantity in the forests is 37,200 cubic feet and in the Ooty Depôt 3,000 cubic feet (There are also 12,000 cubic feet of 'refuse' teak in the said forests open for offer).

3. No tender will be accepted for purchase of less than 10 logs in the Ooty Depôt and 25 logs in the forest.

4. The highest tender will be accepted and the successful competitor should pay the purchase money into the Nilgiri Commissioner's Treasury within a week after the date of acceptance of the tender. Failing which the logs will be re-sold at public auction at his risk.

5. All logs should be removed from the Depôt or Forest duly covered by pass-port (signed by the undersigned) which will be granted on completing payment of the purchase money.

6. The undersigned reserves to himself the right of rejecting any or all tenders without assigning reason for so doing and of withdrawing the sale at any stage before acceptance of the purchase money.

7. For further particulars apply personally to the undersigned who will be at the Chief Commissioner's house, Mysore, between the 10th and 15th October 1880.

R. S. JAGO, *Major,*
Dy. Conservator of Forests.

JUST PUBLISHED.

Super-royal octavo, cloth.

Tribes of the Hindoo Koosh. *Price Rs.* 6 ; *packing and postage,* 6 *annas.*

Office of Superintendent of Government Printing, 8, Hastings Street, Calcutta.

Select Extra-Tropical Plants readily eligible for industrial culture or naturalization, with indications of their native countries and some of their uses, by Baron Ferd. Von Mueller. Indian edition, 1880. *Price Rs.* 4 ; *Packing and postage* 6 *annas.*

Office of Superintendent of Government Printing, 8, Hastings Street, Calcutta.

GOVERNMENT CINCHONA FEBRIFUGE.

This preparation is an efficient substitute for Quinine and can be purchased by Government officers, for public and charitable purposes, and by any one taking *twenty pounds* at a time, from the Superintendent, Botanical Garden, Calcutta, *for cash only*, at the following rates :—per four ounce tin *Rs.* 4, *ans.* 8 ; per eight ounce tin *Rs.* 8, *ans.* 8 ; per pound tin *Rs.* 16, *ans.* 8. The general public can be supplied by the Superintendent, Botanical Garden, *for cash only*, at the undernoted rates :—per four ounce tin *Rs.* 5, *ans.* 8; per eight ounce tin *Rs.* 10, *ans.* 8 ; per pound tin *Rs.* 20. This medicine is also sold by the principal European and Native druggists in Calcutta. Postage eight annas per 4 and 8 oz. tins and twelve annas per pound tin, in addition to the foregoing rates.

THE

MYSORE GAZETTE.

Published by Authority.

BANGALORE, SATURDAY, OCTOBER 16, 1880.

341

☞ Separate paging is given to this Part in order that it may be filed as a separate compilation.

PART II.

Notifications by the Judicial Commissioner, &c.

JUDICIAL DEPARTMENT.

IN THE COURT OF THE JUDICIAL COMMISSIONER OF MYSORE AND COORG.

Civil Side.

Rule of Practice No. 33, *dated 5th October* 1880.

The Judicial Commissioner has framed and issued the following Rules, in continuation of the Rule of Practice No. 6, dated 25th July 1878, in regard to the Registers to be maintained in the Central Record Rooms :—

1. There shall be a separate Register for each District, or Subordinate Judge's jurisdiction, the cases being entered in the following order :—

Munsiffs' Courts.
Subordinate Judge's Court.
Deputy Commissioner's Court (late.)

2. The records of the District Judge's Court, including the late Commissioner's and Division Superintendent's Courts, shall also be entered in a separate register.

3. The following shall be the form of the Register :—

General Register of Records in the Central Record Room.

Division (District Judge's jurisdiction.)
District (Subordinate Judge's jurisdiction.)
Sub-Division (Munsiff's jurisdiction.)

These headings will be omitted in the Register of the District Judges' Court.

Year.	No. of Suit, Appeal or Case.	Names of Parties.		Remarks.
		Plaintiff, Appellant or Applicant.	Defendant, Respondent or opposing party.	
1	2	3	4	5

4. In the column of remarks shall be entered from time to time the number of the shelf in which each record is deposited.

5. There shall be a key or index on the first page of each register, indicating the following particulars for ready reference :—

Munsiff of — No. of Page.

- Original Suits
- Small Causes
- Execution Cases
- Miscellaneous Cases

Subordinate Judge of

- Original Suits
- Small Causes
- Execution Cases
- Miscellaneous Cases
- Appeals—
  - Regular
  - Miscellaneous

Deputy Commissioner

- Original
- Execution
- Miscellaneous Cases
- Appeals—
  - Regular
  - Miscellaneous

and a similar index to the Register of the District Judge's Court.

6. When records entered in the register are taken out and sent for reference, a note of the same shall be made in the register against the number of the suit in the column of remarks. When the record is received back, a note shewing the date of receipt shall be made immediately below or in continuation of the previous note.

NOTE.—Forms of Registers in loose sheets, to be hereafter bound up, will be supplied on indent on the Stationery Depôt.

NOTIFICATIONS.

The 7th October 1880.

The undermentioned person has been enrolled as a 2nd Grade Pleader in the Courts of Mysore, under the Rules of 18th February 1879 :—

199. Saklespur Narayan Shastri .. Proposing to practise in the Courts of the Ashtagram Division.

The 9th October 1880.

The undermentioned persons have been enrolled as 2nd Grade Pleaders in the Courts of Mysore, under the Rules of 18th February 1879 :—

200. Bukkapatnada Sivaramaiya, Proposing to practise in the Courts of the Nundydroog Division.

201. Honnavalli Subbanna. Do do

J. D. SANDFORD,
Judicial Commissioner.

FINANCIAL DEPARTMENT.

VOUCHER FOR PAYMENTS ON CHEQUES TO PUBLIC WORKS DEPARTMENT.

Circular No. 1480, *dated 7th October* 1880.

The Deputy Accountant General has the honor to draw the attention of District Treasury Officers to Chapter 21, Civil Account Code, Rule 9 A, in Comptroller General's Circular of Code, corrections to 31st August 1880 (forwarded by Anche.) It is requested that in accordance therewith the cheques of the Public Works Department paid in each month beginning with October 1880 may be returned to the Public Works Officer who drew them on his furnishing the Treasury Officer with a consolidated receipt for the total amount paid in the month, which total should be entered in the list of payments and vouched by the receipt.

H. HUDSON,
Dy. Acctt. General in Mysore.

REGISTRATION DEPARTMENT.

To—The Registering Officers in Mysore and Coorg, Circular Memorandum No. 11 *of* 1880—81, *dated* 11*th October* 1880.

At the request of the Judicial Commissioner, the Inspector General of Registration has the honor to direct the attention of Registering Officers in Mysore and Coorg to the Judicial Commissioner's Rules of Practice No. 28, dated 8th March 1880, paras 4 and 5 (*Vide Mysore Gazette*, Part II, page 169 of 20th idem) and to request that every facility be given to parties desiring to search the Register No. I and the indexes relating to immovable property.

2. Agreeably to Clause VIII of the Table of Registration Fees, the fee chargeable for any search is *one* rupee only, without reference to the number of books or number of years over which it may extend. The search must be made by the applicant in the presence of the Registering Officer who, if it prove fruitless, will give the party a certificate, should he require one.

3. When a particular document is searched for and the applicant gives the date or year of execution with name of executant or description of property, and the document, after reference to the indexes of the year named, is not found in the Register by the Registering Officer, he will certify that the document has not been registered.

4. When particulars as above are not given and the applicant merely searches the books to ascertain whether any document relating to a specified property has been registered at any time during a series of years, the Registering Officer, having given the party full access to the books, should certify that the Indexes and Registers of those years have been made available to the party for the purpose of search on his paying the prescribed fee.

H. HUDSON,
Inspector General of Registration,
Mysore.

MEDICAL DEPARTMENT.

The 7th October 1880.

Deaths registered from different Causes in the Provinces of Mysore and Coorg during the months of January and February 1880.

January 1880.

Division.	Name of District.	Population according to Census of 1871.			Total Deaths from all Causes.			Ratio of Deaths per cent of Population from all Causes.			Number of Births registered.		
		Males.	Females.	Total.	M.	F.	Total.	M.	F.	Total.	M.	F.	Total.
Nundydroog.	Bangalore District ...	414,543	413,811	828,354	656	605	1,261	·16	·15	·15	613	581	1,194
	Kolar do ...	309,685	309,269	618,950	537	474	1,011	·17	·15	·16	307	275	582
	Túmkúr do ...	315,440	316,799	632,239	436	448	884	·14	·14	·14	259	234	493
	Total of the Division...	1,039,668	1,039,879	2,079,547	1,629	1,527	3,156	·16	·15	·15	1,179	1,090	2,269
Ashtagram.	Mysore District	467,562	475,625	943,187	788	655	1,443	·16	·14	·15	606	551	1,157
	Hassan do	313,683	326,194	639,877	515	399	914	·16	·12	·14	385	359	744
	Total of the Division...	781,245	801,819	1,583,064	1,303	1,054	2,357	·17	·13	·15	991	910	1,901
Nagar.	Shimoga District ...	258,446	240,530	498,976	761	646	1,407	·29	·27	·28	411	428	839
	Kadur do	184,978	177,487	362,465	343	269	612	·18	·15	·17	206	197	403
	Chitaldroog do	271,587	259,773	531,360	515	420	935	·18	·16	·17	273	274	547
	Total of the Division ...	715,011	677,790	1,392,801	1,619	1,335	2,954	·23	·20	·21	890	899	1,789
	Total of the Province...	2,535,924	2,519,488	5,055,412	4,551	3,916	8,467	·18	·16	·17	3,060	2,899	5,959
	Coorg	94,454	73,858	168,312	134	88	222	·14	·12	·13	50	38	88

February 1880.

Division.	Name of District.	Population according to Census of 1871.			Total Deaths from all Causes.			Ratio of Deaths per cent of Population from all Causes.			Number of Births registered.		
		Males.	Females.	Total.	M.	F.	Total.	M.	F.	Total.	M.	F.	Total.
Nundydroog.	Bangalore District... ...	414,543	413,811	828,354	454	414	868	·11	·10	·11	537	532	1,069
	Kolar do	309,685	309,269	618,950	393	351	744	·13	·11	·12	246	223	469
	Túmkúr do	315,440	316,799	632,239	356	330	686	·11	·11	·11	286	245	531
	Total of the Division...	1,039,668	1,039,879	2,079,547	1,203	1,095	2,298	·12	·10	·11	1,069	1,000	2,069
Ashtagram.	Mysore District	467,562	475,625	943,187	642	488	1,130	·14	·10	·12	541	529	1,070
	Hassan do	313,683	326,194	639,877	428	347	775	·13	·11	·12	387	362	749
	Total of the Division...	781,245	801,819	1,583,064	1,070	835	1,905	·14	·10	·12	928	891	1,819
Nagar.	Shimoga District	258,446	240,530	498,976	618	600	1,218	·24	·25	·24	450	460	910
	Kadur do	184,978	177,487	362,465	241	230	471	·13	·13	·13	202	167	369
	Chitaldroog do	271,587	259,773	531,360	412	387	799	·15	·15	·15	355	326	681
	Total of the Division...	715,011	677,790	1,392,801	1,271	1,217	2,488	·17	·18	·17	1,007	953	1,960
	Total of the Province...	2,535,924	2,519,488	5,055,412	3,544	3,147	6,691	·14	·12	·13	3,004	2,844	5,848
	Coorg...	94,454	73,858	168,312	123	93	216	·13	·13	·13	67	57	124

J. HOUSTON, M. D.,
Surgeon to the Mysore Commission.

BANGALORE MUNICIPALITY.

NOTICES.

No. 358. *The* 10*th October* 1880.

It is hereby notified for the information of the public that, under the provisions of Sections 121 and 122 of the Bangalore Municipal Regulations of 1871, whoever destroys, defaces or pulls down any street board, or numbers on buildings shall, on conviction before a Magistrate, be liable to a penalty not exceeding 20 rupees.

No. 2428. *The* 11*th October* 1880.

Memo of propositions to be laid before the Ordinary Meeting of the Cantonment Municipal Commission, to be held at their Office Premises No. 12, Residency Road, on Tuesday the 26th October 1880, at 7½ A. M.

1. The usual monthly accounts for the month of September 1880.

2. Remission and exemption of house-tax.

3. List of agreements entered into by the President during the month of September 1880.

4. List of estimates sanctioned by the President during the month of September 1880.

5. Deferred Proceedings of last month relating to the disposal of tenders for lighting the Cantonment for the next 3 years.

6. Plan and estimate for the additional Municipal Offices proposed to be constructed contiguous to the Mayo Memorial Hall.

7. Proceedings of the Chief Commissioner of Mysore, No. 3688—Ml. 199, dated 28th September 1880, relating to potteries.

8. Proceedings of the Chief Commissioner of Mysore, No. 3791-2—208, dated 1st October 1880, sanctioning a grant of Rs. 150, applied for to defray Committee's charges for lighting experiments.

9. List of proposed works for insertion in the budget for the official year 1882—83.

10. Compensation for ground required to be taken up for the construction of additional mutton stalls at the Alsur Market and for houses to be taken up at Gangamacheri for the excavation of laterite.

J. H. ORR,
President, Town & Cantt. Ml. Commns.

NUNDYDROOG DIVISION.

NOTIFICATION.

The 14*th October* 1880.

Sessions for the Bangalore District will be held at Bangalore on Monday the 18th day of October 1880 and following days :—

The cases mentioned below are posted for trial :—

Magisterial No.	Sessions No.	Names of Prisoners.	Name of the Committing Magistrate.	Sections charged under—	Date of Committal.
	35	Bhima Rao Lakshminarnaiengar	Mr. E. Periera, Sur Amin and 2nd Magistrate, Town and Cantonment.	435, 436, 409, and 380, I. P. C.	9th October 1880.
27 of 1880.	36	1. Maduriga 2. Guruva 3. Maduriga	Mr. B. Srinivasaiengar, 1st Class Magistrate.	Section 302, I. P. C.	14th do

The Magistrates above named are hereby directed to cause all parties connected with the above noted cases to be in attendance at Bangalore before the Sessions Court on Monday the 18th instant at 11 A. M.

All cases committed prior to that date will be taken up for trial in addition to the above.

T. R. A. THUMBOO CHETTY,
Sessions Judge.

BANGALORE DISTRICT.

NOTIFICATION.

The 9th October 1880.

Descriptive roll of a female convict escaped from the Female Wards on the night of Friday the 8th October 1880.

Jail No.—4759. *Name and Father's Name*—Muni, daughter of Venkatappa. *Place of Residence*—Shrinivaspur Kasba, Kolar District. *Caste and Profession*—Gollar, cooly. *Age and Height*—24 years, 5 feet. *Crime, date and period of Sentence*—Theft in a building and being an old offender, 2 years and 6 months, from 24th May 1880.—*Awarding Court*—1st Class Magistrate, Kolar District. *Descriptive marks*—A small scar near the inner end of right collar-bone. *Particulars of Jail Clothing, &c*—1 re-committal cloth of black and yellow color and 1 white jacket marked with jail numbers. *Remarks*—A reward of 25 rupees is offered for her re-capture.

J. HENDERSON, M. D.,
Supt., Central Jail.

TUMKUR DISTRICT.

NOTICE AS PER SECTION 354 OF THE CODE OF CIVIL PROCEDURE.

The 24th September 1880.

It is hereby declared that one Gare Kodi of Túmkúr is insolvent and as such entitled to the benefit of the provisions of the Chapter XX of the Code of Civil Procedure, and it is ordered that the said insolvent be and is hereby discharged from custody and from all liability to be arrested or imprisoned in respect of any of the debts mentioned in the schedule filed in Insolvent Case No. 9 of 1880 on the file of this Court.

A. KRISHNASAMAIENGAR,
Offg. Sub-Judge.

NOTICE UNDER SECTION 354 OF THE CODE OF CIVIL PROCEDURE.

The 11th October 1880.

It is hereby declared that the undermentioned person is an insolvent and as such entitled to the benefit of the provisions of Chapter XX of the Code of Civil Procedure, and it is ordered that the said insolvent be and is hereby discharged from custody and from all liability to be arrested or imprisoned in respect of any of the debts mentioned in the schedule filed with the records of the case concerned.

Bandi Viranna of Túmkúr. . In Insolvent Case No. 11 of 1880.

E. CHITAMBRAM IYER,
Subordinate Judge.

MYSORE DISTRICT.

The 2nd October 1880.

Descriptive roll of a convict who escaped from a gang of prisoners working within the precincts of the Mysore Jail at about 6-30 A. M. on the 2nd October 1880.

Jail Register No.—8639. *Name and Father's Name*—Guruva *alias* Malla, son of Malla. *Place of Residence*—Sivarampet, Mysore. *Caste and Profession*—Gollar, domestic servant. *Age and Height*—35 years, 5 feet 3¾ inches. *Crime and period of sentence*—Theft, 2 years' rigorous imprisonment from 9th August 1880. *Awarding Court*—Town Magistrate, Mysore, Case No. 269 of 1880. *Descriptive Marks*—Color brown, scars on either temple and just above eye-brows, a scar on inner part of right thigh about the lower third, two vaccination marks on either arm, either big toe turned outwards a little and a scar just below navel. Has a fetter gall on his right leg. A reward of rupees twenty-five will be given for the prisoner's re-capture.

T. J MCGANN,
Supt., Mysore Jail.

KADUR DISTRICT.

NOTIFICATION.

The 9th October 1880.

Tenders are invited for the execution of following Municipal original works in the Kadur District during the official year 1880—81.

2. Tenders must be in the P. W. D. Form No. 110, A.

Total.	Birur.	Tarikere.	Name of Municipality.	Amount of Estimate.
	Constructing V shaped drains in the Town.	Constructing side drains to the bazar streets of the Town.	Name of Work.	
206 4 0 ...	30 0 0...	176 4 0...	Earth work excavation.	
1,002 0 0 ...	...	1,002 0 0...	Rough stone work in clay.	
981 0 0 ...	...	981 0 0...	Work in burnt stone covering slabs.	
2,174 0 0 ...	2,174 0 0...	... ...	Work in burnt stone slabs.	
317 0 0 ...	42 0 0...	275 0 0...	Gravelling.	
69 12 0 ...	4 0 0...	65 12 0...	Contingency.	
4,750 0 0 ...	2,250 0 0...	2,500 0 0...	Total.	
2,650 0 0 ...	2,250 0 0...	400 0 0...	Amount of allotment for 1880—81.	

3. The above works must be commenced on or about the 15th November 1880 and completed to the extent of allotment by the end of March 1881.

4. The remaining portion of the work at Tarikere should be executed in the following year or years, as the case may be, to the extent of allotment for those years.

5. Further particulars shall be obtained in the Deputy Commissioner's Office at Chikmagalur.

6. Tenders to reach the undersigned on or before the 31st October 1880.

7. Earnest money according to form No. 110, A., to be forwarded with each tender, and which will be returned to the party whose tender is not accepted.

8. The Deputy Commissioner does not bind himself to accept the lowest or any tender.

S. VENKAT VARDAIENGAR,
Offg. Dy. Commissioner.

Season Report of the Shimoga District for the month of September 1880.

Rain-fall.—The rain-fall in the several taluks of the District during the month was as follows :—

	Inches.	Cents.		I.	C.
Shimoga	3	44	Sorab	3	25
Channagiri	1	65	Ságar	4	37
Honnali	2	78¾	Nagar	13	65
Shikarpur	3	50	Kavaledurga ..	6	40½

The average readings of the thermometer at Shimoga were 75·3 at 9-30 A. M. and 78·46 at 3-30 P. M.

Lands.—Lands assessed at Rs. 649—8—0 were taken up for cultivation against lands assessed at Rs. 5,002 given up.

Health.—Fairly good.

Cattle.—Murrain and mouth and foot disease prevalent.

Prices.—Easy.

V. N. NARSIMMAIENGAR,
Dy. Commissioner.

Abstract of Meteorological Reports received from Head-Quarters of Districts in the Province of Mysore, from 16th to 30th September 1880.

DISTRICT.	Thermometer. *Averages for the half month.* 9-30 A. M. Dry bulb.	Wet bulb.	Difference.	3-30 P. M. Dry bulb.	Wet bulb.	Difference.	Thermometer. Maximum.	Minimum.	Rain. Inches.	Cents.	Wind.
Kolar	74	...	...	76	...	...	77	67	...	37	S. W.
Túmkúr ...	77	65	12	88	76	12	88	63	..	4	S. W.
Mysore*... ...	...	...	..	...	...	...	...	...	...	...	...
Hassan	61	31	30	71	36	35	78	60	...	20	W.
Shimoga ...	75	...	...	78	...	...	..	...	..	72	...
Kadur ...	72	65	...	71	65	...	78	59	...	63	N. E. & S. W.
Chitaldroog ...	72	...	...	76	..	...	...	...	...	55	S. W. & S. S. W.

*Information not received.

Deaths registered in the Town and Cantonment of Bangalore for the Week ending 10*th September* 1880.

Estimated Population. { Males .. 72,236
Females .. 70,277

Total... 142,513

Diseases.	M.	F.	Total.
Cholera	...	...	...
Small-pox	...	...	...
Fevers	7	5	12
Bowel-complaints	4	2	6
Suicide	...	...	...
Wounding	...	...	...
Accident	...	...	...
Snake-bite or killed by wild beasts.	...	...	...
All other causes	9	11	20
Total.....	20	18	38
Births during the week ...	29	39	68

Deaths registered in the Town of Mysore for the Week ending 10*th September* 1880.

Estimated Population. { Males .. 29,081
Females .. 28,734

Total... 57,815

Diseases.	M.	F.	Total.
Cholera	...	...	...
Small-pox	...	...	...
Fevers	3	6	9
Bowel-complaints	4	2	6
Suicide	...	...	...
Wounding	...	...	...
Accident	...	...	...
Snake-bite or killed by wild beasts.	...	...	...
All other causes	...	...	...
Total.....	7	8	15
Births during the week ...	6	4	10

Deaths registered in the Town and Cantonment of Bangalore for the Week ending 17*th September* 1880.

Estimated Population. { Males. .. 72,236
Females.. 70,277

Total. .. 142,513

Diseases.	M.	F.	Total.
Cholera	...	...	...
Small-pox	...	...	...
Fevers	9	4	13
Bowel-complaints ...	4	2	6
Suicide	...	...	...
Wounding	...	...	...
Accident	3	...	3
Snake-bite or killed by wild beasts.	...	...	...
All other causes ...	17	13	30
Total.....	33	19	52
Births during the week ...	38	34	72

Deaths registered in the Town of Mysore for the Week ending 17*th September* 1880.

Estimated Population. { Males .. 29,081
Females .. 28,734

Total. .. 57,815

Diseases.	M.	F.	Total.
Cholera	...	...	...
Small-pox	..	..	...
Fevers	5	2	7
Bowel-complaints	6	1	7
Suicide	...	...	...
Wounding	...	...	...
Accident	...	...	...
Snake-bite or killed by wild beasts ...	...	...	...
All other causes	...	...	...
Total.....	11	3	14
Births during the week ...	6	7	13

8th October 1880.

J. HOUSTON, M. D.,
Surgeon to the Mysore Commn.

SALE OF TEAK TIMBER.

The 9th September 1880.

Notice is hereby given that tenders will be received by the undersigned up to 17th October 1880, for the purchase of teak logs lying in the Mudumallai and Benni Forests and Ootacamund Depôt.

2. The quantity in the forests is 37,200 cubic feet and in the Ooty Depôt 3,000 cubic feet. (There are also 12,000 cubic feet of 'refuse' teak in the said forests open for offer).

3. No tender will be accepted for purchase of less than 10 logs in the Ooty Depôt and 25 logs in the forest.

4. The highest tender will be accepted and the successful competitor should pay the purchase money into the Nilgiri Commissioner's Treasury within a week after the date of acceptance of the tender. Failing which the logs will be re-sold at public auction at his risk.

5. All logs should be removed from the Depôt or Forest duly covered by pass-port (signed by the undersigned) which will be granted on completing payment of the purchase money.

6. The undersigned reserves to himself the right of rejecting any or all tenders without assigning reason for so doing and of withdrawing the sale at any stage before acceptance of the purchase money.

7. For further particulars apply personally to the undersigned who will be at the Chief Commissioner's house, Mysore, between the 10th and 15th October 1880.

R. S. JAGO, *Major*,
Dy. Conservator of Forests.

JUST PUBLISHED.

Super-royal octavo, cloth.

Tribes of the Hindoo Koosh. *Price Rs.* 6 ; *packing and postage*, 6 *annas.*

Office of Superintendent of Government Printing, 8, Hastings Street, Calcutta.

Select Extra-Tropical Plants readily eligible for industrial culture or naturalization, with indications of their native countries and some of their uses, by Baron Ferd. Von Mueller. Indian edition, 1880. *Price Rs.* 4 ; *Packing and postage* 6 *annas.*

Office of Superintendent of Government Printing, 8, Hastings Street, Calcutta.

GOVERNMENT CINCHONA FEBRIFUGE.

This preparation is an efficient substitute for Quinine and can be purchased by Government officers, for public and charitable purposes, and by any one taking *twenty pounds* at a time, from the Superintendent, Botanical Garden, Calcutta, *for cash only*, at the following rates :—per four ounce tin *Rs.* 4, *ans.* 8 ; per eight ounce tin *Rs.* 8, *ans.* 8 ; per pound tin *Rs.* 16, *ans.* 8. The general public can be supplied by the Superintendent, Botanical Garden, *for cash only*, at the undernoted rates :—per four ounce tin *Rs.* 5, *ans.* 8; per eight ounce tin *Rs.* 10, *ans.* 8 ; per pound tin *Rs.* 20. This medicine is also sold by the principal European and Native druggists in Calcutta. Postage eight annas per 4 and 8 *oz.* tins and twelve annas per pound tin, in addition to the foregoing rates.

Mysore Government Press, Bangalore.—1880.

THE

MYSORE GAZETTE.

Published by Authority.

BANGALORE, SATURDAY, OCTOBER 23, 1880.

☞ Separate paging is given to this Part in order that it may be filed as a separate compilation.

PART II.

Notifications by the Judicial Commissioner, &c.

NOTIFICATIONS.

The 14th October 1880.

The undermentioned gentlemen have been enrolled as Advocates in the Courts of Mysore, under the Rules of 18th February 1879 :—

No. 65. Mr. Mysore Sétu Rao. | No. 66. Mr. Trivellore Subbaraya Modaliar.

The 18th October 1880.

The undermentioned persons have been enrolled as 2nd Grade Pleaders in the Courts of Mysore, under the Rules of 18th February 1879 :—

202. Saligram Tammaiya .. Proposing to practise in the Courts of the Ashtagram Division.
203. Chamarajnagar Krishnapa. Do do

J. D. SANDFORD,
Judicial Commissioner.

INAM DEPARTMENT.

NOTIFICATION.

No. 7. *The 13th October* 1880.

Inamdars are hereby informed that 11 *ad-interim* certificates for whole villages and 470 *ad-interim* extracts, &c., for the minor inams situated in the marginally noted taluks were forwarded to the Deputy Commissioners of the Bangalore, Kolar, Hassan and Kadur Districts, on the 13th October 1880, for distribution. They are accordingly to appear to receive the same on receipt of individual notices from the Amildars of the aforesaid taluks, who are hereby instructed to issue such notices without delay.

Dodballapur.	Attikuppa.
Closepet.	Belur.
Shrinivasapur.	Chennaraypatna.
Sidlaghatta.	Nagamangala.
Malur.	Haranhalli.
Gumnayakanpalya.	Narsipur.
Hassan.	Múdgere.
Arkalgúd.	

R. A. COLE,
Supt. of Inam Settlements.

MEDICAL DEPARTMENT.

Deaths registered from different Causes in the Provinces of Mysore and Coorg during the month of March 1880.

Division.	Name of District.	Population according to Census of 1871.			Total Deaths from all Causes.			Ratio of Deaths per cent of Population from all Causes.			Number of Births registered.		
		Males.	Females.	Total.	M.	F.	Total.	M.	F.	Total.	M.	F.	Total.
Nundydroog.	Bangalore District ...	414,543	413,811	828,354	519	492	1,011	·13	·12	·12	661	615	1,276
	Kolar do ...	309,685	309,269	618,950	405	436	841	·13	·14	·14	324	292	616
	Túmkúr do ...	315,440	316,799	632,239	483	462	945	·15	·15	·15	289	302	591
	Total of the Division...	1,039,668	1,039,879	2,079,547	1,407	1,390	2,797	·14	·13	·13	1,274	1,209	2,483
Ashtagram.	Mysore District	467,562	475,625	943,187	919	741	1,660	·20	·16	·18	750	719	1,469
	Hassan do	313,683	326,194	639,877	498	383	831	·16	·12	·14	415	339	754
	Total of the Division...	781,245	801,819	1,583,064	1,417	1,124	2,541	·18	·14	·16	1,165	1,058	2,223
Nagar.	Shimoga District ...	258,446	240,530	498,976	593	576	1,169	·23	·24	·24	535	493	1,028
	Kadur do	184,978	177,487	362,465	249	263	552	·15	·15	·15	249	221	470
	Chitaldroog do	271,587	259,773	531,360	483	459	942	·18	·17	·18	413	393	806
	Total of the Division ...	715,011	677,790	1,392,801	1,365	1,298	2,663	·19	·19	·19	1,197	1,107	2,304
	Total of the Province...	2,535,924	2,519,488	5,055,412	4,189	3,812	8,001	·17	·15	·16	3,636	3,374	7,010
	Coorg	94,454	73,858	168,312	160	121	281	·17	·16	·17	71	65	136

J. HOUSTON, M. D.,
Surgeon to the Mysore Commission.

BANGALORE MUNICIPALITY.

No. 8. *The* 21*st September* 1880.

Proceedings of an Ordinary Meeting of the Cantonment Municipal Commissioners held at their Office Premises No. 12, Residency Road, on Tuesday the 21st September 1880, at 7½ A. M.

President.

Dr. J. H. Orr, C. B.—*Present.*

Ex-Officio Members.

Present.—The Dy. Surgeon Genl., H. M.'s British Forces.
The Asstt. Quarter-Master Genl., M. Dn.
The District Superintendent of Police.
The Town and Cantt. 2nd Magistrate.

Absent.—The Executive Engr., Bangalore Division, Mysore D. P. W.
The Asstt. Engineer, Madras D. P. W.

Municipal Commissioners of Divisions.

No. 1, *Alsur Division.*

Present.—V. Sadasiva Modaliar, Esq.
R. P. Campbell, Esq.

No. 2, *Shule Division.*

Present.—Standish Lee, Esq.

No. 3, *Arab Lines and Fort Division.*

Present.—Abdul Husen Saib, Esq.
Captain P. Curley.

No. 4, *General Bazar Division.*

Present.—A. R. Sabhapati Modaliar, Esq.
Mahomed Saliha Saib, Esq.

Absent.—Abdul Khudus Khadri Khaji Saib, Esq.

No. 5, *Blackpalli Division.*

Present.—T. T. Leonard, Esq.
J. Ramaiya Naidu, Esq.

No. 6, *High Ground Division.*

Present.—Major-General C. G. Ottley.

Absent.—G. G. Brown, Esq.

Statement of Accounts.

1. The Progress Report, Account Current, Statement of Cash Balance and Assessor's Accounts for August 1880, together with the Mortuary Report for the same period, are submitted and after examination are adopted :—

Receipts.	Amount.		
I. Octroi... Class 1. Articles of food or drink for men or animals or duty on dry and green cocoanuts ...	682	11	0
„ 2. Animals for slaughter	...	...	...
„ 3. Fuel, lighting and washing	...	...	...
„ 4. Building materials	14	4	0
„ 5. Drugs, spices and gums	...	...	...
„ 6. Tobacco and betel-leaves	2,927	3	3
„ 7. Cloth	...	...	...
„ 8. Metals	...	...	...
II. Tax on houses, buildings or lands	7,549	13	5
III. Tax on professions and trades or collections of liquor license fees...	532	13	4
IV. Tax on carriages, horses, &c.	...	...	...
V. Tolls on carts, carriages, &c.	...	...	...
VI. Special taxes under Section II, Act VI of 1868—Conservancy ...	...	...	...
VII. Rents ... 1. Nazul lands	28	10	0
2. Do shops	455	14	7
3. Serais	...	...	...
4. Confiscated lands	...	...	...
5. Compound or site tax	...	...	...
VIII. Gardens	...	...	...
IX. Extra-ordinary. 1. Sale of houses and lands	...	...	..
2. Loans	...	...	...
3. Refunds and recoveries	135	5	4
4. Interest on securities and loans	...	...	...
5. Other Items	...	..	...
X. Fines	77	8	0
XI. Pounds	52	8	0
XII. Miscellaneous	192	5	3
XIII. Transfers and Contributions—Received from the Executive Engineer, Bangalore Division, on account of grant-in-aid for repairing suburban roads	1,177	7	10
Total Rupees.....	13,824	8	0
To Cash Balance brought forward from last month's accounts.....	15,401	4	7
Total Rupees.....	29,225	12	7

Expenditure.	Amount.		
I. Collections... 1. For Octroi tax	408	7	8
2. „ Tax on houses, buildings and lands ...	436	6	8
3. „ Tax on professions and trades ...	10	0	0
4. „ Tax on carriages, houses, &c. ...	..	...	...
5. „ Tolls on carts and other vehicles ...	...	...	...
6. Special taxes	...	...	...
7. Rents assigned to Municipality ...	108	0	0
II. Head Office Charges	728	2	2
III. Public Works. 1. Supervision	489	0	0
2. *a.* Original Works	2,660	10	2
b. Purchase of lands	319	12	0
c. Compensation for houses, &c. ...	...	...	...
3. Repairs	2,673	7	8
IV. Police	1,357	15	1
V. Education	...	...	...
VI. Charitable Grants. 1. Dispensary and Medical Charges ...	...	...	...
2. Vaccination	20	0	0
3. Asylums	...	...	...
VII. Conservancy	1,716	9	8
VIII. Road watering	96	0	0
IX. Lighting	742	13	6
X. Gardens ... 1. Public Gardens	...	...	..
2. Nursery	7	0	0
3. Farms	...	...	...
XI. Extraordinary... 1. Museums and Institutes ...	...	...	...
2. Purchase of Government Notes ...	...	...	...
3. Fairs and Exhibitions	...	..	...
XII. Miscellaneous ... 1. Repayment of loans	...	...	...
2. Refund of excess collections ...	...	...	...
3. Cattle Pound charges	52	11	0
4. Statistics and mortuary registration ...	90	0	0
5. Other miscellaneous items ...	301	11	3
XIII. Reserve	...	...	...
Total Rupees.....	12,218	10	10
To Cash Balance carried to next month's accounts.....	17,007	1	9
Total Rupees.....	29,225	12	7

Resolution.—Approved.

Mortuary Register, Bangalore.

2. Statement of Births and Deaths within Cantonment Municipal limits during the month of August 1880.

Causes of Deaths.	Europeans.		East Indians.		Musalmáns.		Hindus.		Native Christians.		Other Classes.		Buddhists.		Total.		Total in—		Difference.	
	M.	F.	M.	F.	M.	F.	M.	F.	M.	F.	M.	F.	M.	F.	M.	F.	August 1880.	July 1880.	Increase.	Decrease.
Cholera ...	...	...	...	...	...	...	...	...	...	...	...	...	...	...	...	...	...	...	...	...
Small-pox ...	...	...	...	...	...	...	...	1	...	...	...	...	...	...	...	1	1	...	1	...
Fevers... ...	...	...	...	1	5	3	9	6	1	2	...	...	...	...	15	12	27	23	4	...
Bowel-complaints ...	...	...	2	...	3	1	3	4	2	1	...	...	...	...	10	6	16	20	...	4
Suicide ...	...	...	...	...	...	...	...	...	...	...	...	...	...	...	...	...	...	...	...	...
Wounding ...	...	...	...	...	...	...	...	...	...	...	...	...	...	...	...	...	...	...	...	...
Accidents ...	...	...	...	...	...	...	1	2	...	...	...	...	...	...	1	2	3	2	1	...
Snake-bite or killed by wild beasts	...	...	...	...	...	...	...	...	...	...	...	...	...	...	...	...	...	...	...	...
Other Causes—																				
Hamplysis ...	...	...	...	...	...	...	1	...	...	...	...	...	...	...	1	...	1	...	...	...
Convulsion ...	1	1	...	...	2	...	4	6	2	2	...	...	...	...	9	9	18	...	...	...
Lock-jaw ...	...	...	...	1	...	...	4	5	...	...	...	...	...	...	4	6	10	...	...	...
Inflamation of lungs	...	...	...	...	...	...	1	1	...	1	...	...	...	...	1	2	3	...	...	...
Consumption ...	...	...	...	...	...	...	2	2	...	...	...	...	...	...	2	2	4	...	...	...
Debility ...	...	...	...	1	...	1	1	1	...	...	...	...	...	...	1	3	4	...	...	...
Phagendenia ulcer	...	...	...	...	...	...	1	1	...	...	...	...	...	...	1	1	2	...	...	...
Child birth ...	...	...	...	...	...	...	...	1	...	...	...	...	...	...	...	1	1	...	...	...
Asthma ...	...	...	...	...	...	...	1	2	...	1	...	...	...	...	1	3	4	...	...	...
Still-born ..	...	...	...	...	1	2	...	4	...	1	...	...	...	...	1	7	8	...	...	...
Dropsy ...	...	...	...	...	...	...	1	...	...	...	...	...	...	...	1	...	1	...	...	...
Anasarca ...	...	...	...	...	1	...	...	...	...	...	...	...	...	...	1	...	1	...	...	...
Old age ...	...	...	...	...	3	...	1	2	...	...	...	...	...	...	4	2	6	...	...	...
Paralysis ...	...	...	...	...	1	...	...	...	...	...	...	...	...	...	1	...	1	...	...	...
Delirium ...	...	...	...	...	...	...	...	1	...	...	...	...	...	...	...	1	1	...	...	...
Bronchitis ...	...	...	...	...	...	...	...	1	...	1	...	...	...	...	...	2	2	...	...	...
Apoplexy ...	...	...	...	...	...	...	...	1	...	...	...	...	...	...	...	1	1	...	...	...
Fits ...	...	...	...	...	...	...	1	...	...	...	...	...	...	...	1	...	1	...	...	...
Ascites ...	...	...	...	...	1	...	...	1	...	...	...	...	...	...	1	1	2	...	...	...
Disease of the brain	1	...	...	...	...	...	1	...	...	...	...	...	...	...	2	...	2	...	...	...
Melutis	...	...	...	...	...	...	...	1	...	...	...	...	...	...	...	1	1	...	...	...
Jaundice ...	...	...	...	...	...	...	...	1	...	...	...	...	...	...	...	1	1	...	...	...
Scrofula ...	...	...	...	...	...	1	...	...	...	...	...	...	...	...	...	1	1	...	...	...
Phthisis ...	...	...	...	...	...	...	1	...	...	...	...	...	...	...	1	...	1	...	...	...
Pneumonia ...	...	1	...	...	...	...	...	...	...	...	...	...	...	...	...	1	1	...	...	...
Total Other Causes.....	2	2	...	2	9	4	20	31	2	6	...	...	...	...	33	45	78	69	9	...
Total Deaths.....	2	2	2	3	17	8	33	44	5	9	...	...	...	...	59	66	125	114	15	4
Total Births during the month...	2	3	3	5	29	24	65	78	9	14	...	...	...	...	108	124	232	180	52	...

Abstract of Mortuary Report and Percentage of Births and Deaths on the estimated Population, 78,176.

Classes.	Births.		Difference.		Percentage of Births.		Deaths.		Difference.		Percentage of Deaths.	
	July 1880.	August 1880.	Increase.	Decrease.	July 1880.	August 1880.	July 1880.	August 1880.	Increase.	Decrease.	July 1880.	August 1880.
Europeans ...	10	5	...	5	·24	·12	3	4	1	...	·07	·09
East Indians ...	8	8	...	...	·32	·32	4	5	1	...	·16	·20
Musalmáns	26	53	27	...	·17	·35	24	25	1	...	·15	·16
Hindus ...	113	143	30	...	·22	·29	64	77	13	...	·12	·15
Native Christians	23	23	...	...	·31	·31	19	14	...	5	·25	·19
Buddhists ...	...	...	...	...	...	...	...	...	...	...	...	...
Other Classes ...	...	...	...	...	...	...	...	...	...	...	...	...
Total.....	180	232	57	5	·23	·29	114	125	16	5	·14	·15

REMARKS.

There were 125 deaths during the month; 1 from small-pox, 27 from fevers, 16 from bowel-complaints, 3 from accidents and 78 from other causes as detailed in the previous page.

The number of deaths in August 1880 as compared with those in July 1880 and the corresponding month of last year were as follows :—

Of Europeans 4 against 3, Eurasians 5 against 4, Musalmáns 25 against 24, Hindus 77 against 64, and Native Christians 14 against 19, being 11 more than previous month, and 29 in excess of the total number of deaths registered in the corresponding month of last year.

Ages.

Classes.	No. died during the month.	Under 1 year.	1 to 6 years.	6 to 12 do.	12 to 20 do.	21 to 30 do.	31 to 40 do.	41 to 50 do.	51 to 60 do.	Above 60 do.	Total.
Europeans ...	4	...	3	...	...	1	...	...	...	...	4
East Indians ...	5	2	...	1	...	1	...	..	...	1	5
Musalmáns ...	25	5	5	1	..	2	2	2	3	5	25
Hindus ...	77	36	6	...	9	6	2	5	7	6	77
Native Christians.	14	7	2	2	...	3	...	...	...	...	14
Buddhists ...	...	...	...	...	...	...	...	...	...	...	..
Other Classes ...	...	...	...	...	...	...	...	...	...	...	...
Total.....	125	50	16	4	9	13	4	7	10	12	125

Resolution.—Approved.

List of Agreements entered into by the President.

3. List of agreements entered into by the President during the month of August 1880 :—

No.	Subject.
1	Agreement executed by P. Raju Modaliar and Kumarasami Modaliar for supplying bullocks with carts and drivers.
2	Do Munisami for supplying metal for roads.
3	Do do gravel do
4	Do by Khadar Saib for constructing mutton stalls in the Alsur Market.

Resolution.—Approved.

Retention of Detective Establishment and abolition of Mohatarfa Tax.

4. Read—Proceedings of the Chief Commissioner of Mysore, No. 2969-70—Ml. 139, dated 16th August 1880, sanctioning the retention of the Detective Establishment at a monthly cost of Rs. 48 and the abolition of a separate mohatarafa tax on houses in the Cantonment.

Resolution.—To be recorded.

Aloe hedge along the Line of Railway.

5. Read—Proceedings of the Chief Commissioner of Mysore, No. 3028-9—Ml. 145, dated 19th August 1880, declining sanction to the proposed removal of aloe hedge along the line of Railway within Municipal limits.

Resolution.—The Commissioners regret that their resolution urging the necessity for the removal of the aloe hedge along the Railway line should not have met with the approval of the Chief Commissioner, but as the measure proposed is in their opinion one of very considerable importance as affecting the health and safety of the public, they now unanimously resolve that the subject be once more submitted for the favorable consideration of the Chief Commissioner; they would beg to point out that the Bye-law as it at present stands has for years past without any difficulty been enforced in numerous instances and that if now qualified in the manner indicated the result must be a large amount of litigation as it is only natural to suppose that objection will be taken in almost every instance as to whether the locality under reference is sufficiently open or otherwise as to come under the operation of the Bye-law in its now proposed, amended, or qualified form. The Commissioners consider therefore that the preferable course would be either to cancel the Bye-law altogether or permit it to remain in force in its present entirety.

Tenders for lighting the Cantonment of Bangalore.

6. Read—Tenders for lighting the Cantonment of Bangalore for the next 3 years commencing from the 1st of January 1881.

Resolved.—That the final consideration of these tenders be deferred till the next meeting of the Board to enable the report of the lighting committee to be received.

Gratuity to Overseer Mahomed Husen.

7. Read—Proceedings of the Chief Commissioner of Mysore, No. 3343-4—Ml. 165, dated 7th September 1880, sanctioning a gratuity of Rs. 240 to Overseer Mahomed Husen.

Resolution.—To be recorded.

The 19th October 1880.

Memo of propositions to be laid before the next meeting of the Town Municipal Commission, to be held at their Office Premises, Bangalore Taluk Cutcherry, on Friday the 29th October 1880, at 7½ A. M.

1. The usual monthly accounts and mortuary return for the month of September 1880.

2. Proceedings of the Chief Commissioner of Mysore, No. 3548-49—Ml. 187, dated 16th September 1880, sanctioning the estimate amounting to Rs. 1,660 for the construction of a fish and poultry market in the Pettah.

3. Application for gratuity from Daffedar Vir Nayik of the Town Municipality.

4. Proceedings of the Chief Commissioner of Mysore, No. 4028-9 Ml. 217, dated 11th October 1880, allowing certain items of expenditure to stand in the current year's budget.

5. List of proposed works for insertion in the budget of 1881—82.

Deferred Propositions.

6. The consideration of tenders received for the lighting of the Town.

J. H. ORR,
President, Town & Cantt. Munl. Commns.

NUNDYDROOG DIVISION.

IN THE COURT OF DISTRICT JUDGE, NUNDYDROOG DIVISION.

Insolvency Case No. 180 *of* 1880.

In the matter of Chapter XX of the Code of Civil Procedure and in the matter of the petition of Timmappa residing in Bangalore.

ORDER.—The Court having examined the applicant, the said Timmappa, in the presence of such of the creditors as appeared, as to his circumstances and his future means of payment, and having heard such of the creditors as did so appear, hereby declares under the provisions of Section 351 of the Code of Civil Procedure the said Timmappa to be an insolvent and entitled to the benefit of the provisions of the aforesaid Chapter XX of the Code of Civil Procedure and orders his discharge from custody.

Given under my hand and the seal of the Court this 14th of July 1880.

IN THE COURT OF THE DISTRICT JUDGE, NUNDYDROOG DIVISION.

Insolvency Case No. 195 *of* 1880.

In the matter of Chapter XX of the Code of Civil Procedure and in the matter of the petition of Katappa Nayaka residing at Arle Pettah, Bangalore.

ORDER.—The Court having examined the applicant, the said Katappa Nayaka, in the presence of such of the creditors as appeared, as to his circumstances and his future means of payment, and having heard such of the creditors as did so appear, hereby declares under the provisions of Section 351 of the Code of Civil Procedure the said Katappa Nayaka to be an insolvent and entitled to the benefit of the provisions of the aforesaid Chapter XX of the Code of Civil Procedure and orders his discharge from custody.

Given under my hand and the seal of the Court this 26th July 1880.

IN THE COURT OF THE DISTRICT JUDGE, NUNDYDROOG DIVISION.

Insolvency Case No. 212 *of* 1880.

In the matter of Chapter XX of the Code of Civil Procedure and in the matter of the petition of Hanumanna residing at Ganigar Pettah, Bangalore.

ORDER.—The Court having examined the applicant, the said Hanumanna, in the presence of such of the creditors as appeared, as to his circumstances and his future means of payment, and having heard such of the creditors as did so appear, hereby declares under the provisions of Section 351 of the Code of Civil Procedure the said Hanumanna to be an insolvent and entitled to the benefit of the provisions of the aforesaid Chapter XX of the Code of Civil Procedure and orders his discharge from custody.

Given under my hand and the seal of the Court this 11th of August 1880.

IN THE COURT OF THE DISTRICT JUDGE, NUNDYDROOG DIVISION.

Insolvency Case No. 224 *of* 1880.

In the matter of Chapter XX of the Code of Civil Procedure and in the matter of the petition of Tiruvengadam Pille residing at Chule, Bangalore.

ORDER.—The Court having examined the applicant, the said Tiruvengadam Pille, in the presence of such of the creditors as appeared, as to his circumstances and his future means of payment, and having heard such of the creditors as did so appear, hereby declares under the provisions of Section 351 of the

Code of Civil Procedure the said Tiruvengadam Pille to be an insolvent and entitled to the benefit of the provisions of the aforesaid Chapter XX of the Code of Civil Procedure and orders his discharge from custody.

Given under my hand and the seal of the Court this 11th of August 1880.

IN THE COURT OF THE DISTRICT JUDGE, NUNDYDROOG DIVISION.

Insolvency Case No. 225 *of* 1880.

In the matter of Chapter XX of the Code of Civil Procedure and in the matter of the petition of T. J. Agambram Pille residing at Chule, Bangalore.

ORDER.—The Court having examined the applicant, the said T. J. Agambram Pille, in the presence of such of the creditors as appeared, as to his circumstances and his future means of payment, and having heard such of the creditors as did so appear, hereby declares under the provisions of Section 351 of the Code of Civil Procedure the said T. J. Agambram Pille to be an insolvent and entitled to the benefit of the provisions of the aforesaid Chapter XX of the Code of Civil Procedure and orders his discharge from custody.

Given under my hand and the seal of the Court this 11th of August 1880.

IN THE COURT OF THE DISTRICT JUDGE, NUNDYDROOG DIVISION.

Insolvency Case No. 194 *of* 1880.

In the matter of Chapter XX of the Code of Civil Procedure and in the matter of the petition of Mr. C. Ashworth residing in Cantonment of Bangalore.

ORDER.—The Court having examined the applicant, the said Mr. C. Ashworth, in the presence of such of the creditors as appeared, as to his circumstances and his future means of payment, and having heard such of the creditors as did so appear, hereby declares under the provisions of Section 351 of the Code of Civil Procedure the said Mr. C. Ashworth to be an insolvent and entitled to the benefit of the provisions of the aforesaid Chapter XX of the Code of Civil Procedure and orders his discharge from custody.

Given under my hand and the seal of the Court this 12th of August 1880.

T. R. A. THUMBOO CHETTY,
District Judge.

BANGALORE DISTRICT.

NOTIFICATION.

The 9th October 1880.

Descriptive roll of a female convict escaped from the Female Wards on the night of Friday the 8th October 1880.

Jail No.—4759. *Name and Father's Name*—Muni, daughter of Venkatappa. *Place of Residence*—Shrinivaspur Kasba, Kolar District. *Caste and Profession*—Gollar, cooly. *Age and Height*—24 years, 5 feet. *Crime, date and period of Sentence*—Theft in a building and being an old offender, 2 years and 6 months, from 24th May 1880.—*Awarding Court*—1st Class Magistrate, Kolar District. *Descriptive marks*—A small scar near the inner end of right collar-bone. *Particulars of Jail Clothing, &c.*—1 re-committal cloth of black and yellow color and 1 white jacket marked with jail numbers. *Remarks*—A reward of 25 rupees is offered for her re-capture.

J. HENDERSON, M. D.,
Supt., Central Jail.

TUMKUR DISTRICT.

NOTICE UNDER SECTION 354 OF THE CODE OF CIVIL PROCEDURE.

The 11th October 1880.

It is hereby declared that the undermentioned person is an insolvent and as such entitled to the benefit of the provisions of Chapter XX of the Code of Civil Procedure, and it is ordered that the said insolvent be and is hereby discharged from custody and from all liability to be arrested or imprisoned in respect of any of the debts mentioned in the schedule filed with the records of the case concerned.

Bandi Viranna of Túmkúr.. In Insolvent Case No. 11 of 1880.

E. CHITAMBRAM IYER,
Subordinate Judge.

MYSORE DISTRICT.

The 2nd October 1880.

Descriptive roll of a convict who escaped from a gang of prisoners working within the precincts of the Mysore Jail at about 6-30 A. M. on the 2nd October 1880.

Jail Register No.—8639. *Name and Father's Name*—Guruva *alias* Malla, son of Malla. *Place of Residence*—Sivarampet, Mysore. *Caste and Profession*—Gollar, domestic servant. *Age and Height*—35 years, 5 feet 3¾ inches. *Crime and period of sentence*—Theft, 2 years' rigorous imprisonment from 9th August 1880. *Awarding Court*—Town Magistrate, Mysore, Case No. 269 of 1880. *Descriptive m arks*—Color brown, scars on either temple and just above eye-brows, a scar on inner part of right thigh about the lower third, two vaccination marks on either arm, either big toe turned outwards a little and a scar just below navel. Has a fetter gall on his right leg. A reward of rupees twenty-five will be given for the prisoner's re-capture.

T. J MCGANN,
Supt., Mysore Jail.

KADUR DISTRICT.

NOTIFICATION.

The 9th October 1880.

Tenders are invited for the execution of following Municipal original works in the Kadur District during the official year 1880—81.

2. Tenders must be in the P. W. D. Form No. 110, A.

Total.	Birur.	Tarikere.	Name of Municipality.	Amount of Estimate.
	Constructing Vshaped drains in the Town.	Constructing side drains to the bazar streets of the Town.	Name of Work.	
206 4 0 ...	30 0 0...	176 4 0...	Earth work excavation.	
1,002 0 0 ...	...	1,002 0 0...	Rough stone work in clay.	
981 0 0 ...	...	981 0 0...	Work in burnt stone covering slabs.	
2,174 0 0 ...	2,174 0 0...	... ...	Work in burnt stone slabs.	
317 0 0 ...	42 0 0...	275 0 0...	Gravelling.	
69 12 0 ...	4 0 0...	65 12 0...	Contingency.	
4,750 0 0 ...	2,250 0 0...	2,500 0 0...	Total.	
2,650 0 0 ...	2,250 0 0...	400 0 0...	Amount of allotment for 1880—81.	

3. The above works must be commenced on or about the 15th November 1880 and completed to the extent of allotment by the end of March 1881.

4. The remaining portion of the work at Tarikere should be executed in the following year or years, as the case may be, to the extent of allotment for those years.

5. Further particulars shall be obtained in the Deputy Commissioner's Office at Chikmagalur.

6. Tenders to reach the undersigned on or before the 31st October 1880.

7. Earnest money according to form No. 110, A., to be forwarded with each tender, and which will be returned to the party whose tender is not accepted.

8. The Deputy Commissioner does not bind himself to accept the lowest or any tender.

S. VENKAT VARDAIENGAR,
Offg. Dy. Commissioner.

SEASON REPORTS FOR THE MONTH OF SEPTEMBER 1880.

Bangalore District.

Rain-fall.—There were slight showers of rain throughout the District during the month. The tanks received no perceptible increase in water supply.

Crops.—The crops are reported to be generally in good condition; but in some parts sadly in need of seasonable showers. The seeds sown during the month were gram, hutchellu, and Kartik paddy. No crops harvested.

Health.—Generally good. Fever and ague prevalent in some places.

Mortality.—There were 947 deaths during the month of August against 1,077 in the preceding month shewing a decrease of 130 deaths.

Cattle.—Murrain still continues to prevail in some taluks of the District, and the number of deaths from this source was 604 against 878 in the preceding month. The number of deaths from all causes amounted to 3,282, of these 284 were killed by wild beasts.

Lands.—Lands assessed at Rs. 1,684—11—4 were taken up on cultivation.

L. RICKETTS,
Dy. Commissioner.

Túmkúr District.

Rain.—The rain-fall throughout the District was as follows:—

	I.	C.		I.	C.
Túmkúr	3	62	Sira ..	1	39
Koratagere	2	25	Kunigal ..	4	80
Maddagiri	0	87	Kadaba ..	2	10
Chiknayakanhalli ..	0	20	Honnavalli ..	0	50

Weather.—Sultry.

Crops.—Horse-gram, green gram, sesamum seed 2nd sort, and same sown during the month; javari, black gram, green gram, &c., are being harvested.

Public Health.—Good. The total number of deaths from all causes amounted to 631 in August against 687 in July.

Cattle.—Dod roga still prevalent in Kunigal and Sira Taluks. Loss among cattle was 1,072 against 2,147 for August 1880.

Lands.—Lands yielding an assessment of Rs. 2,412—14—0 were taken up for cultivation, while none were relinquished.

Prices.—Rice, ragi, dál, ballar, horse-gram, wheat, ghee and jaggory were sold at 13 seers, and 12 chittaks, 27 S. 5. C., 10 S. 6 C., 28 S., 33 S. 14 C., 8 S., 5 C., 1 S. 12 C., and 5 S. 14 C., respectively, per rupee.

K. SESHADRI IYER,
Dy. Commissioner.

Kadur District.

Rain-fall.—The following table shews the rain-fall at the head-quarters of taluks and the surrounding coffee estates during the month :—

Taluks.	I.	C.	*Estates.*	I.	C.
Chikmagalur ..	1	84	Santaveri	3	30
Tarikere ..	1	47	Balur	4	17
Lakvalli	2	87½	Alikan	11	60
Koppa	6	32½	Nemar	13	2
Banavar..	1	24	Mailimane	3	76
Múdgere ..	8	80	Koldhitlu	8	60
Kadur of the Banavar Taluk	0	45	Ambodikan	7	95
			Basgod	4	10
			Karehadlu	3	97

The rain-fall at Chikmagalur in this month was 1 inch and 84 cents against 2 inches and 72 cents in the previous month and 63 cents in September 1879.

Thermometer.—The average readings of the thermometer recorded in the meteorological register at the Civil Dispensary at Chikmagalur were as shewn below :—

	9—30 A. M.	3—30 P. M.		9—30 A. M.	3—30 P. M.
August 1880	72·51	73·06	September 1880	72·30	71·56

Seeds sown.—Ragi, javari, horse-gram, kurasani and dál in the Tarikere Taluk ; horse-gram and kura sani in the Lakvalli Taluk. Horse-gram and sugar-cane in the Chikmagalur Taluk. The transplanting of paddy seedlings was completed in the Múdgere Taluk.

Crops.—Generally good, but the crops in the Tarikere, Banavar and Múdgere Taluks want more rain.

Crops harvested.—Coriander and wheat in the Tarikere Taluk, gid ragi, garlic, and onion, coriander, yellu, green and black-gram, mustard and menthya in the Chikmagalur Taluk, yellu, green-gram, javari and coriander in the Banavar Taluk ; cardamom was being picked in the Koppa Taluk.

Coffee prospects.—Good.

Health.—Intermittent fever prevailed to some extent in the Banavar Taluk, dysentery, ague and fever in the Koppa Taluk.

Live-stock.—Hoof disease and murrain (dodroga) prevailed in all the taluks and mouth disease also in the Chikmagalur Taluk. The loss of cattle from these and other causes was 1,670 in the month of September against 1,683 in the previous one and 727 in September 1879.

Lands.—Land assessed at Rs. 611—8—0 was newly taken up for cultivation. Relinquishments of land brought to account in this month amount to Rs. 38—3—6.

Prices.—Stationary.

S. VENKAT VARDAIENGAR,
Off. Dy. Commissioner.

Chitaldroog District.

Weather.—The weather was cloudy and close. Rain fell in all the taluks of the District, except in certain parts of the Hosdurga Taluk. The quantity of rain gauged at head-quarters of the taluk is as follows :—

	I.	C.		I.	C.
Chitaldroog	3	50	Hiriyur	1	6½
Davangere	2	6	Budihal	1	0
Kankuppa	3	27½	Hosdurga	1	16
Dodéri	2	0	Pavagada	2	0

The average reading of the thermometer at head-quarters of the District was 72·50 at 9-30 A. M. and 76·16 at 3-30 P. M.

Crops.—The dry crops suffered in some parts of the District from want of rain, while in other parts they were in a thriving condition. The seeds sown were cotton, sáme, gram, and navane, while black and green-gram, gingelly, sajje, javari and wheat were harvested.

Health.—The health of the population was good.

Cattle.—Cattle suffered from mouth and hoof diseases in the Taluks of Chitaldroog, Hiriyur and Dodéri.

Prices.—The markets were well supplied with grain and the average price was :—

Per rupee.	Per rupee.	Per rupee.
Rice 12 to 14 seers.	Ragi 40 to 48 seers.	Javari 30 to 36 seers.

D. NAMAKAL RAO,
For Dy. Commr.

Deaths registered in the Town and Cantonment of Bangalore for the Week ending 24th September 1880.

Estimated Population. { Males .. 72,236; Females .. 70,277 } Total.... 142,513

Diseases.	M.	F.	Total.
Cholera ...	...	...	...
Small-pox	1	1	2
Fevers ...	8	7	15
Bowel-complaints	4	2	6
Suicide ...	...	...	...
Wounding	...	...	...
Accident	...	...	...
Snake-bite or killed by wild beasts.	...	...	...
All other causes	8	18	26
Total.....	21	28	49
Births during the week	30	37	67

Deaths registered in the Town of Mysore for the Week ending 24th September 1880.

Estimated Population. { Males .. 29,081; Females .. 28,734 } Total.... 57,815

Diseases.	M.	F.	Total.
Cholera	...	...	...
Small-pox	...	...	...
Fevers	7	5	12
Bowel-complaints	4	1	5
Suicide	...	...	...
Wounding	...	...	...
Accident	...	1	1
Snake-bite or killed by wild beasts.	...	...	...
All other causes	...	...	...
Total.....	11	7	18
Births during the week	8	2	10

Deaths registered in the Town and Cantonment of Bangalore for the Week ending 1st October 1880.

Estimated Population. { Males. .. 72,236; Females.. 70,277 } Total. .. 142,513

Diseases.	M.	F.	Total.
Cholera...	...	...	...
Small-pox	...	...	...
Fevers...	5	10	15
Bowel-complaints	1	2	3
Suicide...	...	...	...
Wounding	...	...	...
Accident	...	...	...
Snake-bite or killed by wild beasts.	...	...	...
All other causes	16	5	21
Total.....	22	17	39
Births during the week	37	28	65

Deaths registered in the Town of Mysore for the Week ending 1st October 1880.

Estimated Population. { Males .. 29,081; Females .. 28,734 } Total.... 57,815

Diseases.	M.	F.	Total.
Cholera	...	...	...
Small-pox	...	...	...
Fevers	3	1	4
Bowel-complaints	3	4	7
Suicide	...	...	...
Wounding	...	...	...
Accident	...	...	...
Snake-bite or killed by wild beasts	...	...	...
All other causes	...	...	...
Total.....	6	5	11
Births during the week	4	2	6

J. HOUSTON, M. D.,
Surgeon to the Mysore Commn.

18*th October* 1880.

LOST—

The left half of the following Currency Note :—

No.	Circle.	Value.	Claimant.
B 56—15649	Madras.	Rs. 10	M. Farrid Khan, Accountant, Munsiff's Court, Kadur Sub-Division.

SALE OF TEAK TIMBER.

The 9th September 1880.

Notice is hereby given that tenders will be received by the undersigned up to 17th October 1880, for the purchase of teak logs lying in the Mudumallai and Benni Forests and Ootacamund Depôt.

2. The quantity in the forests is 37,200 cubic feet and in the Ooty Depôt 3,000 cubic feet. (There are also 12,000 cubic feet of 'refuse' teak in the said forests open for offer).

3. No tender will be accepted for purchase of less than 10 logs in the Ooty Depôt and 25 logs in the forest.

The highest tender will be accepted and the successful competitor should pay the purchase money into the Nilgiri Commissioner's Treasury within a week after the date of acceptance of the tender. Failing which the logs will be re-sold at public auction at his risk.

5. All logs should be removed from the Depôt or Forest duly covered by pass-port (signed by the undersigned) which will be granted on completing payment of the purchase money.

6. The undersigned reserves to himself the right of rejecting any or all tenders without assigning reason for so doing and of withdrawing the sale at any stage before acceptance of the purchase money.

7. For further particulars apply personally to the undersigned who will be at the Chief Commissioner's house, Mysore, between the 10th and 15th October 1880.

R. S. JAGO, *Major*,
Dy. Conservator of Forests.

JUST PUBLISHED.

Super-royal octavo, cloth.

Tribes of the Hindoo Koosh. *Price Rs.* 6 ; *packing and postage*, 6 *annas.*

Office of Superintendent of Government Printing, 8, Hastings Street, Calcutta.

Select Extra-Tropical Plants readily eligible for industrial culture or naturalization, with indications of their native countries and some of their uses, by Baron Ferd. Von Mueller. Indian edition, 1880. *Price Rs.* 4 ; *Packing and postage* 6 *annas.*

Office of Superintendent of Government Printing, 8, Hastings Street, Calcutta.

GOVERNMENT CINCHONA FEBRIFUGE.

This preparation is an efficient substitute for Quinine and can be purchased by Government officers, for public and charitable purposes, and by any one taking *twenty pounds* at a time, from the Superintendent, Botanical Garden, Calcutta, *for cash only*, at the following rates :—per four ounce tin *Rs.* 4, *ans.* 8 ; per eight ounce tin *Rs.* 8, *ans.* 8 ; per pound tin *Rs.* 16, *ans.* 8. The general public can be supplied by the Superintendent, Botanical Garden, *for cash only*, at the undernoted rates :—per four ounce tin *Rs.* 5, *ans.* 8; per eight ounce tin *Rs.* 10, *ans.* 8 ; per pound tin *Rs.* 20. This medicine is also sold by the principal European and Native druggists in Calcutta. Postage eight annas per 4 and 8 *oz.* tins and twelve annas per pound tin, in addition to the foregoing rates.

Catalogue of Books registered in accordance with the provisions

	Title in full.	Language in which the book is written.	Name of the Author, Translator, or Editor of the book or any part thereof.	Subject.	Place of printing and place of publication.	Name of firm of the printer and the name or firm of the publisher.
	1	2	3	4	5	6
Books.	"The Registration Laws" in force in the Territories of His Highness the Maha Raja of Mysore and in the Province of Coorg.	English.	*Compiler.* A. S. Raghavacharier...	The Registration Act of 1877, and associated rules.	Caxton Press, Bangalore.	Messrs. Leonard and Kent, Printer and Publisher.
	A Manual of questions and answers in Kanarese upon the Regular Police Rules, the Code of Criminal Procedure, Indian Evidence Act, &c., &c., compiled and arranged for the use of the Mysore Police.	Kanarese.	P. Chokkalingam Pille, Head-quarter Inspector of Police in charge of Police School, Bangalore	Police Rules.	Vichára Darpana Press, Bangalore.	P. Chokkalingam Pille, Publisher.
	Faiz ul Bári, 4th Vol.	Hindustani and Arabic.	Moulvi Abdul Hai Sahib	Translation of Tayasírul Kháři, a commentary on Sahih Bakári or the sayings of Muhammad.	Mahomadi Press. Bangalore.	Moulvi Abdul Khadar Ali Saib, Printer and Publisher.
	Do. 1st and 2nd Vols. ...	Do	Do		Do	Do
Pamphlets.	ನಾಮಲಿಂಗಾನುಶಾಸನ ಪ್ರಥಮ ಕಾಂಡ ಪು					
	Námalingánushásana, 1st Part. ...	Sanskrit.	Amarasimha ...	The Sanskrit Lexicon called Amarakosha.	Vichara Darpana Press, Bangalore.	M. Kamanna, Printer.
	ನಾಮಲಿಂಗಾನುಶಾಸನ.					
	Námalingánushásana ...	Do	Do	Do	Do	Do
	ನವಗ್ರಹಸ್ತೋತ್ರ					
	Navagraha Stotra, &c.	Do	Veda Vyása, Das'aratha, Pippaláda and Kálidása.	Worship of the Planets.	Mysore Book Depôt Press, Bangalore.	V. B. Subbaiya, Printer and Publisher.
	ಸುಭದ್ರಾ ಕಲ್ಯಾಣ		*Compiler*			
	Subhadra Kalyána.	Kannada	Ráma Bhatta ...	Marriage of Subhadra from the Mahá Bhárata, in Yaksha gána metre.	Do	Do
	ಪಂಚೀಕರಣವೆಂಬ ವೇದಾಂತಗ್ರಂಥ.		*Compiler.*			
	Panchíkarana	Do	J. Surappa ...	Manual of Vedánta principles.	Do	Do
	ಗೋವುಕಥೆ ಮತ್ತು ವಿಭೀಷಣಬುದ್ಧಿ.					
	Govu Kathe and Vibhíshana Buddhi ...	Do	Not known ...	Moral story and advice.	Do	Do Printer and K. Bhaskaraiya, Publisher.

OFFICE OF THE CURATOR, GOVERNMENT LIBRARY,
BANGALORE, 1st *October* 1880.

of Act XXV of 1867 during the Quarter ending 30th September 1880.

Date of issue from the Press or of the publication.	Number of sheets, leaves, or pages.	Size.	1st, 2nd, or other number of edition.	No. of copies of which edition consists.	Whether printed or lithographed.	Price.	Name and residence of proprietor of copyright or any portion thereof.	Whether copyright is secured or not.	Remarks.
7	8	9	10	11	12	13	14	15	
						Rs. As. P.			
1st June 1880.	282	Demy 8vo.	First Edition.	500	Printed.	3 0 0	A. S. Raghavacharier, Sub-Registrar, Bangalore District.	Secured on the 16th July 1880.	
15th August 1880.	196	Do 12mo.	Do	2,000	Do	1 0 0	P. Chokkalingam Pille, Head-quarter Inspector of Police in charge of Police School, Bangalore.	Do 26th Aug 1880.	
6th July 1880.	164	Royal 4 to.	Do	500	Lithographed.	1 8 0	...	...	
17th Do	136	Do	Second Do	200	Do	1 4 0	...	...	
20th June 1880.	16	Demy 8vo.	Fifth Do	3,000	Printed.	0 1 0	...	...	
10th July do.	80	Do	Fourth Do	2,000	Do	0 3 0	...	...	
15th August do.	12	Do 12mo.	First Do	1,000	Do	0 1 0	...	...	
30th July do	48	Do 8vo.	Do	1,000	Do	0 6 0	...	...	
5th August do.	32	Do	Do	1,000	Do	0 4 0	V. B. Subbaiya, Bangalore.	Secured, 7th Sept. 1880.	
20th Do	12	Do	Do	1,000	Do	0 1 0	...	...	

(*Revised.*) L. RICE,
Director of Public Instruction,
Mysore & Coorg.

J. P. GARRETT,
Curator, Mysore Govt. Library.

Mysore Government Press, Bangalore.—1880.

THE

MYSORE GAZETTE.

Published by Authority.

BANGALORE, SATURDAY, OCTOBER 30, 1880.

☞ Separate paging is given to this Part in order that it may be filed as a separate compilation.

PART II.

Notifications by the Judicial Commissioner, &c.

JUDICIAL DEPARTMENT.

NOTIFICATION.

The 25th October 1880.

The undermentioned person has been enrolled as 2nd Grade Pleader in the Courts of Mysore, under the Rules of 18th February 1880 :—

204. Melkote Singlachar .. Proposing to practise in the Courts of the Ashtagram Division.

J. D. SANDFORD,
Judicial Commissioner.

INAM DEPARTMENT.

NOTIFICATIONS.

No. 7. *The 13th October* 1880.

Inamdars are hereby informed that 11 *ad-interim* certificates for whole villages and 470 *ad-interim* extracts, &c., for the minor inams situated in the marginally noted taluks were forwarded to the Deputy Commissioners of the Bangalore, Kolar, Hassan and Kadur Districts, on the 13th October 1880, for distribution. They are accordingly to appear to receive the same on receipt of individual notices from the Amildars of the aforesaid taluks, who are hereby instructed to issue such notices without delay.

Dodballapur.	Attikuppa.
Closepet.	Belur.
Shrinivasapur.	Chennaraypatna.
Sidlaghatta.	Nagamangala.
Malur.	Haranhalli.
Gumnayakanpalya.	Narsipur.
Hassan.	Múdgere.
Arkalgúd.	

No. 8. *The 13th October* 1880.

Inamdars are hereby informed that 42 final title-deeds for whole inam villages and 10 title-deeds for minor inams situated in the marginally noted taluks were forwarded to the Deputy Commissioners of the Túmkúr, Kadur and Hassan Districts, on the 13th October 1880, for distribution. They are accordingly to appear to receive the same on receipt of individual notices from the Amildars of the aforesaid taluks, who are hereby instructed to issue such notices without delay.

Túmkúr.	Maddagiri.
Kunigal.	Chikmagalur.
Kadaba.	Belur.

The *ad-interim* certificates issued already for the above inam villages and minor inams are hereby declared to be cancelled.

R. A. COLE,
Supt. of Inam Settlements.

FINANCIAL DEPARTMENT.

OPIUM--QUANTITY AND VALUE TO BE NOTED IN THE CASH BALANCE REPORTS ON THE TRANSFER OF TREASURIES FROM ONE OFFICER TO ANOTHER.

To—The Deputy Commissioners, Treasury Department, Circular No. 1481, *dated 27th October* 1880.

The Deputy Accountant General has the honor, agreeably to Rule 7, Chapter 3 of the Civil Account Code, to direct that in future reports of cash balance on the transfer of charge of a Treasury from one officer to another, the quantity and value of opium in the Treasury may be entered, Malwa opium being shewn separately from local opium.

RULES FOR IMPERIAL MONEY ORDER TRANSACTIONS IN TALUKS.

Circular No. 1482, *dated 29th October* 1880.

In order to extend to persons residing in the Taluks of Mysore the means of making remittances by Imperial Money Orders to places in British Territory, and also to enable them to cash such orders when sent to them, the following rules are prescribed :—

2. Any person wanting a Money Order at a Taluk Treasury will be supplied therefrom with the printed form of application which will be filled up by one of the Taluk Writers, if the remitter does not know English, and must be delivered there with the amount of the Money Order and the fee leviable. The Amildar will grant a receipt to the remitter in the form used for Mysore Money Orders, crediting the amount to taluk remittances, and will send the application to the District Treasury Officer, who will verify the amount shewn in the application by reference to the taluk account for the day, and having debited the total to the head of "Taluk Remittances," crediting it to that of Imperial Money Order Remittances and recording it in his Register of issues (A), will then proceed to dispose of the application in communication with the Post Master, Bangalore, in the manner laid down in para 2 of the Circular No. 1463, dated 23rd March 1880, without however giving the remitter any further receipt.

3. Imperial Money Orders payable to parties residing in any taluk will be sent by the Imperial Post Office, Bangalore, together with the usual two forms of receipt, to the Treasury Officer of the District, who having entered the order in his Register (C) will forward the documents through the anche to the address of the payee after having endorsed the money order as follows :—

To—The Amildar of

"Pay the amount of this money order to the payee named therein debiting it to "Taluk Remittances" on this voucher and taking his receipt thereon."

4. The payee will sign and give back the two separate receipts for the Money Order to the anche messenger for return to the District Treasury Officer, who will retain one and send the other to the Post Master, Bangalore. The Money Order will be paid on presentation at the Taluk Treasury and when charged in the taluk accounts the District Treasury Officer will credit the head of "Taluk Remittances," and debit Imperial Money Order Remittances in the usual way entering the order in his Register of payments (B).

H. HUDSON,
Dy. Acctt. General in Mysore.

BANGALORE MUNICIPALITY.

The 21st October 1880.

Copy of Proceedings of the Town Municipal Commission at a meeting held on Friday the 24th September 1880.

President.

Dr. J. H. Orr, C. B., *Present.*

Ex-Officio Members.

Present.—The Amildar of Bangalore.
Absent.—The Deputy Commissioner, Bangalore Dist.
The Executive Engineer, Nundydroog Divn.
The Commissary of Ordnance.
The Surgeon to the Mysore Commission.

Municipal Commissioners.

1st Division, Balé Pettah.

Present.—Mr. A. S. Raghavachar.
Absent.— Mr. B. Murry Gungiah.

2nd Division, Manavarte Pettah.

Present.—Mr. A. Srinivasachar.
Mr. Khazi Abed Jaffar Sahib.

3rd Division, Alsur Pettah.

Present.—Mr. S. V. Annaiyappa Chetti.
Absent.—Mr. P. Changalraya Modaliar.

4th Division, Nagarta Pettah.

Present.—Mr. Doddi Venkatramana Chetti.
Absent.—Mr. B. Narayan Chetti.

5th Division, Kalasi Palyam.

Present.—Mr. C. Muttusami Naidu.
Mr. M. Ramasami Chetti.

I. The usual monthly accounts for August 1880 are laid before the Board, read and duly passed.

Ordered.—That the following cash account be submitted to the Deputy Accountant General in Mysore.

Cash Account Current of the Municipal Commission for the Town of Bangalore for the month of August 1880.

Receipts.	Amount.			Expenditure.	Amount.		
Cash Balance brought forward from last month's account	3,793	11	8	I. Collection. 1. For octroi tax ...	478	7	10
I. Octroi. 2. Animals for slaughter ..	10	8	0	I. Collection. 2. For tax on houses, buildings and lands, and for tax on professions and trades	161	6	0
I. Octroi. 4. Building materials ...	5	11	9	I. Collection. 7. Rents assigned to Municipality ...	20	8	6
I. Octroi. 6. Tobacco, betel-leaf and betel-nuts ...	1,463	9	6	II. Head Office charges ...	409	15	6
I. Octroi. Arrears of octroi recovered from late octroi contractors ...	66	10	8	III. Public Works. 1. Supervision ...	147	9	0
I. Octroi. Tax on dry and green cocoanuts ...	341	5	6	III. Public Works. 2. *a.* Original works ...	1,236	0	2
II. Mohatarfa and Municipal taxes on houses, buildings or lands ...	419	5	8	III. Public Works. 3. Repairs ...	410	15	10
III. Mohatarfa tax on professions and trades...	60	12	0	IV. Police	1,380	3	3
VII. Rents.—2. Nazul shops (Market) ...	105	10	4	VI. Charitable grants 2. Vaccination ...	20	8	0
IX. Extraordinary.— 5. Other Items. (Tobacco license) ..	17	4	0	VII. Conservancy	846	15	8
X. Fines	53	4	8	VIII. Road watering	30	0	0
XI. Pounds	30	15	2	IX. Lighting	189	0	6
XII. Miscellaneous	667	7	0	X. Gardens ... 1. Public Garden ...	17	6	0
XIII. Fees from liquor licenses ...	281	6	8	XII. Miscellaneous 2. Refund of excess collections ...	10	0	0
				XII. Miscellaneous 3. Cattle Pound charges	21	14	6
				XII. Miscellaneous 4. Statistics and mortuary registration ...	32	5	0
				XII. Miscellaneous 5. Other miscellaneous items ...	92	6	6
				XIII. Extraordinary. P. W. Reserve ...	51	14	0
				Total Rupees.....	5,557	8	3
				To Cash Balance carried to next month's accounts.....	1,760	2	4
Grand Total Rs.....	7,317	10	7	Grand Total Rs.....	7,317	10	7

368

Mortuary Register, Bangalore.

Statement of Births and Deaths within the Town Municipal limits during the month of August 1880.

Causes of Death.	Europeans.		East Indians.		Musalmáns.		Hindus.		Native Christians.		Buddhists.		Other Classes.		Total.		Total in—		Difference.	
	M.	F.	M.	F.	M.	F.	M.	F.	M.	F.	M.	F.	M.	F.	M.	F.	August 1880.	July 1880.	Increase.	Decrease.
Cholera ...	...	...	...	...	...	...	...	...	...	...	...	...	...	...	...	...	...	...	...	...
Small-pox ...	...	...	...	...	...	...	...	...	...	...	...	...	...	...	...	...	...	...	...	...
Fevers ...	...	...	...	...	6	6	14	10	1	...	...	...	...	...	21	16	37	47	...	10
Bowel-complaints ...	...	...	...	...	1	...	3	2	...	...	...	...	...	...	4	2	6	7	...	1
Injuries. Suicide ...	...	...	...	...	1	...	...	...	...	...	...	...	...	...	1	...	1	...	1	...
Injuries. Wounding ...	...	...	...	...	...	...	...	...	...	...	...	...	...	...	...	...	...	...	...	...
Injuries. Accident ...	...	...	...	...	1	...	...	2	...	...	...	...	...	...	1	2	3	...	3	...
Injuries. Snake-bite or killed by wild beasts. ...	...	...	...	...	...	...	...	...	...	...	...	...	...	...	...	...	...	...	...	...
Other Causes—																				
Consumption ...	...	...	...	...	2	...	4	6	...	...	...	...	...	...	6	6	12	8	4	...
Convulsion ...	...	...	...	...	...	1	2	1	...	...	...	...	...	...	2	2	4	3	1	...
Dropsy ...	...	...	...	...	...	...	...	1	...	...	...	...	...	...	...	1	1	1	...	...
Lock-jaw ...	...	...	...	...	...	1	...	1	...	...	...	...	...	...	...	2	2	1	1	...
Asthma ...	...	...	...	...	...	1	2	2	...	1	...	...	...	...	2	4	6	2	4	...
Rheumatism ...	...	...	...	...	...	...	1	2	...	...	...	...	...	...	1	2	3	2	1	...
Old-age ...	...	...	...	...	...	...	3	5	...	...	...	...	...	...	3	5	8	4	4	...
Croup ..	...	...	...	...	...	...	8	3	...	...	...	...	...	...	8	3	11	6	5	...
Total Other Causes...	...	...	...	...	2	3	20	21	...	1	...	...	...	...	22	25	47	27	20	...
Total Deaths...	...	...	...	...	11	9	37	35	1	1	...	...	...	...	49	45	94	81	24	11
Total Number of Births during the month ...	...	...	...	...	10	9	42	50	...	1	...	...	...	...	52	60	112	88	24	...

369

Abstract of Mortuary Report and Percentage of Births and Deaths on the estimated Population, 58,573.

Classes.	Births.		Difference.		Percentage of Births.		Deaths.		Difference.		Percentage of Deaths.	
	July 1880.	August 1880.	Increase.	Decrease.	July 1880.	August 1880.	July 1880.	August 1880.	Increase.	Decrease.	July 1880.	August 1880.
Europeans ...	...	...	...	...	...	...	...	...	...	...	...	...
East Indians ...	...	...	...	...	...	...	...	...	...	...	...	...
Musalmáns ...	16	19	3	...	·24	·29	16	20	4	...	·24	·308
Hindus ...	72	92	20	...	·14	·17	65	72	7	...	·12	·14
Native Christians	...	1	1	..	...	...	...	2	...	...	...	·307
Buddhists ...	...	...	...	...	...	...	...	...	...	...	...	...
Other Classes ...	...	...	...	...	...	...	...	...	...	...	...	...
Total.....	88	112	24	...	·15	·19	81	94	11	...	·14	·16

REMARKS.

There were 94 deaths during the month; 37 from fever, 6 from bowel-complaints, 4 from injuries, and 47 from other causes as detailed in the previous page.

The number of deaths in August 1880, as compared with those of July 1880, are as follows:—

Of Musalmáns 20 against 16, Hindus 72 against 65, Native Christians 2 against none, being 13 more than the previous month and 3 above the total number of deaths registered in the corresponding month of last year.

Age.

Classes.	Number died during the month.	Born dead.	Under 1 year.	2 to 5 years.	6 to 12 do	12 to 20 inclusive.	21 to 30 do	31 to 40 do	41 to 50 do	51 to 60 do	Above 60.	Total.
Europeans ...	...	...	...	...	...	...	...	...	...	...	...	...
East Indians ...	...	...	...	...	...	...	...	...	...	...	...	...
Musalmáns ...	20	...	3	4	1	1	3	1	2	1	4	20
Hindus ...	72	...	17	2	6	3	16	4	10	3	11	72
Native Christians ...	2	...	...	...	...	1	...	...	...	1	...	2
Buddhists ...	...	...	...	...	...	...	...	...	...	...	...	...
Other Classes ...	...	...	...	...	...	...	...	...	...	...	...	...
Total.....	94	...	20	6	7	5	19	5	12		15	94

Resolution.—Approved.

II. Proceedings of the Chief Commissioner of Mysore, No. 3067—P. 328, dated 23rd August 1880, and order thereon regarding the separation of house tax from trade tax.

Resolution.—To be recorded.

III. Application from Mr. Shama Rao, Amildar, applying for the site situated immediately to the south of Chikka Pettah Karanji, dated 10th September 1880.

Resolution.—As the possession by the Municipality of the ground applied for is disputed by the trustees of the Uttaraji Matt, the application cannot be taken into consideration for the present. The party or parties laying claim to the ground to be served with a notice directing them to establish their right to the property in question within a given period.

IV. Application from Puttanna Chetti applying for a piece of site adjoining his chattram situated near Balé Bágal, together with Mr. B. Murry Gungiah's report thereon dated 6th September 1880.

Resolution.—The Commissioners decline to sanction the free grant of the ground applied for, but resolve that the same be sold to applicant as a special case at the rate of Re. 1 per ankanam.

V. The consideration of tenders received for the lighting of the Town.

Resolved.—That the consideration of this question be deferred till the next meeting of the Board when the Commissioners will be able to have before them the final resolution passed by the Cantonment Municipality on the subject.

J. H. ORR,
President, Town Munl. Commn.

NUNDYDROOG DIVISION.

NOTIFICATION.

The 28th October 1880.

Sessions for the Kolar District will be held at Kolar on Monday the 8th November 1880 and following days:—

The cases mentioned below are posted for trial:—

Magisterial No.	Sessions No.	Names of Prisoners.	Name of the Committing Magistrate.	Sections charged under—	Date of Committal.
41 of 1880.	13	Kondappa	Mr. A. Rangasamaiengar, Subordinate Judge and 1st Class Magistrate.	498, and 497, I. P. C.	26th October 1880.
43 of 1880.	14	Basamma	Do.	307, I. P. C.	28th do

The Magistrates above named are hereby directed to cause all parties connected with the above noted cases to be in attendance at Kolar before the Sessions Court on Monday the 8th November 1880, at 11 A. M.

All cases committed prior to that date will be taken up for trial in addition to the above.

IN THE COURT OF THE DISTRICT JUDGE, NUNDYDROOG DIVISION.

Application No. 370 *of* 1880.

Mr. John Joseph Roberts, a Coffee Planter residing at Kalliand Estate at Gudalore in the Wynad .. .. *Applicant.*

In the matter of the estate of the late Mrs. A. Jane Roberts, late of Bangalore.

Whereas Mr. John Joseph Roberts, 2nd son of the deceased above named, has applied to this Court for letters of administration with will of the said deceased who died at Bangalore on the 15th September 1880, and 19th day of November 1880 at 10 A. M. has been fixed for the hearing of the application.

All persons claiming to have any interest in the estate of the deceased are hereby called upon to come and see the proceedings on or before the said 19th day of November 1880.

Given under my hand and the seal of the Court this 21st day of October 1880.

T. R. A. THUMBOO CHETTY,
District & Sessions Judge.

BANGALORE DISTRICT.

NOTIFICATION.

The 9th October 1880.

Descriptive roll of a female convict escaped from the Female Wards on the night of Friday the 8th October 1880.

Jail No.—4759. *Name and Father's Name*—Muni, daughter of Venkatappa. *Place of Residence*—Shrinivaspur Kasba, Kolar District. *Caste and Profession*—Gollar, cooly. *Age and Height*—24 years, 5 feet. *Crime, date and period of Sentence*—Theft in a building and being an old offender, 2 years and 6 months, from 24th May 1880.—*Awarding Court*—1st Class Magistrate, Kolar District. *Descriptive marks*—A small scar near the inner end of right collar-bone. *Particulars of Jail Clothing, &c.*—1 re-committal cloth of black and yellow color and 1 white jacket marked with jail numbers. *Remarks*—A reward of 25 rupees is offered for her re-capture.

J. HENDERSON, M. D.,
Supt., Central Jail.

KOLAR DISTRICT.

NOTICE UNDER SECTION 354 OF THE CODE OF CIVIL PROCEDURE.

The 18th February 1880.

It is hereby declared that the undermentioned person is an insolvent and as such entitled to the benefit of the provisions of Chapter XX of the Code of Civil Procedure, and it is ordered that the said insolvent be and is hereby discharged from custody and from all liability to be arrested or imprisoned in respect of any of the debts mentioned in the schedule filed with the records of the case concerned.

Krishnma Char of Mulbagal. In Insolvent Case No. 2 of 1880.

NOTICE UNDER SECTION 354 OF THE CODE OF CIVIL PROCEDURE.

The 28th June 1880.

It is hereby declared that the undermentioned person is an insolvent and as such entitled to the benefit of the provisions of Chapter XX of the Code of Civil Procedure, and it is ordered that the said insolvent be and is hereby discharged from custody and from all liability to be arrested or imprisoned in respect of any of the debts mentioned in the schedule filed with the records of the case concerned.

Krishnaiengar, *alias* Shamanna of Kolar. In Insolvent Case No. 4 of 1880.

NOTICE UNDER SECTION 354 OF THE CODE OF CIVIL PROCEDURE.

The 18th August 1880.

It is hereby declared that the undermentioned person is an insolvent and as such entitled to the benefit of the provisions of Chapter XX of the Code of Civil Procedure, and it is ordered that the said insolvent be and is hereby discharged from custody and from all liability to be arrested or imprisoned in respect of any of the debts mentioned in the schedule filed with the records of the case concerned.

Bhima Rao of Betmangala. In Insolvent Case No. 6 of 1880.

NOTICE UNDER SECTION 354 OF THE CODE OF CIVIL PROCEDURE.

The 23rd August 1880.

It is hereby declared that the undermentioned person is an insolvent and as such entitled to the benefit of the provisions of Chapter XX of the Code of Civil Procedure, and it is ordered that the said insolvent be and is hereby discharged from custody and from all liability to be arrested or imprisoned in respect of any of the debts mentioned in the schedule filed with the records of the case concerned.

Srinivas Rao of Shrinivaspur. In Insolvent Case No. 5 of 1880.

NOTICE UNDER SECTION 354 OF THE CODE OF CIVIL PROCEDURE.

The 11th October 1880.

It is hereby declared that the undermentioned person is an insolvent and as such entitled to the benefit of the provisions of Chapter XX of the Code of Civil Procedure, and it is ordered that the said insolvent be and is hereby discharged from custody and from all liability to be arrested or imprisoned in respect of any of the debts mentioned in the schedule filed with the records of the case concerned.

Lingachari of Kolar. In Insolvent Case No. 9 of 1880.

A. RANGASAMAIENGAR,
Subordinate Judge.

TUMKUR DISTRICT.

NOTICE UNDER SECTION 354 OF THE CODE OF CIVIL PROCEDURE.

The 11th October 1880.

It is hereby declared that the undermentioned person is an insolvent and as such entitled to the benefit of the provisions of Chapter XX of the Code of Civil Procedure, and it is ordered that the said insolvent be and is hereby discharged from custody and from all liability to be arrested or imprisoned in respect of any of the debts mentioned in the schedule filed with the records of the case concerned.

Bandi Viranna of Túmkúr.. In Insolvent Case No. 11 of 1880.

E. CHITAMBRAM IYER,
Subordinate Judge.

MYSORE DISTRICT.

The 2nd October 1880.

Descriptive roll of a convict who escaped from a gang of prisoners working within the precincts of the Mysore Jail at about 6-30 A. M. on the 2nd October 1880.

Jail Register No.—8639. *Name and Father's Name*—Guruva *alias* Malla, son of Malla. *Place of Residence*—Sivaram Pettah, Mysore. *Caste and Profession*—Gollar, domestic servant. *Age and Height*—35 years, 5 feet 3¾ inches. *Crime and period of sentence*—Theft, 2 years' rigorous imprisonment from 9th August 1880. *Awarding Court*—Town Magistrate, Mysore, Case No. 269 of 1880. *Descriptive marks*—Color brown, scars on either temple and just above eye-brows, a scar on inner part of right thigh about the lower third, two vaccination marks on either arm, either big toe turned outwards a little and a scar just below navel. Has a fetter gall on his right leg. A reward of rupees twenty-five will be given for the prisoner's re-capture.

T. J McGANN,
Supt., Mysore Jail.

KADUR DISTRICT.

NOTIFICATION.

The 21st October 1880.

Notice is hereby given that the old travellers' bungalow at Yedahalli inclusive of the out-houses and of the compound containing some grafted mango trees, being Government property, will be sold by public auction on Thursday the 25th November 1880, before the Amildar at the spot. The property will be knocked down to the highest bidder subject to confirmation by the Deputy Commissioner. Such highest bidder to pay at once a deposit of 25 per cent of the amount offered, and the remainder of the amount after the sale is confirmed by the Deputy Commissioner. In default of either of these conditions the building will be sold again at the risk of the original purchaser.

For further particulars intending purchasers are requested to apply to the Amildar.

G. F. MEIKLEJOHN,
Offg. Dy. Commr.

SEASON REPORTS FOR THE MONTH OF SEPTEMBER 1880.

Kolar District.

Rain-fall.—The average rain-fall during the month was 2 inches and 59½ cents. Want of more rain was felt during the month.

Lands.—Lands assessed at Rs. 2,240—12—3 were taken up for cultivation, while none were relinquished.

Seeds sown—Horse-gram and inferior sesamum.

Crops—Were withering in some parts and doing well in others. But they are much improved ever since the recent rain-fall.

Crops harvested—Indian maize, potatoes, garlic, and irrigated ragi.

Health—Generally good.

Casualties among Cattle.—	In August.	In September.
Cows and bulls	1,537	1,517
Buffaloes	427	300
Sheep and goats	1,379	1,796
Horses	7	7
Asses	20	24
Total....	3,370	3,644

A. COOPOOSAWMY MODALIAR,
For Dy. Commr.

Mysore District.

Rain.—Rain fell generally: the total registered in the whole District aggregated 20 inches 5 cents.

Crops.—The prospects of crops good. Horse-gram, paddy, wheat, green and black gram were sown, and sugar-cane and sesamum were harvested; the former in the Ashtagram and the latter in the Periyapatna, Yedatore, Heggaddevankote and Gundlupet Taluks.

Health.—The public health has been good.

Cattle.—Murrain still prevalent and 496 head of cattle is said to have died from this and 972 from all other causes.

Prices.—Almost stationary.

C. J. PEARSE,
Dy. Commissioner.

Coorg.

Wet land.—The Kartika crop is thriving : ploughing for the Vaisaka crop has commenced.
Ragi.—Ragi is being reaped, but the harvest is small.
Cardamoms.—Cardamoms are being picked, and the yield is said to be good.
Coffee.—Coffee is ripening on some estates in South Coorg. Labor still scarce and prospects poor.
Mortality.—The number of deaths amongst the population of the Province in August was 412, against 324 in the same month of last year, and is classified as follows :—

Diarrhœa ..	17	*Taluks.*	
Fever	384	Mercara	77
Suicide.. ..	1	Padinalknad	86
Accidents ..	2	Yedenalknad	58
By wild beasts and snakes	2	Kiggatnad	61
Other diseases ..	12	Nanjarajpatna	69
		Yelsavirshime	41
		Towns.	
		Mahadeopet ..	3
		Virarajendrapet	17
Total..	412	Total ..	412

Of the above, there were 162 males, 111 females and 139 children of the following sects :—
Christians 6 ; Coorgs 78 ; Hindus 224 ; Muhammadans 21 ; Other classes 83 ; Total 412.
Cattle.—The mortality amongst the cattle in September was 282 against 889 in the same month of last year, and is classified as follows :—
Bulls 66 ; cows 62 ; calves 37 ; he-buffaloes 32 ; she-buffaloes 47 ; calves 38 ; total 282.
Market-rates.—Stationary.

Rain-fall.—Mercara—

	Inches.	Cents.
In September 1880.. ..	10	67
Total Rain-fall	118	95
Somavarpet—		
In September 1880 ..	5	54
Total Rain-fall	88	21

H. G. THOMSON, *Superintendent.*

Abstract of Meteorological Reports received from Head-Quarters of Districts in the Province of Mysore, from 1st to 15th October 1880.

DISTRICT.	Thermometer. Averages for the haf month. 9-30 A. M. Dry bulb.	Wet bulb.	Differ-ence.	3-30 P. M. Dry bulb.	Wet bulb.	Differ-ence.	Thermometer. Maximum.	Minimum.	Rain. Inches.	Cents.	Wind.
Kolar	75	...	...	78	...	...	73	67	1	30	N. E.
Túmkúr ...	78	66	12	87	76	11	68	62	1	86	N. E. & E.
Mysore*... ...	...	...	...	...	...	...	...	...	...	...	...
Hassan	65	34	31	74	41	33	82	64	6	45	S. W.
Shimoga ...	78	...	...	81	...	...	..	...	..	55	...
Kadur ...	75	67	...	78	67	...	81	61	3	59	N. E. & S. W.
Chitaldroog ...	75	...	...	78	...	...	...	...	2	72	S. W. & S. S. W

*Information not received.

Mysore Government Press, Bangalore.—1880.

375

THE

MYSORE GAZETTE.

Published by Authority.

BANGALORE, SATURDAY, NOVEMBER 6, 1880.

☞ Separate paging is given to this Part in order that it may be filed as a separate compilation.

PART II.

Notifications by the Judicial Commissioner, &c.

JUDICIAL DEPARTMENT.

NOTIFICATION.

The 29th October 1880.

The undermentioned person has been enrolled as 2nd Grade Pleader in the Courts of Coorg, under the Rules of 23rd December 1879 :—

9. Fraserpet Samaiya .. In the Courts of the Parpattegars and Subedars in Coorg.

J. D. SANDFORD,
Judicial Commissioner.

REVENUE SURVEY AND SETTLEMENT DEPT.

No. 897. *The 2nd November* 1880.

Mr. A. G. Hudson, Assistant Superintendent, Mysore Revenue Survey, availed himself of, and returned to duty from, the one month's privilege leave granted him in Chief Commissioner's Notification No. 98 of the 10th September 1880, published in the *Mysore Gazette* of the 18th idem, on the forenoon of the 25th September 1880, and 20th October 1880, respectively.

W. C. ANDERSON,
Survey and Sett. Commr.

INAM DEPARTMENT.

NOTIFICATIONS.

No. 7. *The 13th October* 1880.

Inamdars are hereby informed that 11 *ad-interim* certificates for whole villages and 470 *ad-interim* extracts, &c., for the minor inams situated in the marginally noted taluks were forwarded to the Deputy Commissioners of the Bangalore, Kolar, Hassan and Kadur Districts, on the 13th October 1880, for distribution. They are accordingly to appear to receive the same on receipt of individual notices from the Amildars of the aforesaid taluks, who are hereby instructed to issue such notices without delay.

Dodballapur.	Attikuppa.
Closepet.	Belur.
Shrinivaspur.	Chennaraypatna.
Sidlaghatta.	Nagamangala.
Malur.	Haranhalli.
Gumnayakanpálya.	Narsipur.
Hassan.	Múdgere.
Arkalgúd.	

No. 8. *The* 13*th October* 1880.

Inamdars are hereby informed that 42 final title-deeds for whole inam villages and 10 title-deeds for minor inams situated in the marginally noted taluks were forwarded to the Deputy Commissioners of the Túmkúr, Kadur and Hassan Districts, on the 13th October 1880, for distribution. They are accordingly to appear to receive the same on receipt of individual notices from the Amildars of the aforesaid taluks, who are hereby instructed to issue such notices without delay.

Túmkúr.	Maddagiri.
Kunigal.	Chikmagalur.
Kadaba.	Belur.

The *ad-interim* certificates issued already for the above inam villages and minor inams are hereby declared to be cancelled.

R. A. COLE,
Supt. of Inam Settlements.

FINANCIAL DEPARTMENT.

Statement of Local Cesses realized and allotted to Local Funds from 1st October 1879 to 31st March 1880.

No. I.—Local Cess levied on Land Revenue Collections.

Names of Districts.	One Anna in Surveyed Taluks.									Half Anna in Unsurveyed Taluks.								
	Amount of Cess.			76 per cent allotted to District Funds.			24 per cent allotted to Village School Funds.			Amount of Cess.			76 per cent allotted to District Funds.			24 per cent allotted to Village School Funds.		
Bangalore ...	37,375	8	3	28,405	6	3	8,970	2	0	13,073	3	5	9,935	10	3	3,137	9	2
Kolar ...	45,118	9	5	34,290	2	0	10,828	7	5	3,299	11	7	2,507	12	8	791	14	11
Túmkúr ...	47,674	9	2½	36,232	10	10	11,441	14	4½	5,693	14	9	4,327	6	1	1,366	8	8
Shimoga ...	79,452	12	4	60,384	1	8	19,068	10	8	...	...	...	...	...	...	...	...	...
Kadur ...	38,474	14	3	29,240	14	8	9,233	15	7	433	3	5	329	3	11	103	15	6
Chitaldroog ...	35,268	10	6	26,804	2	10	8,464	7	8	...	...	...	...	...	...	...	...	...
Mysore ...	4,753	12	4	3,612	13	10	1,140	14	6	47,720	10	10	36,267	11	5	11,452	15	5
Hassan ...	5,645	11	0	4,290	11	7	1,354	15	5	39,019	3	11	29,654	10	0	9,364	9	11
Total.....	2,93,764	7	3½	2,23,260	15	8	70,503	7	7½	1,09,239	15	11	83,022	6	4	26,217	9	7

No. II.—Local Cess levied on Abkari and Sayer Excise.

Names of Districts.	One Anna in Surveyed Taluks.															Half Anna in Unsurveyed Taluks.												
	Abkari.			Supari.			Total Cess.			76 per cent allotted to Local Funds General.			24 per cent allotted to Village School Funds.			Abkari.			Supari.			Total Cess.			76 per cent allotted to Local Funds General.			24 per cent allotted to Village School Funds.		
Bangalore ...	10,770	14	6	2	13	10	10,773	12	4	8,183	1	1	2,585	11	3	20	4	0	0	12	2	21	0	2	15	15	6	5	0	8
Kolar ...	692	11	4	2	2	3	694	13	7	528	1	4	166	12	3	0	0	0	2	9	8	2	9	8	1	15	8	0	10	0
Túmkúr ...	1,010	2	6	799	0	5	1,809	2	11	1,374	15	8	434	3	3	0	0	0	5	6	1	5	6	1	4	1	5	1	4	8
Shimoga ...	1,076	6	2	0	0	0	1,076	6	2	818	0	10	258	5	4	0	0	0	0	0	0	0	0	0	0	0	0	0	0	0
Kadur ...	1,144	3	1	0	0	0	1,144	3	1	869	9	5	274	9	8	206	10	4	0	0	0	206	10	4	157	0	10	49	9	6
Chitaldroog ...	1,032	14	3	427	1	7	1,459	15	10	1,109	9	6	350	6	4	0	0	0	0	0	0	0	0	0	0	0	0	0	0	0
Mysore ...	0	0	0	0	0	0	0	0	0	0	0	0	0	0	0	4,931	8	0	86	5	2	5,017	13	2	3,813	8	9	1,204	4	5
Hassan ...	346	9	5	35	2	2	381	11	7	290	1	9	91	9	10	240	12	3	22	6	9	263	3	0	200	0	4	63	2	8
Total.....	16,073	13	3	1,266	4	3	17,340	1	6	13,178	7	7	4,161	9	11	5,399	2	7	117	7	10	5,516	10	5	4,192	10	6	1,323	15	11

3.77

No. III.—Local Cess levied on Sayer Collections.

Names of Districts.	One Anna in Surveyed Taluks.																		Half Anna in Unsurveyed Taluks.																	
	Coffee.			Cardamom.			Supari.			Total Cess.			76 per cent allotted to District Funds.			24 per cent allotted to Village School Funds.			Coffee.			Cardamom.			Supari.			Total Cess.			76 per cent allotted to District Funds.			24 per cent allotted to Village School Funds.		
Shimoga ...	9	1	0	48	3	6	8,517	0	10	8,574	5	4	6,516	7	11	2,057	13	5	0	0	0	0	0	0	0	0	0	0	0	0	0	0	0	0	0	0
Kadur ...	712	11	9	106	2	4	3,056	15	10	3,875	13	11	2,945	10	7	930	3	4	34	13	0	0	4	3	32	14	0	67	15	3	51	10	4	16	4	11
Hassan ...	455	15	7	0	0	0	0	0	0	455	15	7	346	8	8	109	6	11	0	12	10	0	0	0	0	0	0	0	12	10	0	9	9	0	3	1
Total.....	1,177	12	4	154	5	10	11,574	0	8	12,906	2	10	9,808	11	2	3,097	7	8	35	9	10	0	4	3	32	14	0	68	12	1	52	4	1	16	8	0

No. IV.—Local Cess under Miscellaneous Heads of Revenue.

Names of Districts.	One Anna in Surveyed Taluks.									Half Anna in Unsurveyed Taluks.								
	Amount of Cess.			76 per cent allotted to Local Funds General.			24 per cent allotted to Village School Funds.			Amount of Cess.			76 per cent allotted to Local Funds General.			24 per cent allotted to Village School Funds.		
Bangalore	233	15	11	177	13	5	56	2	6	342	3	4	260	1	3	82	2	1
Kolar	248	6	11	188	12	11	59	10	0	56	0	5	42	9	3	13	7	2
Túmkúr	305	11	0	232	5	2	73	5	10	24	1	1	18	4	8	5	12	5
Shimoga	603	6	9	458	9	7	144	13	2	0	0	0	0	0	0	0	0	0
Kadur	551	8	3	419	2	5	132	5	10	21	7	5	16	5	0	5	2	5
Chitaldroog	365	12	4	277	15	9	87	12	7	0	0	0	0	0	0	0	0	0
Mysore	0	0	0	0	0	0	0	0	0	5,641	3	10	4,287	5	6	1,353	14	4
Hassan	342	14	1	260	9	5	82	4	8	116	3	11	88	5	6	27	14	5
Total.....	2,651	11	3	2,015	4	8	636	6	7	6,201	4	0	4,712	15	2	1,488	4	10

No. V.—Abstract of Credits to Funds for the Half-year ending 31st March 1880.

Names of Districts.	District Funds.			Village School Funds.			Local Funds General.		
Bangalore	38,341	0	6	14,836	11	8	8,641	15	3
Kolar	36,797	14	8	11,860	13	9	761	7	2
Túmkúr	40,560	0	11	13,323	1	2½	1,629	10	11
Shimoga	66,900	9	7	21,529	10	7	1,276	10	5
Kadur	32,567	7	6	10,746	2	9	1,462	1	8
Chitaldroog	26,804	2	10	8,902	10	7	1,387	9	3
Mysore	39,880	9	3	15,152	0	8	8,100	14	3
Hassan	34,292	8	0	11,094	2	11	839	1	0
Total.....	3,16,144	5	3	1,07,445	6	1½	24,099	5	11

H. HUDSON,
Dy. Acctt. General in Mysore.

REGISTRATION DEPARTMENT.

REGISTRATION IN MYSORE OF DOCUMENTS RELATING TO PROPERTY PARTLY IN MYSORE AND PARTLY IN BRITISH INDIA.

To—The Registering Officers in Mysore, Circular No. 13 *of* 1880—81, *dated 4th November* 1880.

Under orders of the Chief Commissioner of Mysore, dated the 22nd October 1880, the Inspector General of Registration has the honor to instruct Registrars and Sub-Registrars in Mysore that they may continue to register documents relating to immovable property situated partly in Mysore and partly in British Territory ; but when delivering them after registry, the Registering Officer must warn the presenter in writing that he is instructed that the registration so made is valid only as regards the property in Mysore and is not valid as regards that in British India.

The fact of the warning being given should be noted in the register with the Registering Officer's isgnature.

No memorandum should be issued under Section 65 of the Registration Act III of 1877.

H. HUDSON,
Inspector General of Registration.

EDUCATIONAL DEPARTMENT.

MIDDLE SCHOOL EXAMINATION.

The 4th November 1880.

1. Candidates whose names have been registered for the approaching Middle School Examination to be held at Bangalore, Mysore, Shimoga, and Hassan are informed that the examination will commence on Wednesday, the 1st December, at 10 A M. precisely.

2. Candidates should present themselves at the Central College in Bangalore, the Maha Raja's College in Mysore, the Shimoga College and the Hassan High School respectively, at half past 9 A. M. each day.

The examination will be conducted in the order of time and subjects shewn below :—

Days.	Hours.		Subjects.
Wednesday, 1st December 1880.	10 — 1	...	Geography and Indian History.
Do do do.	2 — 4	...	Arithmetic.
Do do do.	4 — 4½	...	English Handwriting.
Thursday, 2nd December 1880.	10 — 12½	...	Translation, &c., and English Grammar.
Do do do.	12½ — 1	...	English Dictation.
Do do do.	2 — 4	...	Mathematics.
Do do do.	4 — 4½	...	Handwriting in Second Language.
Friday, 3rd December 1880.	10 — 12½	...	Second Language. Composition, Grammar, and Text Book.
Do do do.	12½ — 1	...	Do Dictation.
Do do do.	2 — 4	...	English History.
Saturday, 4th December 1880.	10 — 12...	...	Physical Geography.
Do do do.	2 — 4...	...	Physiology or Hygiene.
Monday, 6th December 1880.	10 — 12...	...	Political Economy.
Do do do.	2 — 4...	...	Agriculture.

3. Matriculates who have registered their names for examination in handwriting and candidates for the modified General Test, will have to appear on the days specified in the above table for examination in their respective subjects.

The attention of candidates is particularly called to the following rules :—

(1.) No candidate will be allowed to quit the Examination Room on any day until the expiration of half an hour from the time fixed for the commencement of the Examination, and candidates arriving after the expiration of that half hour will not be admitted.

(2.) No candidate will be allowed to re-enter the Examination Room, during the hour of Examination, after once quitting it, nor to leave the room without finally giving up his answer papers.

(3.) Any candidate detected in speaking to, or in any way communicating with, any other candidate, will be at once removed from the room, and the circumstance be reported to the Commissioner.

(4.) *No candidate will on any account be allowed to take into the Examination Room books or papers of any kind.* Any one detected with such in his possession, or having recourse to any unfair practices, will be removed from the room and the occurrence be reported to the Commissioner.

(5.) A candidate having completed his paper will rise from his seat and remain standing until the Superintendent takes his answer papers. Any candidate wishing to ask any question will pursue the same course, but will on no account leave his place.

(6.) Any paper sent up without the candidate's name and number affixed will not be examined.

(7.) Candidates will not be allowed to take any papers, except their question papers, out of the Examination Room.

(8.) Candidates are forbidden to tear up papers or to throw papers on the floor. All "spoilt copies, &c.," should be left on the desk where the candidate has been writing.

(9.) Candidates will be allowed to retain their question papers.

L. RICE,
Director of Public Instruction,
Mysore & Coorg.

NUNDYDROOG DIVISION.

IN THE COURT OF THE DISTRICT JUDGE, NUNDYDROOG DIVISION.

The 2nd November 1880.

In pursuance of orders of this Court made in the matter of the undermentioned insolvent debtors, it is ordered that the said debtors be declared insolvents under the provisions of Section 351, Chapter XX of the Code of Civil Procedure, in respect of all the debts mentioned in their schedules :—

No. of the Case.	Names of Insolvents.	Dates on which orders were passed.
Mis. 261 of 1880 ..	Alli Saib	2nd September 1880.
Mis. 264 do ..	B. J. Srinivasaiengar	10th do.
Mis. 266 do ..	Bora Chetti	13th do.
Mis. 267 do ..	Ummar Khan	1st do.
Mis. 275 do ..	Benne Krishnappa	10th do.

T. R. A. THUMBOO CHETTY,
District and Sessions Judge.

BANGALORE DISTRICT.

NOTIFICATION.

The 1st November 1880.

Notice is hereby given that sealed tenders will be received up to 1st December 1880, by the Superintendent of the Central Jail, for the supply by contract of all articles of diet, &c., required for the use of the prisoners confined in the Bangalore Central Jail and District Lock-up.

2. No tenders will be received after the date above mentioned.

3. Tenders to be superscribed "Tenders for the supply of provisions for the Central Jail and District Lock-up."

4. No tenders will be received unless accompanied by a deposit of Rs. 500 in cash or currency notes.

5. Tenders will be opened by the Superintendent, Central Jail, at his Office on the date above named, in the presence of such tenderers as may choose to attend.

6. All tenders must specify the rate at which the following articles can be supplied in pound weights per rupee :—

Rice, 1st and 2nd sort ..	Salt ..	Coffee ..
Ragi do ..	Curry-powder ..	Tea ..
Dál do ..	Onions ..	Bread ..
Ballar ..	Garlic ..	Milk ..
Meat ..	Vegetables ..	Soap-nut ..
Tyre ..	Firewood ..	Soap ..
Gingelly-oil ..	Gram ..	Marking-nut ..
Ghee ..	Soji ..	Pepper ..
Tamarind ..	Sugar ..	

7. The rates tendered must, besides the articles specified above, include lamp-oil, earthen plates, lotas, brooms, &c. The contractor will supply ragi grain to be ground by convicts, and it will be issued as flour. The supply will be calculated and payment made upon the quantity so issued at the price of ragi grain.

8. The probable requirements of the chief articles for the year will be (for 900 convicts on various scales) as under :—

Ragi	(lbs) ..	416,667	Gingelly-oil	(lbs) ..	2,833
Rice	,, ..	94,167	Salt	,, ..	12,500
Dál or ballar	,, ..	62,500	Curry-powder	,, ..	9,583
Vegetables	,, ..	125,000	Onions	,, ..	12,500
Meat	,, ..	28,333	Firewood	,, ..	500,000
Ghee	,, ..	2,833			

9. The Superintendent reserves to himself the right of rejecting any tender without assigning any reason for so doing.

10. The deposit of the successful competitor will be retained, and will be forfeited if he fails to execute the contract bond or to furnish security to the amount of Rs. 1,500 in cash or Government bonds within one week from the date of the acceptance of his contract being made known to him.

11. No advance of cash will be made to the contractor. Payments for the articles supplied will be made by the Superintendent, Central Jail, as soon as possible after the 1st of each month.

12. A store-room will be made over to the contractor in which he can keep all non-perishable articles. Perishable articles, such as meat, &c., must be at the Jail by 8 A. M. daily.

13. The contract must not be sublet.

14. A fine not exceeding Rs. 150 will be levied at the discretion of the Superintendent of the Central Jail for any infringement of the stipulation of the contract, or for the supply of any inferior articles, and if frequently violated, the contract may be annulled and the security confiscated to Government.

15. The decision of the Superintendent of the Central Jail to be final in all questions of infringement of contract.

16. The contractor will be bound to purchase vegetables from the jail garden for the use of the prisoners at the same rate as in the contract.

17. Any further information can be obtained by applying at the Superintendent's Office.

18. This contract will be subject to the confirmation of the Inspector General of Prisons in Mysore.

J. HENDERSON, M. D.,
Supt., Central Jail.

TUMKUR DISTRICT.

NOTIFICATION.

The 20th October 1880.

Notice is hereby given that the property consisting of gold and silver jewels, coins, &c., and enumerated in the appended list, and suspected to be stolen, is now in the District Magistrate's Court at Túmkúr. All persons having a claim to the aforesaid property are hereby required to appear before the said Court and establish the same within six months from this date; failing which, the said property will be forfeited to Government :—

No.	Particulars.	Weight if known.			Estimated Value.		
	Properties found in the house of Jangale Maraga and its neighbourhood.						
1	Brass mille (small tambal)	...	...	...	0	2	0
2	Cash found in do rupees	...	...	...	16	0	0
3	Silver ring of eleven flowers	2	0	0	2	0	0
4	Talisman (tayati) of jack fruit form	2	7	0	2	0	0
5	One gold fanam found in do	...	...	...	0	4	0
6	One Arcot fanam	...	...	...	0	1	0
7	Silver plate	15	0	0	15	0	0
8	Cash rupees	...	...	...	34	8	0
9	Gold beads and coral beads sewed in white thread in double rows with "Battu."	1	6	0	15	0	0
10	Do do in single row	0	10	0	5	0	0
11	Five earrings with pearls and rubies	...	...	...	3	0	0
12	A pair of earrings (jetti muru)	0	3	0	3	0	0
13	Two gold battus	0	1	0	1	0	0
14	One gold tali with blue beads	0	3	0	3	0	0
15	A bunch of 33 pearls, 2 gold beads, red stone (yamuna kallu) and 2 coral beads in gold wire...	...	...	...	2	0	0
16	A gold hair locket (chavarikattu)	4	2	0	15	0	0
17	Two silver baddus	6	0	0	5	0	0
18	One do bandi	7	0	0	7	0	0
19	One do girdle	3	14	0	3	0	0
20	One do bracelet (sarige)	1	2	0	1	0	0
21	One do talisman	1	0	0	1	0	0
22	Seven sewn bodices	...	...	...	7	0	0
23	Two Advani sádis	...	...	...	6	0	0
24	Two brass and copper small cases	...	...	...	0	6	0
	Articles pointed out by Jangale Ranga.						
25	Cash, rupees	...	...	...	99	0	0
26	A pair of woman's earrings with sarpani (vále)	1	14	0	25	0	0
27	One ear-pendant with a bunch of pearls	..	5	0	5	0	0
28	Soldered gold beads and single beads and a gold fanam with a talisman ...	1	4	0	21	0	0
29	Two coral beads	...	...	...	0	2	0
30	One gold necklace in 5 rows	7	2	0	100	0	0
31	Woman's earrings (vále) with sarpani	2	8	0	38	0	0
32	A pair of bracelets (girbale)	1	14	0	28	0	0

No.	Particulars.	Weight if known.			Estimated Value.		
33	Two "bugadi kayis"	0	4	0	4	0	0
34	One nose ring (nattu) with red stone	0	2	0	2	0	0
35	One necklace of solid beads in double rows, sewed in string	2	8	0	38	0	0
36	One necklace (nar addige)	1	2	0	15	0	0
37	Five addikes, not sewed	4	4	0	60	0	0
38	Two sovereigns	...	...	...	20	0	0
39	Three gold pagodas and 3 fanams	0	14	0	14	0	0
40	A head jewel (rakadi) broken	1	4	0	19	0	0
41	One silver talisman	5	0	0	5	0	0
42	Silver pieces with the words (Sriranganatha) inscribed on them	46	0	0	46	0	0
43	One leg ornament (kalsarpani)	36	0	0	36	0	0
44	Two copper cases in which jewels had been deposited	...	...	...	0	6	0
45	Two chambus	...	...	...	1	0	0
	Articles taken out of a basket by Jangale Perumal.						
46	Two pairs of bugadis with good pearls	3	8	0	32	0	0
47	One padaka with rubies and pearls	0	5	0	5	0	0
48	One pair of pearl earrings	0	1	0	3	0	0
49	Silver chain	0	8	0	0	8	0
50	Small pearls 7, green stones 4, red stones 12	...	...	..	0	8	0
51	A necklace of gold beads in double rows, sewed in string	1	6	0	18	0	0
52	Eight silver pieces	23	0	0	23	0	0
53	Cash, rupees and copper	..	...	...	10	15	0
54	A silver chain	1	9	0	1	0	0
55	Two necklaces of blue stones, sewed in silver wire	..	...	...	2	0	0
56	A necklace of coral beads, sewed in string	12	0	0	8	0	0
57	Gold métimuru or earring with pearl	0	12	0	11	0	0
58	Silver chain with flower	0	1	0	0	1	0
59	Earring, gold bead and white stone	0	1	0	0	2	0
60	One pair of woman's brass earrings (chandramuru) inlaid with glass ...	...	...	...	1	0	0
61	Six sewed bodices	...	...	...	0	4	0
62	An old copper chambu	...	...	...	0	12	0
	Property found in Jangale Timma's house.						
63	Silver hinged bangles	12	0	0	12	0	0
64	A leg ring (sarige)	2	8	0	2	0	0
65	Three silver bars	29	0	0	29	0	0
66	Three do small do	1	12	0	1	12	0
67	A silver girdle, double row	9	0	0	9	0	0
68	A silver tali, chain and an ordinary chain	9	0	0	9	0	0
69	A silver hair locket (chavari kattu)	1	4	0	1	4	0
70	A silver bracelet, 3 bells and 1 kondi	1	3	0	1	3	0
71	A broken gold nose jewel (múgabattu) and a eight coned bead	0	1	0	0	8	0
72	Red stones 12 and 1 green stone used for nattu	...	...	..	0	2	0
73	Old coins	...	...	...	9	9	0
74	A silver talisman in the shape of jack fruit	2	6	0	2	8	0
75	Four pearl earrings found in do	0	4	0	2	0	0
76	One pearl about the size of a Dál and 23 small ones	...	...	...	2	0	0
77	A gold ear-pendant with pearls	0	9	0	4	8	0
78	Twelve small pearls in wire	...	...	...	1	1	0
79	Fifty two pieces of gold necklace (addike)	4	4	0	52	0	0
80	A necklace of gold beads in double rows with 76 small beads, 2 large beads, a red tali, and 2 coral beads	1	15	0	18	0	0
81	One gold bead about the size of a Bengal-gram, 3 coral beads and a silver moon.	...	...	...	0	8	0
82	One common earring (métimurú)	0	5	0	2	8	0
83	One coral beads' necklace with 6 gooseberry beads, 13 small beads, one tali, 2 gold rings, one silver tali and 3 chains	13	0	0	10	0	0
84	One coral beads' necklace with 6 silver addikes				3	0	0
85	One coral beads' necklace with 2 silver talisman (tayati), tali and 1 bead ...				2	0	0
86	Two silver bracelets	0	14	0	0	14	0
87	One silver bar	1	2	0	1	2	0
87½	One silver sarige, 2 rings and 4 cobra heads (Nágara)	4	6	0	4	4	0

No.	Particulars.	Weight if known.			Estimated Value.		
	Properties shewn by Jangale Perumal on a second time.						
88	Cash, Rupees	...	...	...	60	0	0
89	One basket in which jewels had been deposited	...	...	...	0	1	0
	Properties found with Chikke Gauda, Patel of Yalenahalli of Honnavalli Taluk.						
90	One iron box	...	...	...	0	6	0
91	A small hand box with brass hinges and key	...	...	...	0	8	6
92	A necklace of blue beads in treble rows sewed in silver wire	...	.	...	0	8	0
93	One Dhoti of Bugadianchú, 11 cubits	—	...	...	0	8	0
94	Do do wide border	...	..	...	1	0	0
95	Do do of Kanguti	...	...	...	0	14	0
96	Nine gold fanams	...	...	...	4	8	0
97	One gold talekayi	0	5	...	2	8	0
98	Five silver pieces	1	8	...	1	8	0
99	Rudrakshi beads in wire	..	...	...	0	1	0
	Properties found with Alaga, Venkatrama and Govinda.						
100	Cash, Rupees...	...	...	...	105	0	0
101	Waist bells, sewed in string	6	8	0	6	8	0
102	A necklace of black beads (Karimani) with gold beads	1	0	0	5	0	0
103	One gold bead and a tali	0	2	0	0	12	0
104	One gondya	...	...	...	0	0	6
104½	One gold hair locket (chavrikattu)	2	8	0	10	0	0
	Articles of disguise belonging to Perumal.						
105	An old red turban	...	...	...	0	1	0
106	Do dupati	...	...	...	0	1	0
107	Do jolige	...	...	...	0	1	0
108	One Gurry (jhagate)	...	...	...	0	2	0
109	A pair of bronze tálas	...	...	...	0	2	0
110	One small bell...	...	...	...	0	1	0
111	One large do	...	...	...	0	2	0
112	One necklace of rudrakshi beads in four rows	...	...	...	0	2	0
113	Three necklaces of large do beads	...	...	...	0	3	0
	Properties found in Jangale Mara's house.						
114	One colored jubba (jacket)	...	...	...	0	1	0
115	One do turban	...	...	...	0	2	0
116	One necklace of tulasi beads in four rows sewed in silver wire	...	...	...	0	4	0
117	One necklace of rudrakshi beads in treble rows	...	...	...	0	4	0
118	One necklace of large rudrakshi beads	...	...	...	0	3	0
119	Four necklaces of small do beads in double rows	...	...	...	0	2	0
120	One necklace of do in treble rows	...	...	...	0	0	4
121	One hatchet with handle	...	...	...	0	4	0
122	One sword	...	...	...	0	6	0
123	Four small scythes	...	...	...	0	12	0
	Property found in Sanna Nanjá's house.						
124	Gold bars	37	8	0	454	0	0
	Property found with Sukúle Valaga.						
125	One silver armlet (double)	4	6	0	2	3	0
	Total.....				1,685	9	4

K. SESHADRI IYER,
District Magistrate.

MYSORE DISTRICT.

The 2nd October 1880.

Descriptive roll of a convict who escaped from a gang of prisoners working within the precincts of the Mysore Jail at about 6·30 A. M. on the 2nd October 1880.

Jail Register No.—8639. *Name and Father's Name*—Guruva *alias* Malla, son of Malla. *Place of Residence*—Sivaram Pettah, Mysore. *Caste and Profession*—Gollar, domestic servant. *Age and Height*—35 years, 5 feet 3¾ inches. *Crime and period of sentence*—Theft, 2 years' rigorous imprisonment from 9th August 1880. *Awarding Court*—Town Magistrate, Mysore, Case No. 269 of 1880. *Descriptive marks*—Color brown, scars on either temple and just above eye-brows, a scar on inner part of right thigh about the lower third, two vaccination marks on either arm, either big toe turned outwards a little and a scar just below navel. Has a fetter gall on his right leg. A reward of rupees twenty-five will be given for the prisoner's re-capture.

T. J MCGANN,
Supt., Mysore Jail.

KADUR DISTRICT.

NOTIFICATION.

The 21st October 1880.

Notice is hereby given that the old travellers' bungalow at Yedahalli inclusive of the out-houses and of the compound containing some grafted mango trees, being Government property, will be sold by public auction on Thursday the 25th November 1880, before the Amildar at the spot. The property will be knocked down to the highest bidder subject to confirmation by the Deputy Commissioner. Such highest bidder to pay at once a deposit of 25 per cent of the amount offered, and the remainder of the amount after the sale is confirmed by the Deputy Commissioner. In default of either of these conditions the building will be sold again at the risk of the original purchaser.

For further particulars intending purchasers are requested to apply to the Amildar.

G. F. MEIKLEJOHN,
Offg. Dy. Commr.

Visitors to the Mysore Government Museum, Bangalore, during the month of October 1880, *were* 56,267 *in number, averaging, exclusive of Sundays and holidays,* 2,345 *daily.*

Signatures made in—								Total of Signatures.		Unable to sign but tally kept.	Total of Visitors.	Unable to sign in No. of—		Total of Visitors.
English.														
Europeans.	Natives.	Tamil.	Telugu.	Kanarese.	Hindustani.	Mahratta.	Guzarati.	Males.	Females.			Men and Boys.	Women and Girls.	
253	460	519	157	1,447	171	149	4	3,025	135	53,107	56,267	26,750	26,357	56,267

J. HOUSTON, M. D.,
Supt., Mysore Govt. Museum.

COMMISSARIAT DEPARTMENT.

ADVERTISEMENTS.

The 29th October 1880.

Sealed tenders in the form used in the Commissariat Department will be received by the Executive Commissariat Officer for the supplies entered in the subjoined schedule up to 1 o'clock on the 14th December 1880, and the tenders will be opened at that hour in presence of those interested who choose to attend.

Tender forms and particulars regarding the contract, and the form of contract, can be obtained on application to the Executive Commissariat Officer, Bangalore.

Articles.	Probable Quantity.	Date of Delivery.	To Whom and Place.	Deposit to accompany Tenders.
Kulthi of good quality thoroughly cleaned and free from dirt and admixture with other grain .. lbs	3,314,565	To be supplied daily to the Mounted Corps and also for the use of the Public Cattle from 1st April 1881 to 31st March 1882 in such quantities as may be required.	At the different Gram Godowns or Horse Lines of the Mounted Corps at such time as may be fixed by the Officer Commanding, and also at the Public Cattle Lines at such time as may be fixed by the Commissariat Officer at Bangalore. A stock calculated for 3 months, 828,640 lbs, may be lodged in the Commissariat Godowns as security in lieu of cash. This stock cannot be withdrawn without the consent of the Commissariat Officer.	Rs. 3,685
Salt .. lbs	1,565			5

The 29th October 1880.

Sealed tenders in the form used in the Commissariat Department will be received by the Executive Commissariat Officer for the supplies entered in the subjoined schedule up to 1 o'clock on the 18th December 1880, and the tenders will be opened at that hour in presence of those interested who choose to attend.

Tender forms and particulars regarding the contract, and the form of contract, can be obtained on application to the Executive Commissariat Officer, Bangalore.

Articles.	Probable Quantity.	Date of Delivery.	To Whom and Place.	Deposit to accompany Tenders.
For Mounted Corps, straw, paddy, of best quality lbs	632,800	From 1st April 1881 and the straw should be supplied and stocked by the contractor before the 1st July 1881.	At the Horse Lines of H. M.s' 14th Hussars, B. By. B. Brig. R. H. Ay. 13rd Brig. R. Ay., K. 6th Brig. R. Ay.	Rs. 135
For Public Cattle, straw paddy of best quality lbs	1,451,970	From 1st April 1881 and the straw to be supplied and stocked by the contractor by the 1st July 1881.	At the Public Cattle Lines to the Officer in charge.	305
Straw, ragi, of best quality ,,	1,359,630			285
Green grass for mules ,,	941,700	From 1st April 1881 daily 2,580 lbs. or more.	Do	185

The 29th October 1880.

Sealed tenders in the form used in the Commissariat Department will be received by the Executive Commissariat Officer for the supplies entered in the subjoined schedule up to 1 o'clock on the 7th December 1880, and the tenders will be opened at that hour in presence of those interested who choose to attend.

Tender forms and particulars regarding the contract, and the form of contract, can be obtained on application to the Executive Commissariat Officer, Bangalore.

Articles.	Probable Quantity.	Date of Delivery.	To Whom and Place.	Deposit to accompany Tenders.
Provisions for Europeans.				Rs.
Beef, grass fed, 1st sort lbs	304,200	Daily in such quantities as may be required from 1st April 1881 to 31st March 1882.	To the European Troops at the different ration stands daily at 6 A. M.	980
Mutton, grass fed, 1st sort, carcases not to weigh less than 24 lbs The meat will be cut up into joints and those parts of the animals such as the ribs and upper joints of the legs as are more than ⅔rd bone will be excluded from the ration.	122,850			690
Coffee cleaned, 1st sort as per sample.	19,120			350
Rice, boiled, 1st sort as per sample.	106,760			220
Sugar, brown ,, ,,	66,727			275
Salt country ,, ,,	17,794			40
Vegetables, first sort, of the several kinds procurable in the local markets in the different seasons of the year, the proportion and description of each kind to be subject to wishes of the troops.	213,525			225
Potatoes, first sort, none to weigh less than 2 ozs.	213,525			370
Firewood dry in billets not exceeding 18 inches in length and 2 inches in thickness.	1,281,150			285

The beef and mutton contractors will be required to slaughter all animals at the Government slaughter shed and a fee of (3) annas per head for each bullock and (1) anna for each sheep will be levied daily from the contractors.

By Order of the Commissary General,

B. W. MAGRATH, *Colonel,*
Asstt. Commissary General.

Mysore Government Press, Bangalore.—1880.

THE

MYSORE GAZETTE.

Published by Authority.

387

BANGALORE, SATURDAY, NOVEMBER 13, 1880.

☞ Separate paging is given to this Part in order that it may be filed as a separate compilation.

PART II.

Notifications by the Judicial Commissioner, &c.

JUDICIAL DEPARTMENT.

NOTIFICATIONS.

The 6th November 1880.

The undermentioned person has been enrolled as 2nd Grade Pleader in the Courts of Mysore, under the Rules of 18th February 1879 :—

205. P. V. Raghavachari, .. Proposing to practise in the Courts of the Ashtagram Division.

The 8th November 1880.

The undermentioned gentleman has been enrolled as 1st Grade Pleader in the Courts of Coorg, under the Rules of 23rd December 1879 :—

Mr. M. A. Krishnaiengar.

J. D. SANDFORD,
Judicial Commissioner.

INAM DEPARTMENT.

NOTIFICATION.

No. 8. *The 13th October* 1880.

Inamdars are hereby informed that 42 final title-deeds for whole inam villages and 10 title-deeds for minor inams situated in the marginally noted taluks were forwarded to the Deputy Commissioners of the Túmkúr, Kadur and Hassan Districts, on the 13th October 1880, for distribution. They are accordingly to appear to receive the same on receipt of individual notices from the Amildars of the aforesaid taluks, who are hereby instructed to issue such notices without delay.

Túmkúr.	Maddagiri.
Kunigal.	Chikmagalur.
Kadaba.	Belur.

The *ad-interim* certificates issued already for the above inam villages and minor inams are hereby declared to be cancelled.

R. A. COLE,
Supt. of Inam Settlements.

EDUCATIONAL DEPARTMENT.

MIDDLE SCHOOL EXAMINATION.

The 4th November 1880.

1. Candidates whose names have been registered for the approaching Middle School Examination to be held at Bangalore, Mysore, Shimoga, and Hassan are informed that the examination will commence on Wednesday, the 1st December, at 10 A. M. precisely.

2. Candidates should present themselves at the Central College in Bangalore, the Maha Raja's College in Mysore, the Shimoga College and the Hassan High School respectively, at half past 9 A. M. each day.

The examination will be conducted in the order of time and subjects shewn below :—

Days.	Hours.	Subjects.
Wednesday, 1st December 1880.	10 — 1 ...	Geography and Indian History.
Do do do.	2 — 4 ...	Arithmetic.
Do do do.	4 — 4½ ...	English Handwriting.
Thursday, 2nd December 1880.	10 — 12½ ...	Translation, &c., and English Grammar.
Do do do.	12½ — 1 ...	English Dictation.
Do do do.	2 — 4 ...	Mathematics.
Do do do.	4 — 4½ ...	Handwriting in Second Language.
Friday, 3rd December 1880.	10 — 12½ ...	Second Language. Composition, Grammar, and Text Book.
Do do do.	12½ — 1 ...	Do Dictation.
Do do do.	2 — 4 ...	English History.
Saturday, 4th December 1880.	10 — 12... ...	Physical Geography.
Do do do.	2 — 4... ...	Physiology or Hygiene.
Monday, 6th December 1880.	10 — 12... ...	Political Economy.
Do do do.	2 — 4... ...	Agriculture.

3. Matriculates who have registered their names for examination in handwriting and candidates for the modified General Test, will have to appear on the days specified in the above table for examination in their respective subjects.

The attention of candidates is particularly called to the following rules :—

(1.) No candidate will be allowed to quit the Examination Room on any day until the expiration of half an hour from the time fixed for the commencement of the Examination, and candidates arriving after the expiration of that half hour will not be admitted.

(2.) No candidate will be allowed to re-enter the Examination Room, during the hour of Examination, after once quitting it, nor to leave the room without finally giving up his answer papers.

(3.) Any candidate detected in speaking to, or in any way communicating with, any other candidate, will be at once removed from the room, and the circumstance be reported to the Commissioner.

(4.) *No candidate will on any account be allowed to take into the Examination Room books or papers of any kind.* Any one detected with such in his possession, or having recourse to any unfair practices, will be removed from the room and the occurrence be reported to the Commissioner.

(5.) A candidate having completed his paper will rise from his seat and remain standing until the Superintendent takes his answer papers. Any candidate wishing to ask any question will pursue the same course, but will on no account leave his place.

(6.) Any paper sent up without the candidate's name and number affixed will not be examined.

(7.) Candidates will not be allowed to take any papers, except their question papers, out of the Examination Room.

(8.) Candidates are forbidden to tear up papers or to throw papers on the floor. All "spoilt copies, &c.," should be left on the desk where the candidate has been writing.

(9.) Candidates will be allowed to retain their question papers.

L. RICE,
Director of Public Instruction,
Mysore & Coorg.

MEDICAL DEPARTMENT.

Deaths registered from different Causes in the Provinces of Mysore and Coorg during the months of April and May 1880.

April 1880.

Division.	Name of District.	Population according to Census of 1871.			Total Deaths from all Causes.			Ratio of Deaths per cent of Population from all Causes.			Number of Births registered.		
		Males.	Females.	Total.	M.	F.	Total.	M.	F.	Total.	M.	F.	Total.
Nundydroog.	Bangalore District ...	414,543	413,811	828,354	505	421	926	·12	·10	·11	700	640	1,340
	Kolar do ...	309,685	309,269	618,950	374	397	771	·12	·13	·12	312	258	570
	Túmkúr do ...	315,440	316,799	632,239	407	343	750	·13	·11	.12	320	314	634
	Total of the Division...	1,039,668	1,039,879	2,079,547	1,286	1,161	2,447	·12	·11	·12	1,332	1,212	2,544
Ashtagram.	Mysore District ...	467,562	475,625	943,187	745	573	1,318	·16	·12	·14	634	414	1,148
	Hassan do ...	313,683	326,194	639,877	508	412	920	·16	·12	·14	343	395	738
	Total of the Division...	781,245	801,819	1,583,064	1,253	985	2,238	·16	·12	·14	977	909	1,886
Nagar.	Shimoga District ...	258,446	240,530	498,976	438	407	845	·16	·16	·16	537	501	1,038
	Kadur do ...	184,978	177,487	362,465	253	239	497	·14	·14	·14	260	238	498
	Chitaldroog do ...	271,537	259,773	531,360	375	372	747	·14	·14	·14	394	344	738
	Total of the Division...	715,011	677,790	1,392,801	1,071	1,018	2,089	·15	·15	·15	1,191	1,083	2,274
	Total of the Province...	2,535,924	2,519,488	5,055,412	3,610	3,164	6,774	·14	·12	·13	3,500	3,204	6,704
	Coorg ...	94,454	73,858	168,312	137	126	263	·14	·17	·16	63	63	126

May 1880.

Division.	Name of District.	Population according to Census of 1871.			Total Deaths from all Causes.			Ratio of Deaths per cent of Population from all Causes.			Number of Births registered.		
		Males.	Females.	Total.	M.	F.	Total.	M.	F.	Total.	M.	F.	Total.
Nundydroog.	Bangalore District... ...	414,543	413,811	828,354	539	495	1,034	·13	·12	·12	660	640	1,300
	Kolar do	309,685	309,269	618,950	327	328	655	·11	·11	·11	310	335	645
	Túmkúr do	315,440	316,799	632,239	344	318	662	·11	·10	·10	323	273	596
	Total of the Division...	1,039,668	1,039,879	2,079,547	1,210	1,141	2,351	·12	·11	·11	1,293	1,248	2,541
Ashtagram.	Mysore District	467,562	475,625	943,187	751	671	1,422	·16	·14	·15	685	645	1,330
	Hassan do	313,683	326,194	639,877	506	357	863	·15	·11	·13	397	317	714
	Total of the Division...	781,245	801,819	1,583,064	1,257	1,028	2,285	·16	·13	·14	1,082	962	2,044
Nagar.	Shimoga District	258,446	240,530	498,976	446	377	823	·17	·15	·16	546	520	1,066
	Kadur do	184,978	177,487	362,465	308	290	598	·16	·16	·16	254	231	485
	Chitaldroog do	271,587	259,793	531,360	416	402	818	·15	·15	·15	402	410	812
	Total of the Division...	715,011	677,790	1,392,801	1,170	1,069	2,239	·17	·16	·16	1,202	1,161	2,363
	Total of the Province...	2,535,924	2,519,488	5,055,412	3,637	3,238	6,875	·14	·13	·14	3,577	3,371	6,948
	Coorg...	94,454	73,858	168,312	156	120	276	·16	·16	·16	64	46	110

J. HOUSTON, M. D.,
Surgeon to the Mysore Commission.

BANGALORE MUNICIPALITY.

No. 2676. *The 8th November* 1880.

Memo of propositions to be laid before the Ordinary Meeting of the Cantonment Municipal Commission, to be held at their Office Premises No. 12, Residency Road, on Monday the 29th November 1880, at 7½ A. M.

1. The usual monthly accounts for the month of October 1880.

2. Remission and exemption of house-tax.

3. List of agreements entered into by the President during the month of October 1880.

4. List of estimates sanctioned by the President during the month of October 1880.

5. Proceedings of the Budget Committee selecting works for insertion in the Budget for the official year 1881—82.

6. Letter from Major-General Ottley, resigning his appointment as Municipal Commissioner, No. 5, Blackpalli Division.

7. Election of a Committee for reporting on the Market Prizes to be awarded on the 23rd of December 1880.

8. Application from Chaudri Mahomed Usman, offering Rs. 500 for the rice mandis in Broadway.

J. H. ORR,
President, Cantt. Ml. Commn.

NUNDYDROOG DIVISION.

NOTIFICATION.

The 10th November 1880.

Sessions for the Bangalore District will be held at Bangalore on Monday the 22nd day of November 1880 and following days :—

The cases mentioned below are posted for trial :—

Magisterial No.	Sessions No.	Names of Prisoners.	Name of the Committing Magistrate.	Sections charged under—	Date of Committal.
30 of 1880.	38	Kulli	Mr. B. Srinivasaiengar, Treasury Assistant Commissioner and 1st Class Magistrate.	312, I. P. C.	8th November 1880.
	39	Chinnaiya	Mr. E. Pereira, Sar-Amien, and 2nd Magistrate, Town and Cantonment.	497 and 498, I. P. C.	29th October 1880.

The Magistrates above named are hereby directed to cause all parties connected with the above noted cases to be in attendance at Bangalore before the Sessions Court on Monday the 22nd day of November 1880, at 11 A. M.

All cases committed prior to that date will be taken up for trial in addition to the above.

T. R. A. THUMBOO CHETTY,
Sessions Judge.

BANGALORE DISTRICT.

NOTIFICATION.

The 1st November 1880.

Notice is hereby given that sealed tenders will be received up to 1st December 1880, by the Superintendent of the Central Jail, for the supply by contract of all articles of diet, &c., required for the use of the prisoners confined in the Bangalore Central Jail and District Lock-up.

2. No tenders will be received after the date above mentioned.

3. Tenders to be superscribed "Tenders for the supply of provisions for the Central Jail and District Lock-up."

4. No tenders will be received unless accompanied by a deposit of Rs. 500 in cash or currency notes.

5. Tenders will be opened by the Superintendent, Central Jail, at his Office on the date above named, in the presence of such tenderers as may choose to attend.

6. All tenders must specify the rate at which the following articles can be supplied in pound weights per rupee :—

Rice, 1st and 2nd sort ..	Salt ..	Coffee
Ragi do ..	Curry-powder ..	Tea
Dál do ..	Onions ..	Bread
Ballar ..	Garlic ..	Milk
Meat ..	Vegetables ..	Soap-nut
Tyre ..	Firewood ..	Soap
Gingelly-oil ..	Gram ..	Marking-nut
Ghee ..	Soji ..	Pepper
Tamarind ..	Sugar ..	

7. The rates tendered must, besides the articles specified above, include lamp-oil, earthen plates, lotas, brooms, &c. The contractor will supply ragi grain to be ground by convicts, and it will be issued as flour. The supply will be calculated and payment made upon the quantity so issued at the price of ragi grain.

8. The probable requirements of the chief articles for the year will be (for 900 convicts on various scales) as under :—

Ragi	(lbs)	..	416,667	Gingelly-oil	(lbs)	..	2,833
Rice	,,	..	94,167	Salt	,,	..	12,500
Dál or ballar	,,	..	62,500	Curry-powder	,,	..	9,583
Vegetables	,,	..	125,000	Onions	,,	..	12,500
Meat	,,	..	28,333	Firewood	,,	..	500,000
Ghee	,,	..	2,833				

9. The Superintendent reserves to himself the right of rejecting any tender without assigning any reason for so doing.

10. The deposit of the successful competitor will be retained, and will be forfeited if he fails to execute the contract bond or to furnish security to the amount of Rs. 1,500 in cash or Government bonds within one week from the date of the acceptance of his contract being made known to him.

11. No advance of cash will be made to the contractor. Payments for the articles supplied will be made by the Superintendent, Central Jail, as soon as possible after the 1st of each month.

12. A store-room will be made over to the contractor in which he can keep all non-perishable articles. Perishable articles, such as meat, &c., must be at the Jail by 8 A. M. daily.

13. The contract must not be sublet.

14. A fine not exceeding Rs. 150 will be levied at the discretion of the Superintendent of the Central Jail for any infringement of the stipulation of the contract, or for the supply of any inferior articles, and if frequently violated, the contract may be annulled and the security confiscated to Government.

15. The decision of the Superintendent of the Central Jail to be final in all questions of infringement of contract.

16. The contractor will be bound to purchase vegetables from the jail garden for the use of the prisoners at the same rate as in the contract.

17. Any further information can be obtained by applying at the Superintendent's Office.

18. This contract will be subject to the confirmation of the Inspector General of Prisons in Mysore.

J. HENDERSON, M. D.,
Supt., Central Jail.

TUMKUR DISTRICT.

The 8th November 1880.

NOTICE UNDER SECTION 354 OF THE CODE OF CIVIL PROCEDURE.

It is hereby declared that the undermentioned person is an insolvent and as such entitled to the benefit of the provisions of Chapter XX of the Code of Civil Procedure, and it is ordered that the said insolvent be and is hereby discharged from custody and from all liability to be arrested or imprisoned in respect of any of the debts mentioned in the schedule filed with records of the case concerned.

Kumbar Siddappa .. In Insolvent Case No. 12 of 1880.

E. CHITAMBRAM IYER,
Subordinate Judge.

MYSORE DISTRICT.

The 2nd October 1880.

Descriptive roll of a convict who escaped from a gang of prisoners working within the precincts of the Mysore Jail at about 6-30 A. M. on the 2nd October 1880.

Jail Register No.—8639. *Name and Father's Name*—Guruva *alias* Malla, son of Malla. *Place of Residence*—Sivaram Pettah, Mysore. *Caste and Profession*—Gollar, domestic servant. *Age and Height*—35 years, 5 feet 3¾ inches. *Crime and period of sentence*—Theft, 2 years' rigorous imprisonment from 9th August 1880. *Awarding Court*—Town Magistrate, Mysore, Case No. 269 of 1880. *Descriptive marks*—Color brown, scars on either temple and just above eye-brows, a scar on inner part of right thigh about the lower third, two vaccination marks on either arm, either big toe turned outwards a little and a scar just below navel. Has a fetter gall on his right leg. A reward of rupees twenty-five will be given for the prisoner's re-capture.

T. J McGANN,
Supt., Mysore Jail.

KADUR DISTRICT.

NOTIFICATION.

The 21st October 1880.

Notice is hereby given that the old travellers' bungalow at Yedahalli inclusive of the out-houses and of the compound containing some grafted mango trees, being Government property, will be sold by public auction on Thursday the 25th November 1880, before the Amildar at the spot. The property will be knocked down to the highest bidder subject to confirmation by the Deputy Commissioner. Such highest bidder to pay at once a deposit of 25 per cent of the amount offered, and the remainder of the amount after the sale is confirmed by the Deputy Commissioner. In default of either of these conditions the building will be sold again at the risk of the original purchaser.

For further particulars intending purchasers are requested to apply to the Amildar.

G. F. MEIKLEJOHN,
Offg. Dy. Commr.

Abstract of Meteorological Reports received from Head-Quarters of Districts in the Province of Mysore, from 16th to 31st October 1880.

DISTRICT.	Thermometer. Averages for the haf month. 9-30 A. M. Dry bulb.	9-30 A. M. Wet bulb.	9-30 A. M. Difference.	3-30 P. M. Dry bulb.	3-30 P. M. Wet bulb.	3-30 P. M. Difference.	Thermometer. Maximum.	Thermometer. Minimum.	Rain. Inches.	Rain. Cents.	Wind.
Kolar	74	...	...	76	...	...	77	68	6	36½	N. E.
Túmkúr ...	76	66	10	77	66	11	86	62	5	87	N. E.
Mysore*... ...	...	...	...	...	...	...	...	...	...	...	...
Hassan	64	33	31	70	37	33	79	63	7	13	S. W.
Shimoga ...	77	...	...	79	...	...	...	...	5	22	N. E.
Kadur ...	74	66	...	73	66	...	79	60	5	29	N. E. & S. W.
Chitaldroog ...	73	...	...	76	...	...	...	...	8	27	N. E. & E.

*Information not received.

COORG.

IN THE COURT OF THE 1ST ASSISTANT SUPERINTENDENT OF COORG.

The Proclamation of Sale.

Civil Original Suit No. 42 fo 1879. Execution Case No. 28 of 1880.

Irappashetti, Devanga Merchant of Mahadeopet, Mercara .. .. Plaintiff.
1. Revanna, 2. Nanjappa Jinagars of Mahadeopet, Mercara .. .. Defendants.

In execution of a decree of the above Court in the above case, dated the 11th Dec. 1879, in virtue whereof a sum of Rs. 1,157—6—6 was adjudged to be payable by the said defendants unto the said plaintiff and of a warrant, dated 15th June 1880, for giving effect to the said decree by sale of property attached thereunder, notice is hereby given that on the 6th day of December 1880 at 2 P. M., Nazir of this Court will, at Mercara, before the 2nd Assistant Superintendent's Court, sell by auction to the highest bidder and without reserve the right, title and interest of the said defendants, in the several articles of the immovable properties hereunder specified and every power of disposing of the same or any of them or of the profits arising therefrom which the said defendants may now consistently with the law exercise for their own benefit.

1	2	3	4	5	6	7	8	9
Lot No.	Situation of Property.	Description of lot including all particulars described in Amin's Report.	Survey No., Municipal No., or other fiscal No	Government Revenue including Local Cess, any other known fiscal charge resting on the lot and shewing any arrears due.	Present occupation, if known.	Mortgage or lien subject to which attachment has been continued and sale is to be made under Sections 282 and 295 of the Code of Civil Procedure.	List of rights, charges and claims to which the lot is supposed to be liable after inquiry under Section 287 of the Code of Civil Procedure and Rules made thereunder by the High Court.	List of claims to raise attachment rejected wholly or in part under Section 278 of the Code of Civil Procedure.
1	Mercara Mahadeopet Main Street.	A tiled house taxed at Rs. 3—8—5, and bounded on the— North by Annoji's brother Rudraiya's house, south by carpenter Bettachari's house, west by public road, east by Annoj's building site which is in the lower street. The above house is valued at Rs. 500. 1. The walls of the house are built of mud and bricks, and the roof is constructed of rafters and reepers. 2. The house is divided into 3 apartments and measures 48¾ feet × 21 feet. 3. The annual income from rent is estimated at Rs. 50. 4. The house is mortgaged to Sahukar Narayandas Sait for Rs. 200 who has rented one of the apartments to a Sivachar Gurupadaiya.	Municipal No. 60.	The house tax Rs. 3—8—5 is paid.	Defendants Revanna and Nanjappa.	Under the deed of mortgage executed by the deceased Annoji, father of the defendants, in favor of the plaintiff.	Mortgaged to Sahukar Narayandas Sait for Rs. 200.	The defendants filed a suit for the withdrawal of the attachment, stating that the property is ancestral, but the claim was thrown out as it was found that the mortgaged property was the late Annoji's self acquisition.
2								

1	2	3	4	5	6	7	8	9
Lot No.	Situation of Property.	Description of lot including all particulars described in Amin's Report.	Survey No., Municipal No., or other fiscal No.	Government Revenue including Local Cess, any other known fiscal charge resting on the lot and shewing any arrears due.	Present occupation, if known.	Mortgage or lien subject to which attachment has been continued and sale is to be made under Sections 282 and 295 of the Code of Civil Procedure.	List of rights, charges and claims to which the lot is supposed to be liable after inquiry under Section 287 of the Code of Civil Procedure and Rules made thereunder by the High Court.	List of claims to raise attachment rejected wholly or in part under Section 278 of the Code of Civil Procedure.
2	Gare street in Mahadeopet, Mercara.	A tiled house taxed at Rs. 2–6–0 and bounded on the east by public road, west by the backyard of the above house (No. 1), south by farrier Hydersaib's house, north by Devanga Kunchetti Rudraiya's house; estimated value Rs. 300. 1. The house is divided into 5 rooms, of which 3 are built of mud walls and the roof is built of rafters and reepers, the other two rooms have mud walls but no roof. 2. The extent of the house is 49 feet × 19 feet. 3. The annual income is estimated at Rs. 54—0—0. 4. One of the above rooms is mortgaged to Musalman Syed for Rs. 100, and it is occupied by him. 5. The 2nd room is occupied by tailor Ranoji on a monthly rent of Rs. 1—8—0 and it is mortgaged to Brahman Venkatramanaiengar for Rs. 200. 6. The 3rd room is rented for Rs. 1—8—0 per mensem to barber Krishna. 7. The other 2 rooms are in a ruinous state. 8. The house is leased for a period of 5 years on 1st March 1869, by Annoji to one Gáre Ninganna for Rs. 150—0—0 and the mortgage bond is registered in the Mercara Taluk Sub-Registry Office. 9. The house is mortgaged for Rs. 100 to Jagganath Mohannath by the deceased Annoji and the mortgage bond is registered on 14th May 1868 in the Mercara Taluk Sub-Registry Office.	Municipal No. 140.	House-tax Rs. 2—6—0 paid.	Defendants Revanna and Nanjappa.	Under the deed of mortgage executed by the deceased Annoji, father of the defendants, in favor of the plaintiff.	1. One room is mortgaged to Brahman Venkatramanaiengar for Rs. 200. 2. Do do Gáre Ninga for Rs. 150. 3. Do do Jagganath Mohannath for Rs. 100, and it is in ruinous state. 4. Do do Musalman Syed for Rs. 100.	The defendants filed a suit for the withdrawal of the attachment stating that the property is ancestral but the claim was thrown out as it was found that the mortgaged property was the late Annoji's self acquisition.

H. M. S. MAGRATH,
1st Asstt. Supt.

Deaths registered in the Town and Cantonment of Bangalore for the Week ending 8th October 1880.

Estimated Population. { Males .. 72,236 / Females .. 70,277 } Total ... 142,513

Diseases.	M.	F.	Total.
Cholera ...	...	...	...
Small-pox	...	...	...
Fevers ...	6	10	16
Bowel-complaints	3	3	6
Suicide ...	...	...	...
Wounding	...	...	...
Accident	...	...	...
Snake-bite or killed by wild beasts.	...	...	...
All other causes	10	10	20
Total.....	19	23	42
Births during the week	33	28	61

Deaths registered in the Town of Mysore for the Week ending 8th October 1880.

Estimated Population. { Males .. 29,081 / Females .. 28,734 } Total ... 57,815

Diseases.	M.	F.	Total.
Cholera	...	...	...
Small-pox	...	...	...
Fevers	2	4	6
Bowel-complaints	4	2	6
Suicide	...	...	...
Wounding	...	...	...
Accident	1	...	1
Snake-bite or killed by wild beasts.	...	...	...
All other causes	...	...	...
Total.....	7	6	13
Births during the week	2	8	10

Deaths registered in the Town and Cantonment of Bangalore for the Week ending 15th October 1880.

Estimated Population. { Males .. 72,236 / Females .. 70,277 } Total ... 142,513

Diseases.	M.	F.	Total.
Cholera...	...	...	...
Small-pox	...	...	...
Fevers...	7	9	16
Bowel-complaints	3	...	3
Suicide...	...	...	...
Wounding	...	...	...
Accident	1	...	1
Snake-bite or killed by wild beasts.	...	...	...
All other causes	15	8	23
Total.....	26	17	43
Births during the week	32	32	64

Deaths registered in the Town of Mysore for the Week ending 15th October 1880.

Estimated Population. { Males .. 29,081 / Females .. 28,734 } Total ... 57,815

Diseases.	M.	F.	Total.
Cholera	...	...	...
Small-pox	...	...	...
Fevers	2	2	4
Bowel-complaints	2	2	4
Suicide	...	...	...
Wounding	...	...	...
Accident	...	...	...
Snake-bite or killed by wild beasts	...	...	...
All other causes	...	...	...
Total.. ...	4	4	8
Births during the week	4	4	8

29th October 1880.

J. HOUSTON, M. D.,
Surgeon to the Mysore Commn.

LOST—

The left half of the following Currency Note :—

No.	Circle.	Value.	Claimant.
B 56—15649	Madras.	Rs. 10	M. Farrid Khan, Accountant, Munsiff's Court, Kadur Sub-Division.

397

COMMISSARIAT DEPARTMENT.

NOTIFICATIONS.

The 3rd November 1880.

Sealed tenders in the form used in the Commissariat Department will be received by the Executive Commissariat Officer for the supplies entered in the subjoined schedule up to 1 o'clock on the 15th January 1881, and the tenders will be opened at that hour in presence of those interested who choose to attend.

Tender forms and particulars regarding the contract, and the form of contract, can be obtained on application to the Executive Commissariat Officer, Bangalore.

Articles.		Probable Quantity.	Date of Delivery.	To Whom and Place.	Deposit to accompany Tenders.
					Rs.
1. Oil, lamp	I. Gall.	3,491	In such quantities as may be required from 1st August 1881 to 31st March 1882.	To The Quarter-Masters of the Corps and to Departments.	180
Oil, cocoanut	,,	4			
Candles (6 to a lb.)	No.	569			
Thread, cotton	lb.	168			
2. Lamps for carts and trollies	No.	20			10
Lamps, square	,,	5			
Lamp, tin, necessary	,,	50			
Burner, glass	,,	150			
Burners, tin	,,	50			
Wires for burners	,,	100			
Sealing wax, black	lbs.	36			
Lamps, American, wall	No.	8			
3. Ration, baskets	,,	740			25
Wicker do	,,	150			
Toties do	,,	3,374			
Brooms for sweepers	,,	5,390			
Do with long handles	,,	50			
4. Tinning copper boilers, large and small	,,	2,328	In such quantities as may be required from 1st April 1881 to 31st March 1882.	To The Quarter-Masters of the Corps and to Departments.	15
Do frying pans	,,	1,296			
Do ladles	,,	1,440			
5. Firewood for browning arms	lbs.	1,080			15
Charcoal	,,	27,450			
6. Monthays	No.	618			15
Pots necessary	,,	160			
Pots, water 1st and 2nd size	,,	534			
Chatties for filter with covers	,,	1,608			
Chanakays	,,	618			
7. Straw paddy for stuffing 2,279 palliasses and pillows, quarterly at 24 lbs. each bed	lbs.	2,18,784			50
For washing and repairing palliasses	No.	400			

Articles.	Probable Quantity.	Date of Delivery.	To Whom and Place.	Deposit to accompany Tenders.
8. Bullocks with drivers complete for filth-carts No.	1	Required daily at 6 A. M., and 4 P. M., from 1st April 1881 to 31st March 1882 to visit all the houses, Barracks and Hospital as required twice a day to remove the soil to the pits.	To the Quarter-Master, Queen's Own Sappers and Miners.	Rs. 10
9. Firewood dried in billets not exceeding 3 feet in length and 4 inches in diameter for working the engine in the Alsur Rock and Dhobi's wells ,,	1,020,000	Between 1st and 10th of each month, from 1st April 1881 to 31st March 1882.	To the Mechanical Engineer of the Alsur Rock.	165
10. Castor-oil Bottles	1,080			20
Cocoanut-oil ,,	96			
Tallow lbs	360			
Thread, cotton ,,	360			
Cotton waste ,,	480			

The 3rd November 1880.

Sealed tenders in the form used in the Commissariat Department will be received by the Executive Commissariat Officer for the supplies entered in the subjoined schedule up to 1 o'clock on the 15th January 1881, and the tenders will be opened at that hour in presence of those interested who choose to attend.

Tender forms and particulars regarding the contract, and the form of contract, can be obtained on application to the Executive Commissariat Officer, Bangalore.

Articles.	Probable Quantity.	Date of Delivery.	To Whom and Place.	Deposit to accompany Tenders.
Firewood dried in billets not exceeding 18 inches in length and 2 inches in thickness for ovens.	lbs. 401,500	Daily 1,100 lbs. or in such quantities as may be required from 1st April 1881 to 31st March 1882.	To the Officer in charge of Government Bakery, Bangalore.	Rs. 80
Firewood dried in billets not exceeding 3 feet in length and 4 inches in diameter for engine boilers.	720,000	To be delivered on the 1st of each month 60,000 lbs. or in such quantities as may be required from 1st April 1881 to 31st March 1882. The contractor will stack a month's consumption at the back of the Bakery.		135

By Order of the Commissary General,

B. W. MAGRATH, *Colonel,*
Asstt. Commissary General.

THE

MYSORE GAZETTE.

Published by Authority.

BANGALORE, SATURDAY, NOVEMBER 20, 1880.

☞ Separate paging is given to this Part in order that it may be filed as a separate compilation.

PART II.

Notifications by the Judicial Commissioner, &c.

JUDICIAL DEPARTMENT.

NOTIFICATIONS.

The 13*th November* 1880.

The undermentioned gentleman has been enrolled as 1st Grade Pleader in the Courts of Coorg, under the Rules of 23rd December 1879 :—

Mr. Michael William Dee.

The 15*th November* 1880.

The undermentioned person has been enrolled as 2nd Grade Pleader in the Courts of Mysore, under the Rules of 18th February 1879 :—

206. Lakvalli Sivaramaiya .. Proposing to practise in the Courts of the Nagar Division.

The 17*th November* 1880.

The undermentioned persons have been enrolled as 2nd Grade Pleaders in the Courts of Coorg, under the Rules of 23rd December 1879 :—

7. Hakkatur Paramesvaraiya .. In the Courts of the Parpattegars and Subedars in Coorg.
8. Arji Krishnaiengar Do do

IN THE COURT OF THE JUDICIAL COMMISSIONER OF MYSORE.

Application No. 3 *of* 1880.

Alexander Edward Cathcart Smith .. .. .. *Applicant.*

In the matter of the estate of the late Mary Anne Charlotte Francis Cleveland.

Whereas Alexander Edward Cathcart Smith, residing at Madras, executor of the will of the deceased above named, has applied to this Court for letters of administration (with a copy of the copy of the will annexed) of the said deceased who died at Bangalore on the 27th May 1880 and Saturday the 27th day of November 1880, at 11 A. M., has been fixed for the hearing of the application.

All persons claiming to have any interest in the estate of the deceased are hereby called upon to come and see the proceedings, on or before the said 27th day of November 1880.

Given under my hand and the seal of the Court this 13th day of November 1880.

By the Court,

S. HAMAJEE ROW,
Registrar to the Court of Judl. Commr.

FINANCIAL DEPARTMENT.

COPPER COINS.

To—The Deputy Commissioners, Treasury Department, Circular No. 1483, *dated 12th November* 1880.

The Deputy Accountant General has the honor to invite the attention of Deputy Commissioners of Districts to the Chief Commissioner's orders contained in this Office Circular No. 1344, dated 21st November 1877, published in Part II, *Mysore Gazette*, dated 24th November 1877, which authorized the receipt from ryots of sums due on account of Government revenue in British or Mysore copper coins in the proportion of ¼th of the khist payable and not exceeding Rs. 5 in each case--also the receipt of British copper coins in exchange for silver in sums of Rs. 2 and upwards. As the collection season is at hand it is requested that the attention of the Amildars may be specially directed to this Circular.

DESTRUCTION OF OLD TREASURY RECORDS.

To—The Deputy Commissioners, Treasury Department, Circular No. 1484, *dated 16th November* 1880.

The Deputy Accountant General has the honor to request that the old treasury records of the classes enumerated in the margin for the years 1874—75 and 1875—76 may be destroyed in the District and Taluk Treasuries respectively in the presence of the officer in charge. A complete list should be made of the papers before they are destroyed and it should be carefully preserved.

District Treasuries.

1. Treasury copy of pass books of Executive Engineers.
2. Margins of District Treasury cheques issued in taluks.
3. Margins of advices issued to taluks for payment of Public Works and Forest cheques.
4. Chalans and other vouchers for the receipt of money.
5. Margins of transfer and other receipts issued.
6. Taluk Daily C. Accounts at District Treasuries (*not* those in the Taluk Treasuries.)
7. District and Taluk daily and monthly cash balance sheets.
8. District and Taluk daily and monthly accounts of general stamp papers and court fees labels and postage labels.
9. Monthly accounts with Her Majesty's Treasury.
10. Savings' Bank Journals of receipts and disbursements and application.
11. Savings' Bank pass books of depositors whose accounts have been closed.
12. Money Order Journals of receipts and disbursements, applications, &c., in District Treasuries (from commencement up to 1875—76 inclusive.)
13. Taluk daily and monthly returns of deposit receipts and payments from commencement to 1875—76 inclusive.

Taluk Treasuries.

1. Daily and monthly cash balance return.
2. Daily and monthly accounts of general stamp papers, court fees and postage labels.
3. Application for the deposit and withdrawal from Government Savings' Bank.

H. HUDSON,
Dy. Acctt. General in Mysore.

EDUCATIONAL DEPARTMENT.

MIDDLE SCHOOL EXAMINATION.

The 4th November 1880.

1. Candidates whose names have been registered for the approaching Middle School Examination to be held at Bangalore, Mysore, Shimoga, and Hassan are informed that the examination will commence on Wednesday, the 1st December, at 10 A. M. precisely.

2. Candidates should present themselves at the Central College in Bangalore, the Maha Raja's College in Mysore, the Shimoga College and the Hassan High School respectively, at half past 9 A. M. each day.

The examination will be conducted in the order of time and subjects shewn below :—

Days.	Hours.	Subjects.
Wednesday, 1st December 1880.	10 — 1 ...	Geography and Indian History.
Do do do.	2 — 4 ...	Arithmetic.
Do do do.	4 — 4½ ...	English Handwriting.
Thursday, 2nd December 1880.	10 — 12½ ...	Translation, &c., and English Grammar.
Do do do.	12½ — 1 ...	English Dictation.
Do do do.	2 — 4 ...	Mathematics.
Do do do.	4 — 4½ ...	Handwriting in Second Language.
Friday, 3rd December 1880.	10 — 12½ ...	Second Language. Composition, Grammar, and Text Book.
Do do do.	12½ — 1 ...	Do Dictation.
Do do do.	2 — 4 ...	English History.
Saturday, 4th December 1880.	10 — 12... ...	Physical Geography.
Do do do.	2 — 4... ...	Physiology or Hygiene.
Monday, 6th December 1880.	10 — 12... ...	Political Economy.
Do do do.	2 — 4... ...	Agriculture.

3. Matriculates who have registered their names for examination in handwriting and candidates for the modified General Test, will have to appear on the days specified in the above table for examination in their respective subjects.

The attention of candidates is particularly called to the following rules :—

(1.) No candidate will be allowed to quit the Examination Room on any day until the expiration of half an hour from the time fixed for the commencement of the Examination, and candidates arriving after the expiration of that half hour will not be admitted.

(2.) No candidate will be allowed to re-enter the Examination Room, during the hour of Examination, after once quitting it, nor to leave the room without finally giving up his answer papers.

(3.) Any candidate detected in speaking to, or in any way communicating with, any other candidate, will be at once removed from the room, and the circumstance be reported to the Commissioner.

(4.) *No candidate will on any account be allowed to take into the Examination Room books or papers of any kind.* Any one detected with such in his possession, or having recourse to any unfair practices, will be removed from the room and the occurrence be reported to the Commissioner.

(5.) A candidate having completed his paper will rise from his seat and remain standing until the Superintendent takes his answer papers. Any candidate wishing to ask any question will pursue the same course, but will on no account leave his place.

(6.) Any paper sent up without the candidate's name and number affixed will not be examined.

(7.) Candidates will not be allowed to take any papers, except their question papers, out of the Examination Room.

(8.) Candidates are forbidden to tear up papers or to throw papers on the floor. All "spoilt copies, &c.," should be left on the desk where the candidate has been writing.

(9.) Candidates will be allowed to retain their question papers.

L. RICE,
Director of Public Instruction,
Mysore & Coorg.

MEDICAL DEPARTMENT.

Deaths registered from different Causes in the Provinces of Mysore and Coorg during the month of June 1880.

Division.	Name of District.	Population according to Census of 1871.			Total Deaths from all Causes.			Ratio of Deaths per cent of Population from all Causes.			Number of Births registered.		
		Males.	Females.	Total.	M.	F.	Total.	M.	F.	Total.	M.	F.	Total.
Nundydroog.	Bangalore District... ...	414,543	413,811	828,354	529	548	1,077	·13	·13	·13	791	754	1,545
	Kolar do	309,685	309,269	618,950	335	302	637	·11	·10	·10	407	358	765
	Túmkúr do	315,440	316,799	632,239	325	283	608	·10	·09	·09	312	297	609
	Total of the Division...	1,039,668	1,039,879	2,079,547	1,189	1,133	2,322	·11	·11	·11	1,510	1,409	2,919
Ashtagram.	Mysore District	467,562	475,625	943,187	839	685	1,524	·18	·14	·16	829	768	1,597
	Hassan do	313,683	326,194	639,877	457	355	812	·15	·11	·13	364	307	671
	Total of the Division...	731,245	801,819	1,583,064	1,296	1,040	2,336	·17	·13	·15	1,193	1,075	2,268
Nagar.	Shimoga District	258,446	240,530	498,976	417	390	807	·16	·16	·16	633	609	1,242
	Kadur do	184,978	177,487	362,465	313	281	594	·17	·16	·16	275	257	532
	Chitaldroog do	271,587	259,773	531,360	338	353	691	·12	·14	·13	524	440	964
	Total of the Division...	735,011	677,790	1,392,801	1,068	1,024	2,092	·15	·15	·15	1,432	1,306	2,738
	Total of the Province...	2,535,924	2,519,488	5,055,412	3,553	3,197	6,750	·14	·13	·13	4,135	3,790	7,925
	Coorg...	94,454	73,858	168,312	159	122	281	·17	·17	·17	83	80	163

J. HOUSTON, M. D.,
Surgeon to the Mysore Commission.

BANGALORE MUNICIPALITY.

No. 9. *The* 15*th November* 1880.

Proceedings of an Ordinary Meeting of the Cantonment Municipal Commission held at their Office Premises No. 12, Residency Road, on Tuesday the 26th October 1880, at 7½ A. M.

President.

Dr. J. H. Orr, C. B.—*Present.*

Ex-Officio Members.

Present.—The Asstt. Quarter-Master Genl., M. Dn.
Absent.—The Dy. Surgeon Genl., H. M.'s British Forces.
The Executive Engr., Bangalore Division, Mysore D. P. W.
The Asstt. Engineer, Madras D. P. W.
The District Superintendent of Police.
The Town and Cantt. 2nd Magistrate.

Municipal Commissioners of Divisions.

No. 1, *Alsur Division.*

Present.—V. Sadasiva Modaliar, Esq.
R. P. Campbell, Esq.

No. 2, *Shule Division.*

Present.—Standish Lee, Esq.
V. Vasudeva Modaliar, Esq.

No. 3, *Richmond Town and Fort Division.*

Present.—Abdul Husen Saib, Esq.
Captain P. Curley.

No. 4, *General Bazar Division.*

Present.—Abdul Khudus Khadri Khaji Saib, Esq.
A. R. Sabhapati Modaliar, Esq.
Mahomed Saliha Saib, Esq.

No. 5, *Blackpalli Division.*

Present.—T. T. Leonard, Esq.
Absent.—J. Ramaiya Naidu, Esq.

No. 6, *High Ground Division.*

Absent.—Major-General C. G. Ottley.
G. G. Brown, Esq.

Statement of Accounts.

1. The Progress Report, Account Current, Statement of Cash Balance and Assessor's Accounts for September 1880, together with the Mortuary Report for the same period, are submitted and after examination are adopted :—

Receipts.	Amount.		
I. Octroi.... Class 1. Articles of food or drink for men or animals or duty on dry and green cocoanuts ...	607	13	8
„ 2. Animals for slaughter	...	...	...
„ 3. Fuel, lighting and washing	...	...	...
„ 4. Building materials	20	15	0
„ 5. Drugs, spices and gums	...	...	...
„ 6. Tobacco and betel-leaves	3,130	7	9
„ 7. Cloth	...	...	...
„ 8. Metals	...	...	...
II. Tax on houses, buildings or lands	6,466	14	10
III. Tax on professions and trades or collections of liquor license fees...	473	5	4
IV. Tax on carriages, horses, &c.	...	...	...
V. Tolls on carts, carriages, &c.	...	...	...
VI. Special taxes under Section II, Act VI of 1868—Conservancy ...	...	...	...
VII. Rents ... 1. Nazul lands	25	10	0
2. Do shops	453	1	4
3. Serais	...	...	...
4. Confiscated lands	...	...	...
5. Compound or site tax	...	...	...
VIII. Gardens	...	...	...
IX. Extra-ordinary. 1. Sale of houses and lands	...	...	..
2. Loans	...	...	...
3. Refunds and recoveries	...	...	...
4. Interest on securities and loans	...	...	...
5. Other Items	...	...	...
X. Fines	54	8	0
XI. Pounds	59	2	0
XII. Miscellaneous	743	9	4
XIII. Transfers and Contributions—Received from the Executive Engineer, Bangalore Division, on account of grant-in-aid for repairing suburban roads	1,715	13	9
Total Rupees.....	13,751	5	0
To Cash Balance brought forward from last month's accounts.....	17,007	1	9
Total Rupees.....	30,758	6	9

Expenditure.	Amount.		
I. Collections... 1. For Octroi tax	411	14	5
2. „ Tax on houses, buildings and lands ...	457	1	9
3. „ Tax on professions and trades ...	10	0	0
4. „ Tax on carriages, houses, &c. ...	..	..	..
5. „ Tolls on carts and other vehicles ...	...	...	...
6. Special taxes	...	...	...
7. Rents assigned to Municipality ...	109	15	4
II. Head Office Charges	717	1	5
III. Public Works. 1. Supervision	500	14	0
2. *a.* Original Works	1,328	13	5
b. Purchase of lands	...	...	...
c. Compensation for houses, &c. ...	133	12	11
3. Repairs	3,142	5	3
IV. Police	1,376	8	0
V. Education	...	...	...
VI. Charitable Grants. 1. Dispensary and Medical Charges ...	...	...	...
2. Vaccination	20	0	0
3. Asylums	...	...	...
VII. Conservancy	1,660	5	10
VIII. Road watering	60	5	4
IX. Lighting	638	7	3
X. Gardens ... 1. Public Gardens	...	...	..
2. Nursery	7	0	0
3. Farms	...	...	...
XI. Extraordinary... 1. Museums and Institutes ...	...	...	...
2. Purchase of Government Notes ...	...	...	...
3. Fairs and Exhibitions	...	..	...
XII. Miscellaneous ... 1. Repayment of loans	...	...	...
2. Refund of excess collections ...	...	...	...
3. Cattle Pound charges	63	14	0
4. Statistics and mortuary registration...	90	0	0
5. Other miscellaneous items ...	318	11	4
XIII. Reserve	603	3	6
Total Rupees.....	11,650	5	9
To Cash Balance carried to next month's accounts.....	19,108	1	0
Total Rupees.....	30,758	6	9

Resolution.—Approved.

Exemption of House Tax.

2. Read—Deposition and application from the following parties, claiming exemption from house tax for the half year ending 31st March and 30th September 1880.

No.	Name.	Amount of monthly pension.			Probable rent of the house they live in.			Monthly income from other sources.			Total.			Amount of Assessment.			Remarks.
330	Mrs. Wilsons ...	5	0	0	7	0	0	...	...	...	12	0	0	4	3	2	Occupied by self.

Resolution.—Sanctioned.

Mortuary Register, Bangalore.

3. Statement of Births and Deaths within Cantonment Municipal limits during the month of Sept. 1880.

Causes of Deaths.	Europeans.		East Indians.		Musalmáns.		Hindus.		Native Christians.		Other Classes.		Buddhists.		Total.		Total in—		Difference.	
	M.	F.	M.	F.	M.	F.	M.	F.	M.	F.	M.	F.	M.	F.	M.	F.	Sept. 1880.	August 1880.	Increase.	Decrease.
Cholera ...	...	...	...	...	...	...	...	...	...	...	...	...	...	...	...	...	...	...	...	...
Small-pox ...	...	...	...	...	...	...	1	1	...	...	...	...	...	...	1	1	2	1	1	...
Fevers... ...	...	...	...	1	1	5	8	7	2	...	...	...	...	...	11	13	24	27	...	3
Bowel-complaints ...	...	...	...	...	5	1	5	4	1	1	...	...	...	...	11	6	17	16	1	...
Suicide ...	...	...	...	...	...	...	...	...	...	...	...	...	...	...	...	...	...	...	...	...
Wounding ...	...	...	...	...	...	...	...	...	...	...	...	...	...	...	...	...	...	...	...	...
Accidents ...	...	...	...	...	1	...	2	...	...	...	...	...	...	...	3	...	3	3	...	...
Snake-bite or killed by wild beasts	...	...	...	...	...	...	...	...	...	...	...	...	...	...	...	...	...	...	...	...
Other Causes—																				
Lock-jaw ...	...	...	...	...	2	1	1	3	...	...	...	...	...	...	3	4	7	...	...	...
Convulsion ...	...	...	...	...	1	2	6	...	1	2	...	...	...	...	8	4	12	...	...	...
Ascites ...	...	...	...	...	...	...	...	1	...	...	...	...	...	...	...	1	1	...	...	...
Old age ...	...	...	...	...	1	...	3	3	...	...	...	...	...	...	4	3	7	...	...	...
Consumption ...	...	1	...	...	...	1	4	3	1	1	...	...	...	...	5	6	11	...	...	...
Meningitis ...	...	...	...	...	...	...	1	...	...	...	...	...	...	...	1	...	1	...	...	...
Apoplexy ...	...	...	1	...	...	...	...	...	...	...	...	...	...	...	1	...	1	...	...	...
Still-born ...	...	...	...	1	...	1	3	...	1	1	...	...	...	...	4	3	7	...	...	...
Cough ...	...	...	...	...	2	...	1	2	1	...	...	...	...	...	4	2	6	...	...	...
Hamoplysis ...	...	...	...	...	...	...	1	...	...	...	...	...	...	...	1	...	1	...	...	...
Heart disease ...	...	1	...	...	...	...	...	...	...	...	...	...	...	...	...	1	1	...	...	...
Dentitis ...	1	...	...	...	...	...	...	...	...	...	...	...	...	...	1	...	1	...	...	...
Bronchitis ...	1	...	...	...	...	...	...	...	...	...	...	...	...	...	1	...	1	...	...	...
Debility ...	...	...	...	...	3	...	...	...	...	...	...	...	...	...	3	...	3	...	...	...
Retention of urine	...	...	...	...	...	...	...	...	...	1	...	...	...	...	...	1	1	...	...	...
Fracture of skull	...	...	...	...	...	...	1	...	...	...	...	...	...	...	1	...	1	...	...	...
Fits child birth	...	...	...	...	...	1	...	...	...	...	...	...	...	...	...	1	1	...	...	...
Epilepsy ...	...	...	...	1	...	...	...	...	...	...	...	...	...	...	...	1	1	...	...	...
Paralysis ...	...	...	...	...	1	...	...	2	...	...	...	...	...	...	1	2	3	...	...	...
Anasarca ...	...	...	...	...	...	...	...	1	...	...	...	...	...	...	...	1	1	...	...	...
Morbus cordis	...	...	...	...	...	...	...	...	...	1	...	...	...	...	...	1	1	...	...	...
Total Other Causes.....	2	2	1	2	10	6	21	15	4	6	...	...	...	...	38	31	69	78	...	9
Total Deaths.....	2	2	1	3	17	12	37	27	7	7	...	...	...	...	64	51	115	125	2	12
Total Births during the month...	9	3	2	7	16	16	62	65	14	7	...	...	...	...	103	98	201	232	...	31

405

Abstract of Mortuary Report and Percentage of Births and Deaths on the estimated Population, 78,176.

Classes.	Births.		Difference.		Percentage of Births.		Deaths.		Difference.		Percentage of Deaths.	
	August 1880.	Sept. 1880.	Increase.	Decrease.	August 1880.	Sept. 1880.	August 1880.	Sept. 1880.	Increase.	Decrease.	August 1880.	Sept. 1880.
Europeans ...	5	12	7	...	·12	·29	4	4	...	...	·09	·09
East Indians ...	8	9	1	...	·32	·36	5	4	...	1	·20	·16
Musalmáns	53	32	...	21	·35	·21	25	29	4	...	·16	·19
Hindus ...	143	127	...	16	·29	·25	77	64	...	13	·15	·12
Native Christians	23	21	...	2	·31	·28	14	14	...	...	·19	·19
Buddhists ...	...	..	...	...	...	...	...	...	...	...	...	...
Other Classes ...	...	...	...	...	...	...	...	..	...	...	...	...
Total.....	232	201	8	39	·29	·25	125	115	4	14	·15	·14

REMARKS.

There were 115 deaths during the month; 2 from small-pox, 24 from fevers, 17 from bowel-complaints, 3 from accidents and 69 from other causes as detailed in the previous page.

The number of deaths in September 1880 as compared with those in August 1880 and the corresponding month of last year were as follows :—

Of Europeans 4 against 4, Eurasians 4 against 5, Musalmáns 29 against 25, Hindus 64 against 77, and Native Christians 14 against 14, being 10 less than previous month, and 8 below the total number of deaths registered in the corresponding month of last year.

Ages.

Classes.	No. died during the month.	Under 1 year.	1 to 6 years.	6 to 12 do.	12 to 20 do.	21 to 30 do.	31 to 40 do.	41 to 50 do.	51 to 60 do.	Above 60 do.	Total.
Europeans ...	4	2	...	...	...	..	...	...	1	...	4
East Indians ...	4	2	...	...	...	1	1	1	...	...	4
Musalmáns ...	29	10	2	2	1	2	2	4	2	4	29
Hindus ...	64	16	5	5	5	7	2	6	5	13	64
Native Christians.	14	9	1	...	...	...	2	...	1	1	14
Buddhists ...	...	...	...	...	...	...	...	...	...	...	..
Other Classes ...	...	...	...	...	...	...	...	...	...	...	...
Total.....	115	39	8	7	6	10	7	11	9	18	115

Resolution.—Approved.

List of Agreements entered into by the President.

4. List of agreements entered into by the President during the month of September 1880 :—

No.	Subject.
1	Agreement executed by Amir Saib for constructing a tunnel in the road running through the bed of the Sampangi tank.
2	Do do by Muniyappa Mestri for extending Rails at Bund of No. 1 Reservior, Avenue Road.

Resolution.—Approved.

List of Estimates sanctioned by the President.

5. List of Estimates sanctioned by the President during the month of September 1880.

Estimates No.	Name of Work.	Amount sanctioned.		
32	Estimate for repairing the Old Motucheri Tannah	125	0	0
	Total Rs.....	125	0	0

Resolution.—Approved.

Tenders for Lighting.

6. Read—Proceedings of last month relating to the disposal of tenders for lighting the Cantonment for the next 3 years.

The President having read the report of the Lighting Committee observed that the only suggestions of the Committee on which he thought it necessary to offer any remarks were that the lights should in future be maintained at an average brilliancy equal to that of 9 candles, and that the lighting contract should be given only for one year at a time: as regards the former suggestion the President was of opinion that by means of the photometer, now exhibited, the working of which seemed very simple, the power of the lights could be accurately tested and he would recommend therefore that the Committee's suggestions on this point should be adopted; as regards their recommendation to limit the time of the contract to one year he was of opinion that no person would consent to take the contract for so short a period nor would such an arrangement be fair to the contractor seeing the outlay that would in the first instance be necessary in providing the requisite amount of plant, &c., he was of opinion therefore that the contract should always be given as at present for at least 3 years; he also remarked that the present tenders now under consideration had all been submitted on the understanding that the contract would continue in force for a period of 3 years and that if the suggestions therefore of the Committee were approved of, it would be necessary either to invite fresh tenders for which there was really now no time, as the present contract expired on the 31st December, or to enter into an arrangement with the present contractor for the extension of his contract for another year. The sense of the meeting being unanimous in favor of the latter suggestion it only remained to determine the rate at which the contract should be renewed; the President proposed as it was found that the lamps would not burn for 8 consecutive hours without being trimmed and turned up, that the time of lighting should be restricted to 6 hours instead of 8 as at present, and suggested that the rate to be allowed to the contractor for each lamp per mensem should be Rs. 1—6—0. Captain Curley observed that from experiments he had carried out he was of opinion that the lighting, if maintained at a brilliancy equal to 9 candles as now proposed, could not be done under Rs. 1—8—0 per mensem; Mr. Lee who had also of late taken a considerable interest in the lighting question, having expressed himself as being of the same opinion, Captain Curley proposed the following resolution and which, having been seconded by Mr. R. P. Campbell, was put to the vote and carried by a majority of all the Commissioners present with the exception of Mr. T. T. Leonard, who dissented on the ground that in his opinion Rs. 1—4—0 per mensem would be sufficient and would leave an ample margin of profit to the contractor.

Resolution.—That the contract for lighting the Cantonment be renewed to the present contractor for a further period of one year at Rs. 1—8—0 per lamp per mensem and that the new contract should provide that the lamps be lit for 6 hours nightly and be maintained at an average brilliancy equal to 9 candles, failing in which the contractor will be liable to such fine as may be determined upon.

Plan and estimate of additional buildings for the Municipal Office.

7. Plan and estimate for the additional Municipal Offices proposed to be constructed contiguous to the Mayo Memorial Hall.

Resolved.—That the buildings should be constructed of brick in mortar instead of brick in mud as at present proposed and that the exterior of the building be designed so as to be more in keeping with the architecture of the Mayo Hall.

Reducing the license fee on Potteries.

8. Read—Proceedings of the Chief Commissioner of Mysore, No. 3688—Ml. 199, dated 28th September 1880, relating to potteries.

Resolution.—To be recorded.

Committee's charges for Lighting Experiments.

9. Read.—Proceedings of the Chief Commissioner of Mysore, No. 3791-2—208, dated 1st October 1880, sanctioning a grant of Rs. 150 applied for to defray Committees' charges for lighting experiments.

Resolution.—To be recorded.

Budget for 1881—82.

10. Read—List of proposed works for insertion in the Budget for the official year 1881—82.

Resolution.—That the Municipal Executive Engineer be directed to prepare estimates of the works proposed to be entered in the Budget for the ensuing year, and that the lists be then submitted to a Committee of the Board for consideration and report; the Committee to be composed of the President and one Municipal Commissioner from each Division as under and to assemble at such time and place as the President may determine:—

V. Sadasiva Modaliar, Esq.	Abdul Kudus Khadri Khaji Saib, Esq.
Standish Lee, Esq.	T. T. Leonard, Esq.
Abdul Husen Saib, Esq.	G. G. Brown, Esq.

Compensation for ground for the construction of Mutton Stalls at Alsur and for houses to be taken up at Gangamacherri for the excavation of laterite.

11. Compensation for ground required to be taken up for the construction of additional mutton stalls at the Alsur Market and for houses to be taken up at Gangamacherri for the excavation of laterite.

Resolved.—That the compensation be issued to the holders of houses required to be taken up.

The 15*th November* 1880.

Memo of propositions to be laid before the next meeting of the Town Municipal Commission, to be held at their Office Premises, Bangalore Taluk Cutcherry, on Tuesday the 30th November 1880 at 7½ A. M.

1. The usual monthly accounts and mortuary return for the month of October 1880.

2. Sub-committee's report on the Budget works proposed to be carried out during the ensuing official year 1881—82.

Deferred Proposition.

3. Proceedings of the Chief Commissioner of Mysore, No. 3548-49—Ml. 187, dated 16th September 1880, sanctioning the estimate amounting to Rs. 1,660 for the construction of a fish and poultry market in the Pettah.

J. H. ORR,
President, Town & Cantt. Ml. Commns.

NUNDYDROOG DIVISION.

IN THE COURT OF DISTRICT JUDGE, NUNDYDROOG DIVISION.

Application No. 394 *of* 1880.

Chinnaiya of Kottamangala, Mulbagal Taluk .. .. *Applicant.*

In the matter of the estate of the late Kottamangala Ramappa.

Whereas Chinnaiya, grandson of the deceased above named, has applied to this Court for letters of administration in respect of the, estate of the said deceased who died in Kottamangala in Mulbagal Taluk, and the 10th day of December 1880 at 10 A. M. has been fixed for the hearing of the application.

All persons claiming to have any interest in the estate of the deceased are hereby called upon to come and see the proceedings on or before the said 10th day of December 1880.

Given under my hand and the seal of the Court this 10th day of November 1880.

IN THE COURT OF THE DISTRICT JUDGE, NUNDYDROOG DIVISION.

The 17th November 1880.

In pursuance of orders of this Court made in the matter of the undermentioned insolvent debtors, it is ordered that the said debtors be declared insolvents under the provisions of Section 351, Chapter XX of the Code of Civil Procedure, in respect of all the debts mentioned in their schedules :—

No. of the Case.	Names of Insolvents.	Dates on which orders were passed.
277 of 1880 ..	Krishnaji Bhimaji *alias* Krishna Rao ..	1st October 1880.
296 do ..	C. Rangaiya Naidu	Do do.
299 do ..	Nalband Bavadin	Do do.
324 do ..	Mr. B. J. Woutersz	11th November do.
327 do ..	Vizemahomedkhan and Boyzidkhan	15th October do.
329 do ..	Mr. A. F. M. Birch	29th do

T. R. A. THUMBOO CHETTY,
District Judge.

BANGALORE DISTRICT.

NOTIFICATION.

The 1st November 1880.

Notice is hereby given that sealed tenders will be received up to 1st December 1880, by the Superintendent of the Central Jail, for the supply by contract of all articles of diet, &c., required for the use of the prisoners confined in the Bangalore Central Jail and District Lock-up.

2. No tenders will be received after the date above mentioned.

3. Tenders to be superscribed "Tenders for the supply of provisions for the Central Jail and District Lock-up."

4. No tenders will be received unless accompanied by a deposit of Rs. 500 in cash or currency notes.

5. Tenders will be opened by the Superintendent, Central Jail, at his Office on the date above named, in the presence of such tenderers as may choose to attend.

6. All tenders must specify the rate at which the following articles can be supplied in pound weights per rupee :—

Rice, 1st and 2nd sort ..	Salt ..	Coffee
Ragi do ..	Curry-powder ..	Tea
Dál do ..	Onions ..	Bread
Ballar ..	Garlic ..	Milk
Meat ..	Vegetables ..	Soap-nut
Tyre ..	Firewood ..	Soap
Gingelly-oil ..	Gram ..	Marking-nut
Ghee ..	Soji ..	Pepper
Tamarind ..	Sugar ..	

7. The rates tendered must, besides the articles specified above, include lamp-oil, earthen plates, lotas, brooms, &c. The contractor will supply ragi grain to be ground by convicts, and it will be issued as flour. The supply will be calculated and payment made upon the quantity so issued at the price of ragi grain.

8. The probable requirements of the chief articles for the year will be (for 900 convicts on various scales) as under :—

Ragi	(lbs)	416,667	Gingelly-oil	(lbs)	2,833
Rice	,,	94,167	Salt	,,	12,500
Dál or ballar	,,	62,500	Curry-powder	,,	9,583
Vegetables	,,	125,000	Onions	,,	12,500
Meat	,,	28,333	Firewood	,,	500,000
Ghee	,,	2,833			

9. The Superintendent reserves to himself the right of rejecting any tender without assigning any reason for so doing.

10. The deposit of the successful competitor will be retained, and will be forfeited if he fails to execute the contract bond or to furnish security to the amount of Rs. 1,500 in cash or Government bonds within one week from the date of the acceptance of his contract being made known to him.

11. No advance of cash will be made to the contractor. Payments for the articles supplied will be made by the Superintendent, Central Jail, as soon as possible after the 1st of each month.

12. A store-room will be made over to the contractor in which he can keep all non-perishable articles. Perishable articles, such as meat, &c., must be at the Jail by 8 A. M. daily.

13. The contract must not be sublet.

14. A fine not exceeding Rs. 150 will be levied at the discretion of the Superintendent of the Central Jail for any infringement of the stipulation of the contract, or for the supply of any inferior articles, and if frequently violated, the contract may be annulled and the security confiscated to Government.

15. The decision of the Superintendent of the Central Jail to be final in all questions of infringement of contract.

16. The contractor will be bound to purchase vegetables from the jail garden for the use of the prisoners at the same rate as in the contract.

17. Any further information can be obtained by applying at the Superintendent's Office.

18. This contract will be subject to the confirmation of the Inspector General of Prisons in Mysore.

J. HENDERSON, M. D.,
Supt., Central Jail.

NOTICE.

200 *Rs. Reward.*

A reward of Rs. 200 is offered to any person, for such information as may lead to the detection and conviction of the person or persons concerned in the theft of Rs. 1,875—10—4 from the cash chest of the Imperial Post Office on the night of the 4th September 1880.

E. HEWETSON,
District Supt. of Police,
Town & Cantt. of Bangalore.

KOLAR DISTRICT.

NOTIFICATIONS.

The 15th November 1880.

Notice is hereby given that sealed tenders will be received up to 9 A. M. on Wednesday the 15th December 1880, by the Superintendent of the Kolar District Jail at Kolar, for the supply by contract of all articles of diet, &c., required for the use of the prisoners confined in the Kolar District Jail, from 1st January to 31st December 1881, both days inclusive.

2. No tenders will be received after the date and hour above named.

3. Tenders to be superscribed, "Tenders for the supply of provisions for the Kolar District Jail."

4. No tenders will be received unless accompanied by a deposit of Rs. 50—0—0 in cash or currency notes.

5. Tenders will be opened by the Superintendent of the District Jail at Kolar in the Jail Office on the date above named in the presence of such tenderers as may choose to attend.

6. All tenders must specify separately the rate per convict per diem for the following classes, *viz* :—

	Rs.	A.	P.
Native laboring males			
Do short-term do			
Do non-laboring males, and females and under-trial ..			
Do juveniles			
European and East Indians			

7. The rates tendered must, besides the articles specified in the undermentioned diet scale, include hospital diet (as per scale), extra to sick, and perishable articles, lamp-oil, lanterns, and repairing the same, copper and earthen cooking vessels and plates for convict messes, baskets for latrine and dry earth, sigékayi for bathing of the convicts in jail, all repairing and tinning of copper utensils, brooms, pots for drinking purposes, milk, bread, sugar, &c., required for children of female convicts, sulphur for fumigating cells, fuller's earth and all other sundry articles exclusive of clothing required to be supplied regularly for the use of the prisoners.

8. The Superintendent reserves to himself the right of rejecting any tender without assigning any reason for so doing.

9. The deposit of the successful tenderer will be retained, and will be forfeited if he fails to execute the contract bond and to furnish security to the amount of Rs. 500—0—0 in cash or Government bonds within one week from the date of the acceptance of his contract being made known to him.

10. No advance of cash will be made to the contractor. Payment for the articles supplied will be made by the Superintendent of the District Jail, as soon as possible, after the 1st of each month.

11. A store room will be made over to the contractor in which he can keep all non-perishable articles. Perishable articles such as meat, &c, must be at the Jail by 7—15 A. M. daily.

12. The contract must not be sublet.

13. A fine not exceeding Rs. 25—0—0 will be levied at the discretion of the Superintendent of the Jail for any infringement of the stipulations of the contract or for the supply of any inferior articles, and if frequently violated, the contract may be annulled and the security confiscated to Government.

14. The decision of the Superintendent of the Jail to be final in all questions of infringement of contract.

15. The contractor will be bound to purchase vegetables from the jail garden for the use of the prisoners at a fixed rate of 4 pies per lb.

16. The contract is subject to the confirmation of the Inspector General of Prisons.

17. Any further information can be obtained by applying to the Superintendent of the Kolar District Jail from 7 to 9 A. M. on any day.

Table of Diet for all Classes of Native Prisoners in the Kolar District Jail.

Names of Articles.	B Scale for men sentenced to more than 6 months and up to 2 years' rigorous imprisonment.							Men sentenced to rigorous imprisonment for 6 months and under.							Simple—women, and under-trial.							Juvenile Prisoners.						
	Monday.	Tuesday.	Wednesday.	Thursday.	Friday.	Saturday.	Sunday.	Monday.	Tuesday.	Wednesday.	Thursday.	Friday.	Saturday.	Sunday.	Monday.	Tuesday.	Wednesday.	Thursday.	Friday.	Saturday.	Sunday.	Monday.	Tuesday.	Wednesday.	Thursday.	Friday.	Saturday.	Sunday.
	oz	oz	oz	oz	oz	oz	oz	oz	oz	oz	oz	oz	oz	oz	oz	oz	oz	oz	oz	oz	oz	oz	oz	oz	oz	oz	oz	oz
Rice ...	...	12	...	12	...	12	..	...	12	...	...	...	12	...	..	...	..	...	...	...	20	...	10	...	...	...	10	..
Ragi ...	24	12	24	12	24	12	24	24	12	24	24	24	12	24	20	20	20	20	20	20	...	20	10	20	20	20	10	20
Dal or ballar ...	4	2	4	2	4	2	4	3	2	3	3	3	3	3	2	2	2	2	2	2	2	2	2	2	2	2	2	2
Meat (with bone.)	...	3	...	3	...	3	...	...	4	...	...	...	...	...	..	...	...	...	...	...	...	...	3	...	...	...	3	...
Tyre ...	...	8	...	8	...	8	..	..	...	...	...	...	...	...	...	8	...	...	...	8	...	...	5	...	...	...	5	...
Gingelly-oil ...	...	$\frac{1}{4}$	...	$\frac{1}{4}$	...	$\frac{1}{4}$	$\frac{3}{8}$	$\frac{1}{8}$	$\frac{1}{8}$	$\frac{1}{8}$	$\frac{1}{8}$	$\frac{1}{8}$	$\frac{1}{8}$	$\frac{1}{8}$	$\frac{1}{8}$	$\frac{1}{8}$	$\frac{1}{8}$	$\frac{1}{8}$	$\frac{1}{8}$	$\frac{1}{8}$	$\frac{1}{8}$	...	$\frac{1}{16}$	$\frac{1}{16}$	$\frac{1}{16}$	...	$\frac{1}{16}$	$\frac{1}{16}$
Ghee ...	$\frac{3}{8}$	...	$\frac{3}{8}$	...	$\frac{3}{8}$	...	..	...	...	...	...	...	...	...	...	...	...	...	...	...	...	$\frac{1}{8}$	...	...	...	$\frac{1}{8}$	...	...
Tamarind ...	$\frac{1}{2}$	$\frac{1}{2}$	$\frac{1}{2}$	$\frac{1}{2}$	$\frac{1}{2}$	$\frac{1}{2}$	$\frac{1}{2}$	$\frac{1}{2}$	$\frac{1}{2}$	$\frac{1}{2}$	$\frac{1}{2}$	$\frac{1}{2}$	$\frac{1}{2}$	$\frac{1}{2}$	$\frac{1}{2}$	$\frac{1}{2}$	$\frac{1}{2}$	$\frac{1}{2}$	$\frac{1}{2}$	$\frac{1}{2}$	$\frac{1}{2}$	$\frac{3}{8}$	$\frac{3}{8}$	$\frac{3}{8}$	$\frac{3}{8}$	$\frac{3}{8}$	$\frac{3}{8}$	$\frac{3}{8}$
Salt ...	$\frac{3}{4}$	$\frac{3}{4}$	$\frac{3}{4}$	$\frac{3}{4}$	$\frac{3}{4}$	$\frac{3}{4}$	$\frac{3}{4}$	$\frac{5}{8}$	$\frac{5}{8}$	$\frac{5}{8}$	$\frac{5}{8}$	$\frac{5}{8}$	$\frac{5}{8}$	$\frac{5}{8}$	$\frac{5}{8}$	$\frac{5}{8}$	$\frac{5}{8}$	$\frac{5}{8}$	$\frac{5}{8}$	$\frac{5}{8}$	$\frac{5}{8}$	$\frac{1}{2}$	$\frac{1}{2}$	$\frac{1}{2}$	$\frac{1}{2}$	$\frac{1}{2}$	$\frac{1}{2}$	$\frac{1}{2}$
Curry powder ...	$\frac{3}{8}$	$\frac{3}{8}$	$\frac{3}{8}$	$\frac{3}{8}$	$\frac{3}{8}$	$\frac{3}{8}$	$\frac{3}{8}$	$\frac{5}{16}$	$\frac{5}{16}$	$\frac{5}{16}$	$\frac{5}{16}$	$\frac{5}{16}$	$\frac{5}{16}$	$\frac{5}{16}$	$\frac{5}{16}$	$\frac{5}{16}$	$\frac{5}{16}$	$\frac{5}{16}$	$\frac{5}{16}$	$\frac{5}{16}$	$\frac{5}{16}$	$\frac{5}{16}$	$\frac{5}{16}$	$\frac{5}{16}$	$\frac{5}{16}$	$\frac{5}{16}$	$\frac{5}{16}$	$\frac{5}{16}$
Onions ...	$\frac{1}{2}$	$\frac{1}{2}$	$\frac{1}{2}$	$\frac{1}{2}$	$\frac{1}{2}$	$\frac{1}{2}$	$\frac{1}{2}$	$\frac{1}{2}$	$\frac{1}{2}$	$\frac{1}{2}$	$\frac{1}{2}$	$\frac{1}{2}$	$\frac{1}{2}$	$\frac{1}{2}$	$\frac{1}{2}$	$\frac{1}{2}$	$\frac{1}{2}$	$\frac{1}{2}$	$\frac{1}{2}$	$\frac{1}{2}$	$\frac{1}{2}$	$\frac{1}{2}$	$\frac{1}{2}$	$\frac{1}{2}$	$\frac{1}{2}$	$\frac{1}{2}$	$\frac{1}{2}$	$\frac{1}{2}$
Garlic ...	$\frac{1}{16}$	$\frac{1}{16}$	$\frac{1}{16}$	$\frac{1}{16}$	$\frac{1}{16}$	$\frac{1}{16}$	$\frac{1}{16}$	$\frac{1}{32}$	$\frac{1}{32}$	$\frac{1}{32}$	$\frac{1}{32}$	$\frac{1}{32}$	$\frac{1}{32}$	$\frac{1}{32}$	$\frac{1}{32}$	$\frac{1}{32}$	$\frac{1}{32}$	$\frac{1}{32}$	$\frac{1}{32}$	$\frac{1}{32}$	$\frac{1}{32}$	$\frac{1}{64}$	$\frac{1}{64}$	$\frac{1}{64}$	$\frac{1}{64}$	$\frac{1}{64}$	$\frac{1}{64}$	$\frac{1}{64}$
Vegetables ...	6	6	6	6	6	6	6	6	6	6	6	6	6	6	6	6	6	6	6	6	6	5	5	5	5	5	5	5
Firewood* ...	$1\frac{1}{2}$ or 2 lbs daily.							$1\frac{1}{2}$ or 2 lbs daily.							$1\frac{1}{2}$ or 2 lbs daily.							$1\frac{1}{2}$ or 2 lbs daily.						

* Where closed fireplaces are in use, $1\frac{1}{2}$ lbs. of firewood will be served out; where open fireplaces 2 lbs.

Men who do not eat meat to get 4 ozs. of dál and 8 drams of ghee on meat days. 2 drams of salt to be issued and eaten when sprinkled over the food.

Men who do not eat meat to get 3 ozs. of dál and 8 drams of ghee on meat days.

Women and juveniles to get tyre if sentenced over 6 months; under-trial prisoners, tyre and meat if over 2 months in confinement.

Rice may be given entirely to any under-trial prisoner unaccustomed to ragi and to any one whom ragi disagrees with, at the recommendation of Medical Officer; juveniles under 14 years to get 16 ozs. of grain and 2 ozs. of meat.

412

Scale of Diet Hospital.

Articles of Diet.	Monday.		Tuesday.		Wednesday.		Thursday.		Friday.		Saturday.		Sunday.	
	oz.	dr.	oz.	dr.	oz.	dr.	oz.	dr.	oz.	dr.	oz.	dr.	oz.	dr.
Rice	20	..	20	...	20	...	20	...	20	...	20	...	20	...
Ragi	...	...	...	...	...	...	...	...	...	...	...	...	...	...
Dal or ballar	3	...	2	...	3	...	2	...	3	...	2	...	3	...
Meat (with bones)	...	...	3	...	..	...	3	...	...	...	3	...	...	...
Tyre	...	...	8	...	...	..	8	...	...	...	8	...	...	...
Gingelly oil	...	...	...	4	...	...	...	4	...	...	...	4	...	4
Ghee	...	4	..	...	...	4	...	...	...	4	...	...	...	...
Tamarind	...	8	...	8	...	8	...	8	...	8	...	8	...	8
Salt	...	10	...	10	...	10	...	10	...	10	...	10	...	10
Curry powder	...	6	...	6	...	6	...	6	...	6	...	6	...	6
Onions	...	8	...	8	...	8	...	8	...	8	...	8	...	8
Garlic	...	1	...	1	...	1	...	1	...	1	...	1	...	1
Vegetables	4	...	4	...	4	...	4	...	4	...	4	...	4	...
Firewood	$1\frac{1}{2}$ or two lbs. daily.													

Men who do not eat meat to get 3 ozs. of dal, 8 ozs. of tyre and 4 dr. of ghee on meat days.

Articles comprising the different head of diets per day for sick in Jail Hospital in cases where they are absolutely required.

Spoon.		Milk.		Low.		Full.	
Ságu ...	4 oz.	Bread ...	12 oz.	Mutton in broth ...	6 oz.	Mutton for curry ...	8 oz.
Sugar ...	2 „	Rice ...	12 „	Bread ...	12 „	Rice ...	8 „
Milk ...	6 „	Milk ...	2 pts.	Butter or ghee ...	1 „	Curry powder ...	$\frac{1}{2}$ „
Rice ...	2 „	Sugar ..	2 oz.	Onions ...	1 „	Country vegetables ...	4 „
Salt ...	2 dr.	Rice for cunjee	2 „	Flour ...	$\frac{1}{2}$ „	Hoppers	No. 6
		Salt ...	2 dr.	Salt ...	1 „	Butter or ghee ...	1 „
						Salt ...	1 „

A. RANGASAMAIENGAR,
Supt., District Jail.

TUMKUR DISTRICT.

The 8th November 1880.

NOTICE UNDER SECTION 354 OF THE CODE OF CIVIL PROCEDURE.

It is hereby declared that the undermentioned person is an insolvent and as such entitled to the benefit of the provisions of Chapter XX of the Code of Civil Procedure, and it is ordered that the said insolvent be and is hereby discharged from custody and from all liability to be arrested or imprisoned in respect of any of the debts mentioned in the schedule filed with records of the case concerned.

Kumbar Siddappa .. In Insolvent Case No. 12 of 1880.

E. CHITAMBRAM IYER, *Subordinate Judge.*

NAGAR DIVISION.

NOTIFICATION.

The 12th November 1880.

The right, title and interest of 1. Kannamma, 2. Seshachala Naidu and 3. Changalraya Naidu, widow and sons, respectively, of the late Singappa Naidu, in a stamped and registered bond dated 15th July 1878, executed to them by Mr. Meppen of the Harobidkol estate, promising to pay to their creditor Gramada Narasimhachar Rs. 17,000 in satisfaction of a decree, will be sold at Shimoga on the 10th December 1880 by the Nazir of the District Court, the said document having been attached in execution of the decree passed in the Court of the Commissioner, Nagar Division, in O. S. No. 1 of 1878.

The document is in the District Judge's Court. No claims have been preferred to it.

T. CLARKE, *District Judge.*

COORG.

NOTIFICATION.

The 11th November 1880.

Notice is hereby given for general information that the arrears due on the undermentioned coffee estates in Coorg being still unpaid, they will be put up to public auction at the 2nd Assistant Superintendent's Office at Mercara, at noon on Monday the 20th December 1880, and sold to the highest bidder above the upset price.

Survey No.	Title-deed No.	Name of Defaulter.	Name of Estate.	Village, Nad and Taluk.	Area.	Boundaries.				Assessment for 1879-80.			Costs and Charges.			Total.		
						North.	South.	East.	West.									
109	114	Mr. W. V. Drummond.	Lilford ...	Hakatur Village in Kaggodlunad of the Mercara Taluk.	113·93	Iyappa Davu ...	Government bâne ...	B. Bopu's... ...	Government bâne ...	227	13	8	4	4	6	232	2	2
729	131	Mrs. Annie Margaret Fowler.	Glen Moriston	Heggal in Yedenalknad of the Yedenalknad Taluk	282·81	Fowler estate 3rd part Government bane.	Fowler's jungle Bradford ...	Fowler's jungle and Rose's jungle	Fowler's jungle ...	565	9	11	4	4	6	569	14	5

N. B.—The purchaser will be subject to pay the assessment for the current year *viz.*, 1880—81.

Conditions of sale.—Para.—1. The highest bidder will be the purchaser subject to confirmation of sale, provided he deposit 25 per cent of the purchase money immediately; should he fail to make such deposit the lot will be put up again.

2. The balance of the purchase money must be paid before noon of the 30th day from the date of sale, but if that day happens to be a Sunday or holiday the payment must be made before noon on the next office day.

3. Should the purchaser fail to pay the balance of the purchase money within the time fixed, the sale will be cancelled, the deposit will be forfeited and the land may be again put up to auction. The defaulting purchaser will be liable for any deficiency in the amount realized by the re-sale, and in the calculation of such deficiency the deposit that has been forfeited shall not be reckoned. The defaulting purchaser at the first sale shall moreover have no claim to any surplus that may be realized by the re-sale.

4. Any amount due from a defaulting purchaser may be recovered under the rules or practice in force for the recovery of arrears of land revenue.

5. All sales and re-sales shall be subject to confirmation by the Superintendent of Coorg, who may order any sale or re-sale to be cancelled. The decision of the Superintendent is open to revision by the Chief Commissioner and may be modified or reversed by him. If within three months from the date of sale, the Superintendent shall not have reversed the sale or re-sale, the same shall be held to have been confirmed by him.

6. In any case in which a sale or re-sale may be cancelled, the purchaser will receive back the money or deposit paid by him, but will have no claims to interest or damages.

H. G. THOMSON,
Superintendent.

SEASON REPORTS FOR THE MONTH OF OCTOBER 1880.

Túmkúr District.

Rain.—The rain-fall throughout the District was as follows:—

	I.	C.		I.	C.
Túmkúr	7	73	Sira ..	3	38
Koratagere	9	40	Kunigal ..	16	15
Maddagiri	3	11	Kadaba ..	11	40
Chiknayakanhalli ..	4	90	Honnavalli ..	21	20

Weather.—Generally warm followed by rain at nights.

Crops.—Paddy and gram sown during the month, and arecanut, ragi, navane and harka are being harvested.

Public Health—Good. The total number of deaths from all causes amounted to 529 in September against 631 in August.

Cattle.—Loss among cattle was 786 against 1,072 in September 1880.

Lands.—Lands yielding an assessment of Rs. 3,747—1—4 were taken up for cultivation, while none were relinquished.

Prices.—Rice, ragi, dál, ballar, horse-gram, wheat, ghee and jaggory were sold at 12 seers, and 2 chittaks, 37 S.6 C., 18 S. 6 C., 30 S. 4 C., 37 S. 7 C., 8 S., 1 S. 12 C., and 6 S., respectively, per rupee.

E. CHITAMBRAM IYER,
For Dy. Commissioner.

Shimoga District.

Rain-fall.—The rain-fall in the several taluks of the District during the month was as follows *viz*:—

	I.	C.		I.	C.
Shimoga	5	77	Sorab	7	95
Channagiri	5	42	Ságar	7	14½
Honnali	8	62½	Nagar	7	71
Shikarpur	14	78	Kavaledurga ..	7	40

The average readings of the thermometer at Shimoga were 78·83 at 9-30 A. M. and 79·48 at 3-30 P. M.

Lands.—Lands assessed at Rs. 702—9—7 were taken up for cultivation during the month.

Health.—Fairly good.

Cattle.—Murrain and foot and mouth disease very prevalent.

Prices.—Easy.

K. RAMACHANDRA RAO,
For Dy. Commissioner.

Coorg.

Wet land.—The Kartika crop is thriving : ploughing for the Vaisakha crop continues.

Ragi.—Ragi has been reaped and stocked.

Cardamoms.—Cardamoms have been picked, and the out-turn is fair.

Coffee.—Picking of coffee has commenced on a few estates in South Coorg.

Mortality.—The number of deaths amongst the population of the Province in September was 266 against 314 in the same month of last year, and is classified as follows :—

Diarrhœa	..	6	*Taluks.*	
Small-pox	..	2	Mercara ..	.. 55
Fever. ...	..	245	Padinalknad ..	.. 65
Other diseases	..	13	Yedenalknad ..	.. 17
			Kiggatnad ..	.. 30
			Nanjarajpatna ..	.. 46
			Yelsavirshime ..	.. 36
			Towns.	
			Mahadeopet ..	.. 4
			Virarajendrapet ..	.. 13
	Total..	266	Total	.. 266

Of the above, there were 87 males, 72 females and 107 children of the following sects :—

Christians 2 ; Coorgs 51 ; Hindus 161 ; Muhammadans 20 ; Other classes 32 ; Total 266.

Cattle.—The mortality amongst the cattle was 227 against 639 in the same month of last year, and is classified as follows :—

Bulls 62 ; cows 60 ; calves 40 ; he-buffaloes 22 ; she-buffaloes 99 ; calves 24 ; total 227.

Market-rates.—Stationary.

Rain-fall.—Mercara—

		Inches.	Cents.
	In October 1880	10	59
	Total Rain-fall	129	54
Somavarpet—			
	In October 1880 ..	7	34
	Total Rain-fall	95	55

H. G. THOMSON,
Superintendent.

AMRUT MAHAL.

IMPORTANT SALE OF SURPLUS STOCK.

No. 157. *The* 23*rd October* 1880.

The annual sale of cattle will take place at Húnsúr on Thursday, 25th November, and following days.

About 250 head of cattle, bulls, cows, heifers and calves. Many of them are cast on account of color only and are excellent cattle.

Terms—Cash.

By Order of the Commissary General,

H. B. NANGLE, *Major,*
In charge Amrut Mahal.

JUST PUBLISHED.

Super-royal octavo, cloth.

Tribes of the Hindoo Koosh. *Price Rs.* 6 ; *packing and postage*, 6 *anaas.*

Office of Superintendent of Government Printing, 8, Hastings Street, Calcutta.

Select Extra-Tropical Plants readily eligible for industrial culture or naturalization, with indications of their native countries and some their uses, by Baron Ferd. Von Mueller. Indian edition, 1880. *Price Rs.* 4 ; *Packing and postage* 6 *annas.*

Office of Superintendent of Government Printing, 8, Hastings Street, Calcutta.

COMMISSARIAT ADVERTISEMENTS.

The 5th November 1880.

Sealed tenders in the form used in the Commissariat Department will be received by the Executive Commissariat Officer for the supplies entered in the subjoined schedules up to 1 o'clock on the 18th January 1881, and the tenders will be opened at that hour in presence of those interested who choose to attend.

Tender forms and particulars regarding the contract, and the form of contract, can be obtained on application to the Executive Commissariat Officer, Bangalore.

Articles.		Probable Quantity.	Date of Delivery.	To Whom and Place.	Deposit to accompany Tenders.
Line Gear.					Rs.
1. Bags, nose, gunny	No.	2,508	To be supplied from 1st April 1881 to 31st March 1882 in such quantities as may be required.	At the Commissariat Stores to the Commissariat Officer or Serjeant in charge of Barrack Stores.	40
Do canvas	,,	25			
2. Brushes, horse	,,	1,581			70
Curry combs	,,	315			
3. Charcoal (for harness rooms)	lbs.	2,640			5
4. Blankets, horse	No.	400			105
5. Dusters	,,	3,146			
Dubbing	lbs.	600			45
6. Eye fringes	No.	843			
Ropes, head, with loop and hook, length 7 feet exclusive of loop	,,	1,568			220
Ropes, heel, length 15 feet, exclusive of loop	,,	2,048			
Rollers with pad, the latter made of leather	,,	115			
7. Buckets, wooden, water	,,	84			
Ropes, picketting	,,	5			10
(All according to pattern)					

N. B.—The ropes are to be made of hemp.

Articles.	Probable Quantity.	Date of Delivery.	To Whom and Place.	Deposit to accompany Tenders.
Purchase of empty hogsheads to be taken with all faults and the expense attending their removal to be borne by the contractor. No.	1,623	Such numbers as may be emptied monthly and are available from 1st April 1881 to 31st March 1882. The Commissariat Officer reserves the right of retaining any number of Hogsheads he requires.	Delivery to be taken at the Commissariat Stores, Bangalore, by the contractor every fifteen days, and payment to be made before removal.	Rs. 500
Commissariat Auctioneer (rate per cent)	To sell all such serviceable or unserviceable articles, cattle, horses, &c., as may be made over to him for the purpose.	From 1st April 1881 to 31st March 1882, all articles, cattle, horses, &c., to be sold for cash except cast horses to officers in the service, payment for which may be recovered through the Pay Department. The auctioneer will be bound to furnish account sales in duplicate in the required form and to pay the proceeds of the sale to the Commissariat Officer within 15 days from the date of sale.	To be sold at the Commissariat Stores, Bangalore, the Public Cattle Lines, or at such places as may be ordered by the Executive Commissariat Officer, Bangalore.	250

The 13th November 1880.

Sealed tenders in the form used in the Commissariat Department will be received by the Executive Commissariat Officer for the supplies entered in the subjoined schedule up to 1 o'clock on the 22nd January 1881, and the tenders will be opened at that hour in presence of those interested who choose to attend.

Tender forms and particulars regarding the contract, and the form of contract, can be obtained on application to the Executive Commissariat Officer, Bangalore.

Articles.		Probable Quantity.	Date of Delivery.	To Whom and Place.	Deposit to accompany Tenders.
Feed of Commissariat's Cattle.					Rs.
1. Rice, 3rd sort of elephant	lbs.	69,350	In such quantities as may be required from 1st April 1881 to 31st March 1882.	At the Public Cattle Lines to the Public Cattle Purveyor.	100
Oil, gingelly for do	,,	365			
Salt, common do and mules	,,	1,690			
2. Firewood, dried in billets, not exceeding 18 inches in length and 2 inches in thickness for boiling gram for the mules	,,	73,000			15

Articles.		Probable Quantity.	Date of Delivery.	To Whom and Place.	Deposit to accompany Tenders.
Gear for Elephants.			To be delivered in September 1881.	At the Public Cattle Lines to the Warrant or Non-Commissioned Officer in charge.	Rs.
3. Girth, ropes	No.	8			10
Load, ropes	,,	8			
Rice, bags	,,	8			
Saddles, complete with jhools	,,	8			
Gear for Camels.					
4. Gram bags	No.	109			90
Head stalls	,,	109			
Load, ropes	,,	109			
Saddles, complete	,,	109			
Saleetahs	,,	109			
Gear for Mules.			To be delivered whenever required during the year 1881—82.		
5. Head stalls, leather	,,	100			50
Nose bags, leather	,,	100			
Loading ropes, coir	,,	100			
Saleetahs, gunny	,,	100			
Girth for saddlers	,,	202			
Ropes, picketting, coir	Yards.	100			
Peys, iron	No.	8			
Mallets, iron	,,	4			
Curry combs	,,	50			
Coir hand rubbers	,,	50			
Iron pickers	,,	50			
Kettles, gram	,,	5			
Baskets, bamboo	,,	30			
5*a*. Pack saddles for bullocks	No.	109			140
Gear for Artillery Bullocks.					
6. Feeding gunny, 18 by $1\frac{1}{2}$	Feet.	63			10
Picketting ropes, coir $2\frac{1}{2}$ inches diameter	,,	126			
Cotton loading ropes, $1\frac{1}{4}$ inch diameter	,,	504			
Cotton nose ropes, 1 inch diameter	,,	252			
Buckets, wooden	No.	1			
Full-sized cumbly jhools	,,	21			
Pickets, wooden	,,	11			
Hand rubbers	,,	9			
Grass knives	,,	9			
Wh ps	,,	9			
Skins for soaking gram	,,	3			
Baskets, bamboo, large	,,	6			
Do small	,,	6			
Iron measures	,,	3			
Sieves	,,	3			

Articles.		Probable Quantity.	Date of Delivery.	To Whom and Place.	Deposit to accompany Tenders.
7. Damachusots	No.	50	To be delivered whenever required during the year 1881—82.	At the Public Cattle Lines to the Warrant or Non-Commissioned Officer in charge.	45
Bays, gunny	,,	100			
Leather buckets, complete	,,	2			
Well ropes, large 50 yards in length, 2½ inches diameter	,,	6			
Well ropes, small, 50 yards in length, 1½ inch diameter	,,	6			
Rollers, large	,,	1			
Rollers, small ..	,,	1			
Ropes, coir, for bullocks carts, ¾ inches in diameter, 32 yards in length	,,	76			
Ropes, coir, for trollers, ¾ inch diameter, 32 yards in length	,,	24			
Ropes for mule-carts, 15 yards in length, ¾ inch diameter	,,	32			
Ropes for yokes for bullock-carts	,,	114			
Padlocks, iron	,,	220			
8. For shewing articles and sick cart-bullocks	,,	2,808	From 1st April 1881 to 31st March 1882.		50
9. Belamy	lbs.	50	To be delivered whenever required during the year 1881—82.		25
Googul	,,	20			
Rail	,,	25			
Sowhaga ..	,,	20			
Moosamber ..	,,	20			
Shemruff ..	,,	15			
Urthal	,,	20			
Ahfume ..	,,	15			
Peplamode ..	,,	25			
Jaggory.. ..	,,	60			
Jawalgatta ..	,,	20			
Lassoon ..	,,	50			
Uldhu	,,	50			
Gudgi kai ..	,,	15			
Piplee	,,	30			
Kalijira.. ..	,,	35			
Chirayath ..	,,	30			
Bachadung ..	,,	30			
Inderjan ..	,,	40			
Lalmirchi ..	,,	30			
Ujwan	,,	50			
Hing	,,	20			
Earah kash ..	,,	30			
Kali mirchi ..	,,	50			
Wheat flour ..	,,	20			
Arrack	,,	15			
Gingelly oil ..	,,	120			
Camphor ..	,,	60			
Pulukari ..	,,	10			
Zungul . ..	,,	15			
Carbolic acid ..	,,	10			
Dikkavale .	,,	15			

Articles.		Prabable Quantity.	Date of Delivery.	To Whom and Place.	Deposit to accompany Tenders.
Bees wax ..	lbs.	60	To be delivered whenever required during the year 1881—82.	At the Public Cattle Lines to the Warrant or Non-Commissioned Officer in charge.	
Huldah ..	,,	10			
Miskah.. ..	,,	10			
Peeaz	,,	10			
Sugar	,,	60			
Salt	,,	60			
Tamarind ..	,,	20			
Dhai.. ..	,,	30			
Green ginger ..	,,	25			
Saltpetre ..	,,	30			
Ghee ..	,,	40			
Paraka ka khak ..	,,	30			
Gundusk ..	,,	15			
Ginger.. ..	,,	50			
Catecha ..	,,	20			
Chack powder ..	,,	15			
Boiled rice ..	,,	100			
Turmurick ..	,,	40			
Dammer ..	,,	35			
Grease ..	,,	840			
Mustard seeds ..	,,	60			
Suna leaves ..	,,	35			
Aloes	,,	30			
Milk	,,	100			
Shorah ..	,,	20			
Green ginger ..	,,	60			
Bhang.. ..	,,	50			
Alum	,,	30			
Cloves. ..	,,	30			
Kootakee ..	,,	60			
Hirabal ..	,,	35			
Korasimagwan ..	,,	25			
Black pepper ..	,,	60			
Butch.. ..	,,	50			
Sohufe ..	,,	50			
Sour milk ..	,,	100			
Parah.. ..	,,	50			
Cheroiytha ..	,,	60			
Plantains ..	,,	1,000			
Choke ..	,,	60			
Gundbedi ..	,,	50			
Castor oil ..	,,	300			
Hemp balls ..	,,	300			
Lamp oil ..	,,	250			
Twine	,,	100			
Tar, country ..	,,	10			

By Order of the Commissary General,

B. W. MAGRATH, *Colonel,*
Asstt. Commissary General.

POSTAL NOTICE.

The 19th November 1880.

Table shewing the latest hours for posting letters, &c., at the General Post Office, the Receiving Houses and Pillar Boxes in Bangalore from the 20th November 1880.

Locality of the General Post Office, Receiving Houses and Pillar Boxes.	Local Delivery.				Out-going Mails.			
	1st or 7—30 A. M. Delivery of covers posted in Bangalore and received from the Stations given in Column 4.		2nd or 4 P. M. Delivery of covers posted in Bangalore and received from the Stations given in Column 3.		French Rocks, Mysore, Kollegal, Hassan, Húnsúr, Mercara, Ammatti, Puttur, Virarajendrapet, Buntval and Anche Mails by Runner at 7—30 A. M.		Madras, Bombay, Calcutta and all Stations except those in the preceding Column. By Train at 7—45 P. M.	
	A.	M.	P.	M.	A.	M.	P.	M.
General Post Office, High Ground	6	30	3	30	6	30	6	0
							6	30 On Overland days.
Receiving House No. 1, Pettah Bazar Road ...	5	30	3	0	5	30	5	0
Do No. 2, General Bazar, Narayana Pille Street.	5	30	3	0	5	30	5	0
Do No. 3, Shule near Tannah ...	5	30	3	0	5	30	5	0
Do No. 4, Alsur do ...	5	30	3	0	5	30	5	0
Pillar Box No. 1, General Bazar, Commercial Street.	5	15	2	45	5	15	4	45
Do No. 2, High Ground Tannah ...	5	30	3	0	5	30	5	0
Do No. 3, Sapper Guard Room ...	5	15	2	45	5	15	4	45
Do No. 4, Railway Crossing... ...	5	30	3	0	5	30	5	0
Do No. 5, Artillery Guard Room ...	5	15	2	40	5	15	4	30
Do No. 6, Alsur Road Hospital ...	5	30	2	45	5	30	4	45
Do No. 7, Lal-Bagh Road Tannah ...	5	15	2	45	5	15	4	45
Do No. 8, Richmond Town	5	30	3	0	5	30	5	0
Do No. 9, Fort Guard Room ...	5	15	2	45	5	15	4	45
Do No. 10, Taragpettah	5	30	2	45	5	30	5	0
Do No. 11, Ball Room	5	45	3	0	5	45	5	0

Receipt of Registered letters and Parcels and for official references.	General Post Office.	On week days except Sundays 7 to 8 A. M. 12 to 5 P. M.
Do do	Receiving Houses.	10-30 A. M. to 4-30 P. M.

J. DIQUE,
Postmaster.

Mysore Government Press, Bangalore.—1880.

THE

MYSORE GAZETTE.

Published by Authority.

BANGALORE, SATURDAY, NOVEMBER 27, 1880.

☞ Separate paging is given to this Part in order that it may be filed as a separate compilation.

PART II.

Notifications by the Judicial Commissioner, &c.

JUDICIAL DEPARTMENT.

IN THE COURT OF THE JUDICIAL COMMISSIONER OF MYSORE AND COORG.

Civil Side.

Rule of Practice No. 34, *dated* 17*th November* 1880.

The Judicial Commissioner directs that the following paragraph be added to the Rule of Practice No. 15:—

2 A. The Bangalore Court of Small Causes shall however be exempted from so much of the preceding paragraph as directs that all moneys received in execution of decree shall be sent in daily to the Treasury. Individual sums in excess of Rs 50 only, if not paid to the judgment-creditor on the day of receipt, shall be sent to the Treasury.

The Judicial Commissioner further directs that the sum of Rs. 500 be entered in paragraph 4 as the limit of the amount which may remain in the hands of the Nazir of the Bangalore Small Cause Court.

NOTIFICATIONS.

The 19*th November* 1880.

The undermentioned persons have been enrolled as 2nd Grade Pleaders in the Courts of Coorg, under the Rules of 23rd December 1879:—

11. D. Subakarnalala ... In the Courts of the Parpattegars and Subedars in Coorg.
12. Periyapatna Puttannaiya ... Do do.

The 20*th November* 1880.

Under Section 33 of the General Stamp Act 1 of 1879, the Court delegates the duty of examining and impounding any instrument under this Section to the Registrar of this Court.

The 22nd November 1880.

The undermentioned gentleman has been enrolled as 1st Grade Pleader in the Courts of Coorg, under the Rules of 23rd December 1879 :—

Mr. A. Srinivasachari .. In the Court of the Judicial Commissioner of Coorg.

J. D. SANDFORD,
Judicial Commissioner.

REVENUE SURVEY AND SETTLEMENT DEPT.

NOTIFICATION.

No. 888. *The 19th November* 1880.

It is hereby notified for public information that Measuring and Classing operations will be conducted in the undermentioned taluks during the field season commencing 1st November 1880 :—

Division.	District.	Taluk.	Probable Date of commencing work.	Remarks.
1	2	3	4	5
		Measurement.		
Nundydroog ..	Bangalore	Devanhalli ..	5th November 1880.	Survey of the channel lands on the Hemavati and Cauvery will be commenced in January 1881.
Do ...	Kolar	Mulbagal	Do	
Do ...	Do	Shrinivaspur ...	1st January 1881	
Do ...	Túmkúr	Kadaba	5th November 1880	
Ashtagram ...	Mysore	Periyapatna ...	1st January 1881	
Do ...	Do	Heggaddevankote ...	Do do	
Do ...	Hassan	Hassan ...	10th November 1880	
Do ...	Do	Channaraypatna ...	8th Do	
Do ...	Do	Nagamangala ...	1st January 1881	
		Classification.		
Nundydroog ...	Túmkúr	Kadaba ...	1st November 1880	
Ashtagram ...	Hassan	Hassan ...	Do do	
Do ...	Do	Manjarabad ...	1st January 1881	

J. P. GRANT,
Supt., Mysore Rev. Survey.

FINANCIAL DEPARTMENT.

FORMS FOR IMPERIAL MONEY ORDER TRANSACTIONS IN TALUKS.

To—The Deputy Commissioners, Treasury Department, Circular No. 1485, *dated 18th November* 1880.

Adverting to this Office Circular No. 1482, dated 29th October 1880, prescribing rules for Imperial Money Order transactions in the taluks of Mysore, published in the *Mysore Gazette* of the 30th idem, the Comptroller has the honor to forward herewith 12 copies of the Circular in Kanarese, one copy should be placarded in each Taluk Treasury in some conspicuous place for public information; also forwards a set of forms as per margin connected with the Imperial Money Order transactions for distribution to taluks.

Imperial Inland Money Order applications.
Amildar's receipt to be given to the remitter of I. M. O.
Foreign Money Order applications.
Receipt to be given to the remitter of F. M. O.

The District Treasury Officer and his Head Accountant should acquaint themselves with the detailed rules of the Postal Department and this Office Circular No. 1463, dated 23rd March 1880, relative to Imperial Money Orders (published respectively in the *Mysore Gazette*, dated 1st November 1879 and 27th March 1880) as also with the subsidiary rules issued by this Office on the subject.

Circular No. 1486, *dated* 22*nd November* 1880.

The following orders of the Government of India are published for the information and guidance of Treasury Officers in Mysore.

Government of India, Department of Finance and Commerce, Accounts and Finance, No. 3555, dated Simla, the 2nd November 1880.

Read the undermentioned papers relating to certain defalcations recently discovered in the Huzur Treasury of the Tinnevelly District :—

Letter to the Government of Madras, No. 682, dated 9th February 1880.
Letter from the Government of Madras, No. 759, dated 5rd July 1880, and its enclosures.

Resolution.—The frauds in this case were effected by the substitution, by some of the Treasury subordinates, of copper coin in bags which, when placed under double lock, were supposed to contain silver. This occurred in consequence not of any defect of system, but of a systematic disregard of the rules. As the Government of Madras has already drawn attention to the irregularities which allowed of the perpetration of these frauds in the first instance, and of their non-detection for a long time afterwards, and has also taken measures for enforcing the personal responsibility of the officers concerned for the loss of public money that has taken place, the President in Council will not pass any further orders on this particular case, except to request that the Government of Madras will, after six months, report how far the defalcation has been made good.

2. It seems necessary, however, again to draw attention to the rules for the test of Treasury Balances. In the present case, not one of the Officers, who, during the time that these frauds were committed, filled the Office of Collector or Treasury Officer of Tinnevelly, ever verified his Cash Balance ; and the explanations given by some of them indicate a misapprehension of the nature of the verification required. This occasions a serious apprehension that the due verification of the Treasury Balances is generally neglected in the Madras Presidency. There is also reason to fear that there is laxity in this important matter in other Provinces.

3. His Honor in Council accordingly desires that the necessity of zealous personal care in this matter, and strict adherence to the prescribed rules, may be impressed upon all Collectors and Treasury Officers. It must be clearly understood that the counting of sealed boxes, or bags, is not a verification of the Cash Balances. An officer verifying and certifying the balance in a Treasury must actually examine the contents of the bags and boxes, and count or weigh such contents.

Ordered, that this Resolution be communicated to all Local Governments and Administrations and to all Accountants General and Deputy Accountants General in independent charge.

Ordered also, that a copy of this Resolution be forwarded to the Comptroller General for information, and for the issue of such subsidiary instructions as he may deem necessary.

SECOND COMMISSION LEVIABLE ON LAPSED IMPERIAL MONEY ORDERS.

To—The Deputy Commissioners, Treasury Department, Circular No. 1487, *dated* 22*nd November* 1880.

Second commission leviable on lapsed Imperial Money Orders when such orders are paid is required by para 10 of the Imperial Money Order Rules to be denoted by postage labels which are to be affixed to the back of Money Order, but as the Mysore Government is entitled to a moiety of the 2nd commission, the Comptroller has the honor to request that all such commission may in future be levied in cash instead of postage labels, and credited in the Imperial Money Order accounts, the fact of recovery being certified with red ink on the back of the lapsed order.

The moiety of the 2nd commission which is payable to the Postal Department will be adjusted in the usual course by this Office.

The Amildars of Taluks are requested to observe these instructions.

H. HUDSON,
Comptroller.

REGISTRATION DEPARTMENT.

REGISTRATION IN MYSORE OF DOCUMENTS RELATING TO PROPERTY PARTLY IN MYSORE AND PARTLY IN BRITISH INDIA.

To—The Registering Officers in Mysore, Circular No. 13 *of* 1880—81, *dated* 4*th November* 1880.

Under orders of the Chief Commissioner of Mysore, dated the 22nd October 1880, the Inspector General of Registration has the honor to instruct Registrars and Sub-Registrars in Mysore that they may continue to register documents relating to immovable property situated partly in Mysore and partly in British Territory ; but when delivering them after registry, the Registering Officer must warn the presenter in writing that he is instructed that the registration so made is valid only as regards the property in Mysore and is not valid as regards that in British India.

The fact of the warning being given should be noted in the register with the Registering Officer's signature.

No copy or memorandum should be issued under Section 65 or 66 of the Registration Act III of 1877.

H. HUDSON,
Inspector General of Registration.

EDUCATIONAL DEPARTMENT.

MIDDLE SCHOOL EXAMINATION.

The 4*th November* 1880.

1. Candidates whose names have been registered for the approaching Middle School Examination to be held at Bangalore, Mysore, Shimoga, and Hassan are informed that the examination will commence on Wednesday, the 1st December, at 10 A M, precisely.

2. Candidates should present themselves at the Central College in Bangalore, the Maha Raja's College in Mysore, the Shimoga College and the Hassan High School respectively, at half past 9 A. M. each day.

The examination will be conducted in the order of time and subjects shewn below :—

Days.	Hours.	Subjects.
Wednesday, 1st December 1880.	10 — 1 ...	Geography and Indian History.
Do do do.	2 — 4 ...	Arithmetic.
Do do do.	4 — 4½ ...	English Handwriting.
Thursday, 2nd December 1880.	10 — 12½ ...	Translation, &c., and English Grammar.
Do do do.	12½ — 1 ...	English Dictation.
Do do do.	2 — 4 ...	Mathematics.
Do do do.	4 — 4½ ...	Handwriting in Second Language.
Friday, 3rd December 1880.	10 — 12½ ...	Second Language. Composition, Grammar, and Text Book.
Do do do.	12½ — 1 ...	Do Dictation.
Do do do.	2 — 4 ...	English History.
Saturday, 4th December 1880.	10 — 12... ...	Physical Geography.
Do do do.	2 — 4... ...	Physiology or Hygiene.
Monday, 6th December 1880.	10 — 12... ...	Political Economy.
Do do do.	2 — 4... ...	Agriculture.

3. Matriculates who have registered their names for examination in handwriting and candidates for the modified General Test, will have to appear on the days specified in the above table for examination in their respective subjects.

The attention of candidates is particularly called to the following rules :—

(1.) No candidate will be allowed to quit the Examination Room on any day until the expiration of half an hour from the time fixed for the commencement of the Examination, and candidates arriving after the expiration of that half hour will not be admitted.

(2.) No candidate will be allowed to re-enter the Examination Room, during the hour of Examination, after once quitting it, nor to leave the room without finally giving up his answer papers.

(3.) Any candidate detected in speaking to, or in any way communicating with, any other candidate, will be at once removed from the room, and the circumstance be reported to the Commissioner.

(4.) *No candidate will on any account be allowed to take into the Examination Room books or papers of any kind.* Any one detected with such in his possession, or having recourse to any unfair practices, will be removed from the room and the occurrence be reported to the Commissioner.

(5.) A candidate having completed his paper will rise from his seat and remain standing until the Superintendent takes his answer papers. Any candidate wishing to ask any question will pursue the same course, but will on no account leave his place.

(6.) Any paper sent up without the candidate's name and number affixed will not be examined.

(7.) Candidates will not be allowed to take any papers, except their question papers, out of the Examination Room.

(8.) Candidates are forbidden to tear up papers or to throw papers on the floor. All "spoilt copies, &c.," should be left on the desk where the candidate has been writing.

(9.) Candidates will be allowed to retain their question papers.

L. RICE,
Director of Public Instruction,
Mysore & Coorg.

BANGALORE MUNICIPALITY.

The 17th November 1880.

Copy of Proceedings of the Town Municipal Commission at a meeting held on Friday the 29th October 1880, at 7½ A. M.

President.

Dr. J. H. Orr, C. B., *Present.*

Ex-Officio Members.

Absent.—The Deputy Commissioner, Bangalore Dist.
The Executive Engineer, Nundydroog Divn.
The Commissary of Ordnance.
The Surgeon to the Mysore Commission.
The Amildar of Bangalore.

Municipal Commissioners.

1st Division, Balé Pettah.

Present.—Mr. A. S. Raghavachar.
Absent.— Mr. B. Murry Gungiah.

2nd Division, Manavarte Pettah.

Present.—Mr. A. Srinivasachar.
Mr. Khazi Abed Jaffar Sahib.

3rd Division, Alsur Pettah.

Present.—Mr. S. V. Annaiyappa Chetti.
Absent.—Mr. P. Changalraya Modaliar.

4th Division, Nagarta Pettah.

Present.—Mr. Doddi Venkatramana Chetti.
Absent.—Mr. B. Narayan Chetti.

5th Division, Kalasi Palyam.

Present.—Mr. C. Muttusami Naidu.
Mr. M. Ramasami Chetti.

I. The usual monthly accounts for September 1880 are laid before the Board, read and duly passed.

Ordered.—That the following cash account be submitted to the Deputy Accountant General in Mysore.

Cash Account Current of the Municipal Commission for the Town of Bangalore for the month of September 1880.

Receipts.	Amount.			Expenditure.	Amount.		
Cash Balance brought forward from last month's account	1,760	2	4	I. Collection. 1. For octroi tax ...	227	0	11
I. Octroi. 2. Animals for slaughter ..	10	8	0	I. Collection. 2. Mohatarfa tax on houses, buildings and lands, and for tax on professions and trades	150	9	0
I. Octroi. 4. Building materials ...	7	8	0	I. Collection. 7. Rents assigned to Municipality ...	20	0	0
I. Octroi. 6. Tobacco, betel-leaf and betel-nuts ...	1,565	5	10	II. Head Office charges ...	408	7	2
I. Octroi. 7. Tax on dry and green cocoanuts ...	303	12	10	III. Public Works. 1. Supervision ...	147	8	0
II. Mohatarfa and Municipal taxes on houses, buildings or lands ...	442	12	6	III. Public Works. 2. *a.* Original works ...	1	8	2
III. Mohatarfa tax on professions and trades...	60	2	0	III. Public Works. *b.* Purchase of land ...	125	0	0
VII. Rents.—2. Nazul shops (Market) ...	355	4	10	III. Public Works. 3. Repairs ...	569	3	3
IX. Extraordinary.— 5. Other Items. (Tobacco license) ..	4	0	0	IV. Police	1,474	12	4
X. Fines	2	12	8	VI. Charitable grants 2. Vaccination ...	20	8	0
XI. Pounds	27	1	10	VII. Conservancy	764	4	11
XII. Miscellaneous	86	4	0	IX. Lighting	182	0	6
XIII. Fees from liquor licenses ...	236	2	8	X. Gardens ...	30	3	8
				XII. Miscellaneous 3. Cattle Pound charges	21	2	6
				XII. Miscellaneous 4. Statistics and mortuary registration ...	32	5	0
				XII. Miscellaneous 5. Other miscellaneous items ...	155	9	11
				XIII. Extraordinary. P. W. Reserve ...	151	8	0
				Total Rupees.....	4,481	11	4
				To Cash Balance carried to next month's accounts.....	380	2	2
Grand Total Rs.....	4,861	13	6	Grand Total Rs.....	4,861	13	6

428

Mortuary Register, Bangalore.

Statement of Births and Deaths within the Town Municipal limits during the month of September 1880.

Causes of Death.	Europeans.		East Indians.		Musalmans.		Hindus.		Native Christians.		Buddhists.		Other Classes.		Total.		Total in—		Difference.	
	M.	F.	M.	F.	M.	F.	M.	F.	M.	F.	M.	F.	M.	F.	M.	F.	Sept. 1880.	August 1880.	Increase.	Decrease.
Cholera ...	...	...	...	...	...	...	...	...	...	...	...	...	...	...	...	...	...	...	...	...
Small-pox ...	...	...	...	...	...	...	...	...	...	...	...	...	...	...	...	...	...	...	...	...
Fevers ...	...	...	...	...	6	4	12	10	...	...	...	...	...	...	18	14	32	37	...	5
Bowel-complaints ...	...	...	...	...	...	1	2	1	...	...	...	...	...	...	2	2	4	6	...	2
Injuries. Suicide ...	...	...	...	...	...	...	...	...	...	...	...	...	...	...	...	...	...	1	...	1
Injuries. Wounding ...	...	...	...	...	...	...	...	...	...	...	...	...	...	...	...	...	...	3	...	3
Injuries. Accident ...	...	...	...	...	...	...	...	...	...	...	...	...	...	...	...	...	...	...	...	...
Injuries. Snake-bite or killed by wild beasts. ...	...	...	...	...	...	...	...	...	...	...	...	...	...	...	...	...	...	...	...	...
Other Causes—																				
Consumption ...	...	...	...	...	...	...	2	3	...	...	...	...	...	...	2	3	5	12	...	7
Convulsion ...	...	...	...	...	...	...	2	2	...	...	...	...	...	...	2	2	4	4	...	...
Dropsy ...	...	...	...	...	...	...	...	...	...	...	...	...	...	...	...	...	...	1	...	1
Lock-jaw ...	...	...	...	...	1	1	...	3	...	...	...	...	...	...	1	4	5	2	3	...
Asthma ...	...	...	...	...	...	...	...	...	...	...	...	...	...	...	...	...	...	6	...	6
Rheumatism ...	...	...	...	...	1	...	5	1	...	...	...	...	...	...	6	1	7	3	4	...
Old-age ...	...	...	...	...	...	...	2	2	...	...	...	...	...	...	2	2	4	8	...	4
Croup ...	...	...	...	...	...	...	2	8	...	...	...	...	...	...	2	8	10	11	...	1
Total Other Causes.....	...	...	...	...	2	1	13	19	...	...	...	...	...	...	15	20	35	47	7	19
Total Deaths.....	...	...	...	...	8	6	27	30	...	...	...	...	...	...	35	36	71	94	7	30
Total Number of Births.....	...	...	...	...	7	9	34	40	1	1	...	...	...	...	42	50	92	112	...	20

Abstract of Mortuary Report and Percentage of Births and Deaths on the estimated Population, 58,573.

Classes.	Births.		Difference.		Percentage of Births.		Deaths.		Difference.		Percentage of Deaths.	
	August 1880.	September 1880.	Increase.	Decrease.	August 1880.	September 1880.	August 1880.	September 1880.	Increase.	Decrease.	August 1880.	September 1880.
Europeans ...	...	...	...	...	...	...	...	...	...	...	...	...
East Indians ...	...	...	...	...	...	...	...	...	...	...	...	...
Musalmáns ...	19	16	...	3	·29	·24	20	14	...	6	·308	·21
Hindus ...	92	74	...	18	·17	·14	72	57	...	15	·14	·11
Native Christians	1	2	1	..	·15	·307	2	...	...	2	·307	...
Buddhists ...	...	...	...	...	...	...	...	...	...	...	...	...
Other Classes ...	...	...	...	...	...	...	...	...	...	...	...	...
Total.....	112	92	1	21	·19	·15	94	71	...	23	·16	·12

REMARKS.

There were 71 deaths during the month 32 from fever, 4 from bowel-complaints, and 35 from other causes as detailed in the previous page.

The number of deaths in September 1880, as compared with those of August 1880, are as follows:—

Of Musalmáns 14 against 20, Hindus 57 against 72, Native Christians none against 2, being 23 less than the previous month and 38 below the total number of deaths registered in the corresponding month of last year.

Age.

Classes.	Number died during the month.	Born dead.	Under 1 year.	2 to 5 years.	6 to 12 do	12 to 20 inclusive.	21 to 30 do	31 to 40 do	41 to 50 do	51 to 60 do	Above 60.	Total.
Europeans ...	...	...	...	...	...	...	...	...	...	...	...	...
East Indians ...	...	...	...	...	...	...	...	...	...	...	...	...
Musalmáns ...	14	1	2	2	2	...	...	3	1	2	1	14
Hindus ...	57	3	14	3	5	4	9	6	3	4	6	57
Native Christians ...	...	...	...	...	...	...	...	...	...	...	...	...
Buddhists ...	...	...	...	...	...	...	...	...	...	...	...	...
Other Classes ...	...	...	...	...	...	...	...	...	...	...	...	...
Total.....	71	4	16	5	7	4	9	9	4	6	7	71

Resolution.—Approved.

II. Proceedings of the Chief Commissioner of Mysore, No. 3548-49—Ml. 187, dated 16th September 1880, sanctioning the estimate amounting to Rs. 1,660, for the construction of a Fish and Poultry Market in the Pettah.

Resolution.—That the final consideration of this project be deferred till the next meeting of the Board, to allow the Municipal Commissioners an opportunity to inspect the locality, and to satisfy themselves as to the advisability of carrying out the proposed work.

III. Application for gratuity from Daffedar Virnayak of the Town Municipality.

Resolved.—That the necessary gratuity roll shewing the services rendered in the taluk as well as in the Municipality be prepared and submitted to the Chief Commissioner for approval and sanction.

IV. Proceedings of the Chief Commissioner of Mysore, No. 4028-9—Ml. 217, dated 11th October 1880, allowing certain items of expenditure to stand in the current year's budget.

Resolution.—To be recorded.

V. List of proposed works for insertion in the Budget of 1881—82.

Resolution.—That the Municipal Executive Engineer be directed to prepare estimates of the works proposed to be entered in the budget for the ensuing year, and that the list be then submitted to a Committee of the Board for consideration and report, the Committee to be composed of the President, and one Municipal Commissioner from each Division as undermentioned, and to assemble at such time and place as the President may determine.

1st Division.

Mr. A. S. Raghavachar.

2nd Division.

Mr. A Srinivasachar.

3rd Division.

Mr. Chengalraya Modaliar.

4th Division.

Mr. Doddi Venkataramana Chetti.

5th Division.

Mr. Muttusami Naidu.

Deferred Proposition.

VI. The consideration of tenders received for the lighting of the Town.

Resolved.—That the contract be renewed to the present contractor for another year on the same terms as has been proposed by the Cantonment Municipal Commissioners.

J. H. ÖER,
President, Town Munl. Commn

NUNDYDROOG DIVISION.

NOTIFICATION.

The 25th November 1880.

Sessions for the Túmkúr District will be held at Túmkúr on Monday the 6th day of December 1880 and following days:—

The case mentioned below is posted for trial:—

Magisterial No.	Sessions No.	Names of Prisoners.	Name of the Committing Magistrate.	Sections charged under—	Date of Committal.
22 of 1880.	21	Bala Hutchvira, Timmaiya...	Mr. Varadarajaiengar, Munsiff and 2nd Class Magistrate, Turuvekere.	302 and 304, I. P. C.	27th September 1880.

The Magistrate above named is hereby directed to cause all parties connected with the above noted case to be in attendance at Túmkúr before the Sessions Court on Monday the 6th day of December 1880, at 11 A. M.

All cases committed prior to that date will be taken up for trial in addition to the above.

IN THE COURT OF THE DISTRICT JUDGE, NUNDYDROOG DIVISION.

Insolvency Cases Nos. 194, 195 *and* 327 *of* 1880.

Whereas a sum of Rs. 24—10—2 has been realized by the sale of articles belonging to the insolvent-debtors as shewn in the appended schedule, the creditors are hereby required to prove their claims on or before the 15th December 1880, and to receive payment of the sums specified opposite their names.

Schedule.

No. of the Case and the Name of the Insolvent.	Names of Creditors.	Amount. Rs.	A.	P.	Remarks.
No. 194 of 1880. Mr. Ashworth.	1. Bangalore Bank (Limited)	4	2	3	
	2. V. Ganghadara Medali	4	2	3	
	3. D'Silva and Co.	0	1	9	
	4. O'Hara and Co.	0	4	1	
	5. Riggs and Co.	0	3	3	
	6. Ganghadhara Chetti and Co.	0	1	5	
	7. Kuppu Chetti and Co.	0	2	9	
	8. Mr. Gaunt	0	1	6	
	9. Mr. W. Marlam	0	0	11	

No. of the Case and the Name of the Insolvent.	Names of Creditors.	Amount. Rs.	A.	P.	Remarks.
No. 194 of 1880. Mr. Ashworth.	10. Savings' Bank (Limited) Túmkúr	0	4	1	
	11. Virabadra Chetti & Co.	0	0	10	
	12. Shanmugam	0	0	7	
	13. Sultan Saib, Túmkúr	0	1	0	
	14. Narayan Chetti and Co.	0	1	11	
	15. Mussuth	0	1	6	
	16. Venkatappa	0	0	4	
	17. Krishnappa	0	0	2	
	18. Abdul Razak, Túmkúr	0	4	2	
	Total....	10	2	9	
No. 195 of 1880. Katappa Naik.	1. Polepalli Subbaiya Shetti	5	6	9	
	2. Gollar Muttamma	4	7	0	
	3. Kantina Krishnappa	1	7	8	
	4. Tavarekere Krishnappa	0	3	8	
	Total....	11	9	1	
No. 327 of 1880. Vizemahomedkhan and Boyzid khan.	1. Bangalore Bank (Limited)	1	14	0	
	2. Rangaiya Shetti	0	2	8	
	3. Sanjivaiya Garu	0	0	6	
	4. Gaus Saib	0	0	11	
	5. Baba Miya	0	12	3	
	Total....	2	14	4	
	Grand Total....	24	10	2	

T. R. A. THUMBOO CHETTY,
District & Sessions Judge.

BANGALORE DISTRICT.

NOTIFICATION.

The 1st November 1880.

Notice is hereby given that sealed tenders will be received up to 1st December 1880, by the Superintendent of the Central Jail, for the supply by contract of all articles of diet, &c., required for the use of the prisoners confined in the Bangalore Central Jail and District Lock-up.

2. No tenders will be received after the date above mentioned.

3. Tenders to be superscribed "Tenders for the supply of provisions for the Central Jail and District Lock-up."

4. No tenders will be received unless accompanied by a deposit of Rs. 500 in cash or currency notes.

5. Tenders will be opened by the Superintendent, Central Jail, at his Office on the date above named, in the presence of such tenderers as may choose to attend.

6. All tenders must specify the rate at which the following articles can be supplied in pound weights per rupee :—

Rice, 1st and 2nd sort	Salt	Coffee
Ragi do	Curry-powder	Tea
Dál do	Onions	Bread
Ballar	Garlic	Milk
Meat	Vegetables	Soap-nut
Tyre	Firewood	Soap
Gingelly-oil	Gram	Marking-nut
Ghee	Soji	Pepper
Tamarind	Sugar	

7. The rates tendered must, besides the articles specified above, include lamp-oil, earthen plates, lotas, brooms, &c. The contractor will supply ragi grain to be ground by convicts, and it will be issued as flour. The supply will be calculated and payment made upon the quantity so issued at the price of ragi grain.

8. The probable requirements of the chief articles for the year will be (for 900 convicts on various scales) as under :—

Ragi	(lbs)	416,667	Gingelly-oil	(lbs)	2,833
Rice	,,	94,167	Salt	,,	12,500
Dál or bállar	,,	62,500	Curry-powder	,,	9,583
Vegetables	,,	125,000	Onions	,,	12,500
Meat	,,	28,333	Firewood	,,	500,000
Ghee	,,	2,833			

9. The Superintendent reserves to himself the right of rejecting any tender without assigning any reason for so doing.

10. The deposit of the successful competitor will be retained, and will be forfeited if he fails to execute the contract bond or to furnish security to the amount of Rs. 1,500 in cash or Government bonds within one week from the date of the acceptance of his contract being made known to him.

11. No advance of cash will be made to the contractor. Payments for the articles supplied will be made by the Superintendent, Central Jail, as soon as possible after the 1st of each month.

12. A store-room will be made over to the contractor in which he can keep all non-perishable articles. Perishable articles, such as meat, &c., must be at the Jail by 8 A. M. daily.

13. The contract must not be sublet.

14. A fine not exceeding Rs. 150 will be levied at the discretion of the Superintendent of the Central Jail for any infringement of the stipulation of the contract, or for the supply of any inferior articles, and, if frequently violated, the contract may be annulled and the security confiscated to Government.

15. The decision of the Superintendent of the Central Jail to be final in all questions of infringement of contract.

16. The contractor will be bound to purchase vegetables from the jail garden for the use of the prisoners at the same rate as in the contract.

17. Any further information can be obtained by applying at the Superintendent's Office.

18. This contract will be subject to the confirmation of the Inspector General of Prisons in Mysore.

J. HENDERSON, M. D.,
Supt., Central Jail.

NOTICE.

200 *Rs. Reward.*

A reward of Rs. 200 is offered to any person, for such information as may lead to the detection and conviction of the person or persons concerned in the theft of Rs. 1,875—10—4 from the cash chest of the Imperial Post Office on the night of the 4th September 1880.

E. HEWETSON,
District Supt. of Police,
Town & Cantt. of Bangalore.

KOLAR DISTRICT.

NOTIFICATION.

The 15th November 1880.

Notice is hereby given that sealed tenders will be received up to 9 A. M. on Wednesday the 15th December 1880, by the Superintendent of the Kolar District Jail at Kolar, for the supply by contract of all articles of diet, &c., required for the use of the prisoners confined in the Kolar District Jail, from 1st January to 31st December 1881, both days inclusive.

2. No tenders will be received after the date and hour above named.

3. Tenders to be superscribed, "Tenders for the supply of provisions for the Kolar District Jail."

4. No tenders will be received unless accompanied by a deposit of Rs. 50—0—0 in cash or currency notes.

5. Tenders will be opened by the Superintendent of the District Jail at Kolar in the Jail Office on the date above named in the presence of such tenderers as may choose to attend.

6. All tenders must specify separately the rate per convict per diem for the following classes, *viz* :—

	Rs.	A.	P.
Native laboring males			
Do short-term do			
Do non-laboring males, and females and under-trial ..			
Do juveniles			
European and East Indians			

7. The rates tendered must, besides the articles specified in the undermentioned diet scale, include hospital diet (as per scale), extra to sick, and perishable articles, lamp-oil, lanterns, and repairing the same, copper and earthen cooking vessels and plates for convict messes, baskets for latrine and dry earth, sigékayi for bathing of the convicts in jail, all repairing and tinning of copper utensils, brooms, pots for drinking purposes, milk, bread, sugar, &c., required for children of female convicts, sulphur for fumigating cells, fuller's earth and all other sundry articles exclusive of clothing required to be supplied regularly for the use of the prisoners.

8. The Superintendent reserves to himself the right of rejecting any tender without assigning any reason for so doing.

9. The deposit of the successful tenderer will be retained, and will be forfeited if he fails to execute the contract bond and to furnish security to the amount of Rs. 500—0—0 in cash or Government bonds within one week from the date of the acceptance of his contract being made known to him.

10. No advance of cash will be made to the contractor. Payment for the articles supplied will be made by the Superintendent of the District Jail, as soon as possible, after the 1st of each month.

11. A store room will be made over to the contractor in which he can keep all non-perishable articles. Perishable articles such as meat, &c., must be at the Jail by 7—15 A. M. daily.

12. The contract must not be sublet.

13. A fine not exceeding Rs. 25—0—0 will be levied at the discretion of the Superintendent of the Jail for any infringement of the stipulations of the contract or for the supply of any inferior articles, and, if frequently violated, the contract may be annulled and the security confiscated to Government.

14. The decision of the Superintendent of the Jail to be final in all questions of infringement of contract.

15. The contractor will be bound to purchase vegetables from the jail garden for the use of the prisoners at a fixed rate of 4 pies per lb.

16. The contract is subject to the confirmation of the Inspector General of Prisons.

17. Any further information can be obtained by applying to the Superintendent of the Kolar District Jail from 7 to 9 A. M. on any day.

Table of Diet for all Classes of Native Prisoners in the Kolar District Jail.

Names of Articles.	B Scale for men sentenced to more than 6 months and up to 2 years' rigorous imprisonment.							Men sentenced to rigorous imprisonment for 6 months and under.							Simple—women, and under-trial.							Juvenile Prisoners.						
	Monday.	Tuesday.	Wednesday.	Thursday.	Friday.	Saturday.	Sunday.	Monday.	Tuesday.	Wednesday.	Thursday.	Friday.	Saturday.	Sunday.	Monday.	Tuesday.	Wednesday.	Thursday.	Friday.	Saturday.	Sunday.	Monday.	Tuesday.	Wednesday.	Thursday.	Friday.	Saturday.	Sunday.
	oz	oz	oz	oz	oz	oz	oz	oz	oz	oz	oz	oz	oz	oz	oz	oz	oz	oz	oz	oz	oz	oz	oz	oz	oz	oz	oz	oz
Rice ...	...	12	...	12	...	12	..	...	12	...	...	...	12	...	...	...	..	...	...	...	20	...	10	...	...	...	10	..
Ragi ...	24	12	24	12	24	12	24	24	12	24	24	24	12	24	20	20	20	20	20	20	...	20	10	20	20	20	10	20
Dál or ballar ...	4	2	4	2	4	2	4	3	2	3	3	3	3	3	2	2	2	2	2	2	2	2	2	2	2	2	2	2
Meat (with bone.)	...	8	...	3	...	3	...	...	4	...	...	...	...	...	..	...	...	...	...	...	...	...	3	...	...	...	3	...
Tyre ...	...	8	...	8	...	8	...	..	...	...	...	...	...	...	...	8	...	...	...	8	...	...	5	...	...	...	5	...
Gingelly-oil ...	...	$\frac{1}{4}$	...	$\frac{1}{4}$	...	$\frac{1}{4}$	$\frac{3}{8}$	$\frac{1}{8}$	$\frac{1}{8}$	$\frac{1}{8}$	$\frac{1}{8}$	$\frac{1}{8}$	$\frac{1}{8}$	$\frac{1}{8}$	$\frac{1}{8}$	$\frac{1}{8}$	$\frac{1}{8}$	$\frac{1}{8}$	$\frac{1}{8}$	$\frac{1}{8}$	$\frac{1}{8}$	...	$\frac{1}{16}$	$\frac{1}{16}$	$\frac{1}{16}$	...	$\frac{1}{16}$	$\frac{1}{16}$
Ghee ...	$\frac{3}{8}$	...	$\frac{3}{8}$	...	$\frac{3}{8}$	...	...	...	...	...	...	...	...	...	...	...	...	...	...	...	...	$\frac{1}{8}$	...	...	...	$\frac{1}{8}$	...	...
Tamarind ...	$\frac{1}{2}$	$\frac{1}{2}$	$\frac{1}{2}$	$\frac{1}{2}$	$\frac{1}{2}$	$\frac{1}{2}$	$\frac{1}{2}$	$\frac{1}{2}$	$\frac{1}{2}$	$\frac{1}{2}$	$\frac{1}{2}$	$\frac{1}{2}$	$\frac{1}{2}$	$\frac{1}{2}$	$\frac{1}{2}$	$\frac{1}{2}$	$\frac{1}{2}$	$\frac{1}{2}$	$\frac{1}{2}$	$\frac{1}{2}$	$\frac{1}{2}$	$\frac{3}{8}$	$\frac{3}{8}$	$\frac{3}{8}$	$\frac{3}{8}$	$\frac{3}{8}$	$\frac{3}{8}$	$\frac{3}{8}$
Salt ...	$\frac{3}{4}$	$\frac{3}{4}$	$\frac{3}{4}$	$\frac{3}{4}$	$\frac{3}{4}$	$\frac{3}{4}$	$\frac{3}{4}$	$\frac{5}{8}$	$\frac{5}{8}$	$\frac{5}{8}$	$\frac{5}{8}$	$\frac{5}{8}$	$\frac{5}{8}$	$\frac{5}{8}$	$\frac{5}{8}$	$\frac{5}{8}$	$\frac{5}{8}$	$\frac{5}{8}$	$\frac{5}{8}$	$\frac{5}{8}$	$\frac{5}{8}$	$\frac{1}{2}$	$\frac{1}{2}$	$\frac{1}{2}$	$\frac{1}{2}$	$\frac{1}{2}$	$\frac{1}{2}$	$\frac{1}{2}$
Curry powder ...	$\frac{3}{8}$	$\frac{3}{8}$	$\frac{3}{8}$	$\frac{3}{8}$	$\frac{3}{8}$	$\frac{3}{8}$	$\frac{3}{8}$	$\frac{5}{16}$	$\frac{5}{16}$	$\frac{5}{16}$	$\frac{5}{16}$	$\frac{5}{16}$	$\frac{5}{16}$	$\frac{5}{16}$	$\frac{5}{16}$	$\frac{5}{16}$	$\frac{5}{16}$	$\frac{5}{16}$	$\frac{5}{16}$	$\frac{5}{16}$	$\frac{5}{16}$	$\frac{5}{16}$	$\frac{5}{16}$	$\frac{5}{16}$	$\frac{5}{16}$	$\frac{5}{16}$	$\frac{5}{16}$	$\frac{5}{16}$
Onions ...	$\frac{1}{2}$	$\frac{1}{2}$	$\frac{1}{2}$	$\frac{1}{2}$	$\frac{1}{2}$	$\frac{1}{2}$	$\frac{1}{2}$	$\frac{1}{2}$	$\frac{1}{2}$	$\frac{1}{2}$	$\frac{1}{2}$	$\frac{1}{2}$	$\frac{1}{2}$	$\frac{1}{2}$	$\frac{1}{2}$	$\frac{1}{2}$	$\frac{1}{2}$	$\frac{1}{2}$	$\frac{1}{2}$	$\frac{1}{2}$	$\frac{1}{2}$	$\frac{1}{2}$	$\frac{1}{2}$	$\frac{1}{2}$	$\frac{1}{2}$	$\frac{1}{2}$	$\frac{1}{2}$	$\frac{1}{2}$
Garlic ...	$\frac{1}{16}$	$\frac{1}{16}$	$\frac{1}{16}$	$\frac{1}{16}$	$\frac{1}{16}$	$\frac{1}{16}$	$\frac{1}{16}$	$\frac{1}{32}$	$\frac{1}{32}$	$\frac{1}{32}$	$\frac{1}{32}$	$\frac{1}{32}$	$\frac{1}{32}$	$\frac{1}{32}$	$\frac{1}{32}$	$\frac{1}{32}$	$\frac{1}{32}$	$\frac{1}{32}$	$\frac{1}{32}$	$\frac{1}{32}$	$\frac{1}{32}$	$\frac{1}{64}$	$\frac{1}{64}$	$\frac{1}{64}$	$\frac{1}{64}$	$\frac{1}{64}$	$\frac{1}{64}$	$\frac{1}{64}$
Vegetables ...	6	6	6	6	6	6	6	6	6	6	6	6	6	6	6	6	6	6	6	6	6	5	5	5	5	5	5	5
Firewood* ...	$1\frac{1}{2}$ or 2 lbs daily.							$1\frac{1}{2}$ or 2 lbs daily.							$1\frac{1}{2}$ or 2 lbs daily.							$1\frac{1}{2}$ or 2 lbs daily.						

* Where closed fire-places are in use, $1\frac{1}{2}$ lbs. of firewood will be served out; where open fire-places 2 lbs.

Men who do not eat meat to get 4 ozs. of dál and 8 drams of ghee on meat days. 2 drams of salt to be issued and eaten when sprinkled over the food.

Men who do not eat meat to get 3 ozs. of dál and 8 drams of ghee on meat days.

Women and juveniles to get tyre if sentenced over 6 months; under-trial prisoners, tyre and meat if over 2 months in confinement.

Rice may be given entirely to any under-trial prisoner, unaccustomed to ragi and to any one whom ragi disagrees with, at the recommendation of Medical Officer; juveniles under 14 years to get 16 ozs. of grain and 2 ozs. of meat.

Scale of Diet—Hospital.

Articles of Diet.	Monday.		Tuesday.		Wednesday.		Thursday.		Friday.		Saturday.		Sunday.	
	oz.	dr.	oz.	dr.	oz.	dr.	oz.	dr.	oz.	dr.	oz.	dr.	oz.	dr.
Rice	20	...	20	...	20	...	20	...	20	...	20	...	20	...
Ragi	...	...	...	...	...	...	...	...	...	...	...	...	...	...
Dal or ballar	3	...	2	...	3	...	2	...	3	...	2	...	3	...
Meat (with bones)	...	...	3	...	..	...	3	...	...	...	3	...	...	...
Tyre	...	...	8	...	...	..	8	...	...	...	8	...	...	...
Gingelly oil	...	...	...	4	...	...	...	4	...	...	...	4	...	4
Ghee	...	4	..	...	...	4	...	...	...	4	...	...	...	...
Tamarind	...	8	...	8	...	8	...	8	...	8	...	8	...	8
Salt	...	10	...	10	...	10	...	10	...	10	...	10	...	10
Curry powder	...	6	...	6	...	6	...	6	...	6	...	6	...	6
Onions	...	8	...	8	...	8	...	8	...	8	...	8	...	8
Garlic	...	1	...	1	...	1	...	1	...	1	...	1	...	1
Vegetables	4	...	4	...	4	...	4	...	4	...	4	...	4	...
Firewood	1½ or two lbs. daily.													

Men who do not eat meat to get 3 ozs. of dál, 8 ozs. of tyre and 4 dr. of ghee on meat days.

Articles comprising the different head of diets per day for sick in Jail Hospital in cases where they are absolutely required.

Spoon.		Milk.		Low.		Full.	
Ságu ...	4 oz.	Bread ...	12 oz.	Mutton in broth ...	6 oz.	Mutton for curry ...	8 oz.
Sugar ...	2 „	Rice ...	12 „	Bread ...	12 „	Rice ...	8 „
Milk ...	6 „	Milk ...	2 pts.	Butter or ghee ...	1 „	Curry powder ...	½ „
Rice ...	2 „	Sugar ..	2 oz.	Onions ...	1 „	Country vegetables ...	4 „
Salt ...	2 dr.	Rice for cunjee	2 „	Flour ...	½	Hoppers	6 No.
		Salt ...	2 dr.	Salt ...	1 „	Butter or ghee ...	1 oz
						Salt ...	1 „

A. RANGASAMAIENGAR,
Supt., District Jail.

TUMKUR DISTRICT.

The 8th November 1880.

NOTICE UNDER SECTION 354 OF THE CODE OF CIVIL PROCEDURE.

It is hereby declared that the undermentioned person is an insolvent and as such entitled to the benefit of the provisions of Chapter XX of the Code of Civil Procedure, and it is ordered that the said insolvent be and is hereby discharged from custody and from all liability to be arrested or imprisoned in respect of any of the debts mentioned in the schedule filed with records of the case concerned.

Kumbar Siddappa .. In Insolvent Case No. 12 of 1880.

The 24th November 1880.

NOTICE UNDER SECTION 354 OF THE CODE OF CIVIL PROCEDURE.

It is hereby declared that the undermentioned persons are insolvents and as such entitled to the benefit of the provisions of Chapter XX of the Code of Civil Procedure, and it is ordered that the said insolvents be and are hereby discharged from custody and from all liability to be arrested or imprisoned in respect of any of the debts mentioned in the schedule filed with records of the case concerned.

Gurusantappa. In Insolvent Case No. 14 of 1880.
Balé Parappa. Do No. 15 do

E. CHITAMBRAM IYER, *Subordinate Judge.*

COORG.

NOTIFICATIONS.

The 11th November 1880.

Notice is hereby given for general information that the arrears due on the undermentioned coffee estates in Coorg being still unpaid, they will be put up to public auction at the 2nd Assistant Superintendent's Office at Mercara, at noon on Monday the 20th December 1880, and sold to the highest bidder above the upset price.

Survey No.	Title-deed No.	Name of Defaulter.	Name of Estate.	Village, Nad and Taluk.	Area.	Boundaries. North.	South.	East.	West.	Assessment for 1879-80.			Costs and Charges.			Total.		
109	114	Mr. W. V. Drummond.	Lilford ...	Hakatur Village in Kaggodlunad of the Mercara Taluk.	113·93	Iyappa Davu ...	Government báne ...	B. Bopu's... ...	Government báne ...	227	13	8	4	4	6	232	2	2
729	131	Mrs. Annie Margaret Fowler.	Glen Moriston	Heggal in Yedenalknad of the Yedenalknad Taluk	282·81	Fowler estate 2rd part Government bane.	Fowler's jungle Bradford ...	Fowler's jungle and Rose's jungle.	Fowler's jungle ...	565	9	11	4	4	6	569	14	5

N. B.—The purchaser will be subject to pay the assessment for the current year, *viz.*, 1880—81.

Conditions of Sale.—Para.—1. The highest bidder will be the purchaser subject to confirmation of sale, provided he deposit 25 per cent of the purchase money immediately; should he fail to make such deposit the lot will be put up again.

2. The balance of the purchase money must be paid before noon of the 30th day from the date of sale, but if that day happens to be a Sunday or holiday the payment must be made before noon on the next office day.

3. Should the purchaser fail to pay the balance of the purchase money within the time fixed, the sale will be cancelled, the deposit will be forfeited and the land may be again put up to auction. The defaulting purchaser will be liable for any deficiency in the amount realized by the re-sale, and in the calculation of such deficiency the deposit that has been forfeited shall not be reckoned. The defaulting purchaser at the first sale shall moreover have no claim to any surplus that may be realized by the re-sale.

4. Any amount due from a defaulting purchaser may be recovered under the rules or practice in force for the recovery of arrears of land revenue.

5. All sales and re-sales shall be subject to confirmation by the Superintendent of Coorg, who may order any sale or re-sale to be cancelled. The decision of the Superintendent is open to revision by the Chief Commissioner and may be modified or reversed by him. If within three months from the date of sale, the Superintendent shall not have reversed the sale or re-sale, the same shall be held to have been confirmed by him.

6. In any case in which a sale or re-sale may be cancelled, the purchaser will receive back the money or deposit paid by him, but will have no claims to interest or damages.

The 11th

Notice is hereby given for general information that the Government dues on the undermentioned Superintendent's Office at Mercara at noon on Monday the 20th December 1880,

No.	Title-deed No.	Name of Defaulter.	Name of Estate.	Village, Nad and Taluk.	Area.	For 1876—77. Assessment.	Difference of Assessment.	Survey Charges.	Total.
			Kiggatnad Taluk.						
2484	...	Kerianidira Subbaiya.	Malakekadu ...	Poradu in Anjigerinad.	9·55	...	...	...	...
115	107	Bittiyanda Aiyappa.	Narakadumalé ...	Rudraguppe in Bettiyatnad.	157·21	...	...	...	...
2319	...	Kuppanda Subbaiya...	Najakolli ...	Do do	42·24	...	...	...	...
124	112	Do Chinnappa...	Kattekadu ...	Do do	48·53 Grass. 6·16 42·37	...	...	...	...
793	316	Koluvandra Iyappa ...	Bembukadu ...	Nokya do ...	158·07	...	...	...	...
2275	...	Kanjitanda Kariyappa.	Angarekadu ...	Badaga do ...	9·53 Grass. 1·6 8·47	...	...	...	...
2279	...	Do do ...	Todiyamottepaisari.	Do do ...	0·14	...	...	...	...
4352	...	Bettakurabara Gottugara Kala.	Gorikadu or Kallumottepaisari.	Nemmale in Tavalgerimurnad.	8·81	...	...	...	...
			Nanjarajapatna Taluk.						
1174	361	Iymudiyana Medappa.	Batta kadu ...	Nidavattu in Gadinad.	15·29	...	...	...	...
			Yelsavirshime Taluk.						
522	...	Goldsmith Yellamma.	Kanremaradakadu ...	Masgada in Bilhada Hobli.	27·48	...	...	...	...
			Padinalknad Taluk.						
3347	...	Babbira Medappa ...	Balangadu ...	Kolagadallu in Bengunad.	2·51	...	...	...	...
4210	...	Sthanika Isvaraiya ...	Balangolli ...	Tannimani in Tavunad.	15·62	...	...	...	...
3220	...	Konkani Dassappa ...	Kodambarikekadu ...	Tavuru do	1·30	...	...	...	...
2894	...	G. Poreyana Kariyanna.	Molayatti Parambu...	Kaliyatturu in Kuyangerinad.	11·01	...	...	...	...
103	...	Br. Bijapura Rambayi.	Balliyakollitundu ...	Bettatter in Kuyangerinad.	253·38	...	...	...	...

November 1880.

Coffee Estates in Coorg being still unpaid, they will be put up to public auction at the 2nd Assistant and sold to the highest bidders above the upset price of the outstandings.

For 1877—78.				For 1878—79.				For 1879—80.			
Assessment.	Difference of Assessment.	Survey Charges.	Total.	Assessment.	Difference of Assessment.	Survey Charges.	Total.	Assessment.	Difference of Assessment.	Survey Charges.	Total.
...	...	...	...	19 1 7	...	...	19 1 7	19 1 7	...	...	19 1 7
...	...	...	...	314 6 9	...	...	314 6 9	...	...	...	...
...	...	...	...	84 7 8	...	...	84 7 8	84 7 8	...	...	84 7 8
...	...	...	...	84 11 10	...	...	84 11 10	84 11 10	...	...	84 11 10
...	...	...	...	316 2 2	...	...	316 2 2	316 2 2	...	...	316 2 2
...	...	...	...	16 15 0	...	...	16 15 0	...	...	...	...
...	...	...	...	0 14 1	...	...	0 14 1	...	...	...	...
...	...	...	...	...	19 6 6	...	19 6 6	...	...	...	...
13 9 4	...	...	13 9 4	30 9 4	...	...	30 9 4	30 9 4	...	...	30 9 4
23 15 4	...	...	23 13 4	54 15 4	...	...	54 15 4	54 15 4	...	...	54 15 4
...	...	...	...	5 0 4	16 1 4	...	21 1 8	...	...	...	...
...	...	...	...	...	...	...	...	31 3 10	...	...	31 3 10
...	...	...	...	2 9 7	...	...	2 9 7	...	...	...	...
...	...	...	...	...	...	...	...	22 0 4	...	...	22 0 4
...	...	...	...	...	...	...	...	512 12 2	...	...	512 12 2

No.	Title-deed No.	Name of Defaulter.	Name of Estate.	Village, Nad and Taluk.	Area.	Total. Assessment.	Total. Difference of Assessment.	Total. Survey Charges.	Total. Total.	Process Charges.	Grand Total.
				Kiggatnad Taluk.							
2484	...	Karianidira Subbaiya.	Malakekadu ...	Poradu in Anjigerinad.	9·55	38 3 2	...	...	38 3 2	4 4 6	42 7 8
115	107	Bittiyanda Aiyappa.	Narakadumalé ...	Rudraguppe in Battiyatnad.	157·21	314 6 9	...	...	314 6 9	4 4 6	318 11 3
2819	...	Kuppanda Subbaiya...	Najakolli ...	Do do	42·24	168 15 4	...	...	168 15 4	4 4 6	173 3 10
124	112	Do Chinnappa ...	Kattekadu ...	Do do	48·53 Grass. 6·16 42·37	169 7 8	...	...	169 7 8	4 4 6	173 12 2
798	316	Koluvandra Iyappa ...	Bembukadu ...	Nokya do	158·07	632 4 4	...	...	632 4 4	4 4 6	636 8 10
2275	...	Kanjitanda Kariyappa.	Angarekadu ...	Badaga do	9·53 Grass 1·6 8·47	16 15 0	...	...	16 15 0	4 4 6	21 3 6
2279	...	Do do ...	Todiyamotte paisari.	Do do	10·47	0 14 1	...	...	0 14 1	4 4 6	5 2 7
4352	...	Bettakurubara Gottugara Kala.	Gorikadu or Kallumotte paisari.	Nemmale in Tavalgerimurnad.	8·81	19 6 6	...	...	19 6 6	4 4 6	23 11 0
				Nanjarajapatna Taluk.							
1174	361	Iymudiyana Medappa.	Betta kadu ...	Nidavattu in Gadinad.	15·29	74 12 0	...	...	74 12 0	4 4 6	79 0 6
				Yelsavirshime Taluk.							
522	...	Goldsmith Yammale.	Kanremarada kadu ...	Masgada in Bilahada Hobli.	27·48	133 12 0	...	...	133 12 0	4 4 6	138 0 6
				Padinalknad Taluk.							
3347	...	Babbira Medappa ...	Balangadu ...	Kolagadallu in Bengunad.	2·51	5 0 4	16 1 4	...	21 1 8	4 4 6	25 6 2
4210	...	Sthanika Isvaraiya ...	Balangolli ...	Tannimani in Tavunad.	15·62	31 3 10	...	...	31 3 10	4 4 6	35 8 4
3220	...	Kankani Dasappa ...	Kodambarike kadu ...	Tevuru do ...	1·30	2 9 7	...	...	2 9 7	4 4 6	6 14 1
2894	...	G. Poreyana Kariyanna.	Molayatti parambu ...	Kadiyatturu in Kuyangerinad.	11·01	22 0 4	...	...	22 0 4	4 4 6	26 4 0
103	...	Br. Bijapura Rambayi.	Balliyakollitundu ...	Bettatturu in Kuyangerinad.	256·38	512 12 2	...	...	512 12 2	4 4 6	517 0 8

439

Boundaries.			
North.	South.	East.	West.
Paisari land.	Paisari land and Cheriya Medri Iyappa's jamma land.	Paisari land.	No. 2485 Mallengala Ponnappa and Muddaiya's Malakekadu.
Mr. Rose's and Government jungle.	Ryots' jungle.	Ryots' bané.	Mr. Savaghe and Kariyamalle.
Sarkar paisari Nagakolli.	Sarkar paisari Nagakolli and Mr. Drummond's Nagakolli estate.	Mr. Drummonds Najakolli estate.	Sarkar paisari Nagakolli.
Grass bané and Ryots' bané.	B. Kariyappas.	Government jungle and Ryots' bané.	Clifton and grass bané.
Paisari jungle, Camping ground for troops, paisari land and grass land.	Paisari jungle.	Paisari jungle.	Paisari jungle.
No. 2280 Kongandra Biddaiya's Devarapalli estate.	Paisari Siripalimotte grass land and paisari kolli jungle.	Kangitandra Kariyappa's Tumbemadu jamma Kokaribelu warga and Aiyappadevara jungle.	Paisari Siripalimotte grass land and Sarkar perambu grass land.
Kangitandra Kariyappa's jahagir, Baliyatevawargada Peggu bané.	No. 2277 Malavandra Ganapati's Todiyamotte paisari coffee estate and Kangitandra Kariyappa's jahagir baliyatevawargada Peggu bané	Kangitandra Kariyappa's jahagir baliyateva wargada Peggu bané.	No. 2277 Malavandra Ganapati's Todiyamotte paisari coffee estate and No. 2278 Malavandra Atchaiya's Todiyamotte paisari coffee estate.
Paisari forest.	Paisari forest.	Paisari forest.	Paisari forest.
Paisari.	Paisari.	Paisari.	KariraKuttaiya's jamma bané.
Sarkar paisari land.	Sarkar paisari land.	Sarkar paisari land.	Goldsmith Viranna and Sarkar paisari land.
Sarkar paisari grass land.	Kumbara Somusmotte bané kadu coffee and Devangada Aliya's bané kadu, Sarkar paisari grass land.	Bidandi Devaiya's mottebané kadu.	Sarkar paisari grass land.
Paisari Palakadu jungle.	Kodi Krishnaiya's Balangolli estate.	Palakadu paisari motte bané, Br. Rudraiya's gundikadu and Bellipadi Monna's jamma Pitlubali wargada Dodda bane.	Jevulebenda motte paisari bané and Paladaka Subbu's jamma, Bellipalina Kandakadu wargada Balangolli bané.
A. Kunna's Nadumateva wargada Kulukanti jamma bané.	Government paisari Kadambarike grass bané and K. Subbaiya's brother Krishnaiya's Kodambarike wargada sagu paddy field.	K. Subbaiya's brother Krishnaiya's Kodambarike wargada sagu paddy field.	A. Kunna's Nadumateva wargada Kulukanti jamma bané and Government paisari Kodambarike grass bané.
Kenganda Senkra's Aditeva wargada Aramanedalada Molayatti parambu, 2nd bit jamma and Tore Akkamma's Pudiyatevada warga jamma Boyandane bané and Koppada Bellu's Malliteva wargada jamma mokki bané.	Maleyara Belli's Molayetti parambu, Billavara Kariya's Molayetti parambu, Madivala Karimbu's Molayetti parambu and paisari kadu.	No. 2893 Pudiya Ammakka's Molayetti parambu paisari Chaliyanda Bellu's Molayetti parambu and paisari kadu.	Kenganda Senkra's Aditeva wargada Aramanedalada Molayetti parambu 2nd bit jamma.
Mr. Mann's jungle.	Grass hill.	Mr. D. Stewart's estate.	Mr. Stewart's jungle.

No.	Title-deed No.	Name of Defaulter.	Name of Estate.	Village, Nad and Taluk.	Area.	For 1876—77. Assessment.			Difference of Assessment.			Survey Charges.			Total.		
				Padinalknad Taluk.													
4086	...	Chauri Ponnappa ...	Pallibakkadatundu ...	Bettatur in Kuyangerinad.	186·80 Devara kadu 39·93	...	...	...	...	...	...	...	...	...	...	...	...
					146·87												
3231	...	Washerman Subba ...	Joyiparekadu ...	Bettageri do ...	3·93	...	...	...	...	...	...	...	...	...	...	...	...
				Mercara Taluk.													
1299	...	Nachabhat Janardanabhat	Kadubané ...	Kaggodlu in Kaggodlunad.	16·21	...	...	...	...	...	...	...	...	...	...	...	...
1301	...	Subramannya Jois ...	Koradakadu ...	Do do ...	15·40	...	...	...	..	...	...	...	...	...	...	...	...
2020	...	B. Mandappa ...	Bakkadabané ...	Biligeri do ...	51·71	103	6	10	...	...	...	...	...	...	103	6	10
488	...	Br. Subrao ...	Anekundadapaisari ...	Kaggodlu do ...	27·86	...	...	...	473	11	2	5	4	0	478	15	2
2260	...	Br. Subrao ...	Kayamkadu ...	Mekeri do ...	19·09	...	...	...	...	...	...	...	...	...	...	...	...
1685	365	Biddandra Boppanna.	Tombatamané ...	Hakatturu in do ...	82·53 Grass 3·83	...	...	...	234	3	0	...	...	...	234	3	0
					78·70												
1592	...	Mus. Jamal ...	Hosabanémottekadu.	Máde in do ...	1·42	...	...	...	...	...	...	...	...	...	...	...	...
80	...	Br. Krishnamachari.	Suttumotte ...	Mekeri in do ...	5·97	11	15	0	...	...	...	...	...	..	11	15	0
1833	...	Kuttatti Changappa.	Kungandri kadu ...	Kotageri in do ...	7·72	15	8	0	...	...	...	...	...	...	15	8	0
1410	...	G. Dasi... ...	Talemarada Athanikadu.	Do do ...	1·41	...	...	...	...	...	...	...	...	...	...	...	...

For 1877—78.				For 1878—79.				For 1879—80.			
Assessment.	Difference of Assessment.	Survey Charges.	Total.	Assessment.	Difference of Assessment.	Survey Charges.	Total.	Assessment.	Difference of Assessment.	Survey Charges.	Total.
...	...	...	...	...	...	...	...	249 2 7	...		249 2 7
...	...	...	...	...	...	...	...	7 2 4	...	...	7 2 4
32 7 5	...	...	32 7 5	32 7 5	...	...	32 7 5	32 7 5	...	...	32 7 5
...	...	...	...	18 12 10	...	...	18 12 10	30 12 10	...	...	30 12 10
103 6 10	...	...	103 6 10	103 6 10	...	...	103 6 10	103 6 10	...	...	103 6 10
...	...	...	...	55 11 8	...	...	55 11 8	55 11 8	...	...	55 11 8
38 2 11	217 1 6	3 9 0	258 13 5	38 2 11	...	...	38 2 11	38 2 11	...	...	8 2 11
...	...	...	...	...	...	...	...	157 6 5	...	...	157 6 5
...	...	...	...	2 13 4	...	...	2 13 4	2 13 4	...	...	2 13 4
...	...	...	...	11 15 0	...	...	11 15 0	11 15 0	...	...	11 15 0
...	...	...	...	15 8 0	...	...	15 8 0	15 8 0	...	...	15 8 0
...	...	...	...	2 13 0	...	...	2 13 0	2 13 0	...	...	2 13 1

No.	Title-deed No.	Name of Defaulter.	Name of Estate.	Village, Nad and Taluk.	Area.	Total. Assessment.	Total. Difference of Assessment.	Total. Survey Charges.	Total. Total.	Process Charges.	Grand Total.
			Padinalknad	*Taluk.*							
4086	...	Chauri Ponnappa ...	Pallibakkadatundu ...	Bettatur in Kuyan-gerinad.	186·80 Devara kadu. 39·93 146·87	249 2 7	...	...	249 2 7	4 4 6	253 7 1
3231	...	Washerman Subba ...	Joyiparekadu ...	Bettageri do	3·98	7 2 4	...	...	7 2 4	4 4 6	11 6 10
			Mercara	*Taluk.*							
1299	...	Nachabhat, Janardanabhat.	Kadubané ...	Kaggodlu in Kaggodlunad.	16·21	97 6 3	...	...	97 6 3	4 4 6	101 10 9
1301	...	Subramanyajois ...	Koradakadu ...	Do do	15·40	49 9 8	...	...	49 9 8	4 4 6	53 14 2
2020	...	B. Mandappa ...	Bakkadabané ...	Biligeri do	51·71	413 11 4	...	...	413 11 4	4 4 6	417 15 10
488	...	Br. Subrao ...	Anekundadapaisari ...	Kaggodlu do	27·86	111 7 4	473 11 2	5 4 0	590 6 6	4 4 6	594 11 0
2260	...	Br. Subrao ...	Kayamkadu ...	Mekeri do	19·09	114 8 9	217 1 6	3 9 0	335 3 3	4 4 6	339 7 9
1685	365	Biddandra Boppanna.	Tombattamané ...	Hakatturu in do	82·53 Grass 3·83 78·70	157 6 5	234 3 0	...	391 9 5	4 4 6	395 13 11
1592	...	Mus. Jamal ...	Horabanemottekadu.	Máde in do	1·42	5 10 8	...	...	5 10 8	4 4 6	9 15 2
80	...	Br. Krishnamachari.	Suttumotte ...	Mekeri in do	5·97	35 13 0	...	...	35 13 0	4 4 6	40 1 6
1833	...	Kuttatti Changappa.	Kungandrikadu ...	Kotageri in do	7·72	46 8 0	...	...	46 8 0	4 4 6	50 12 6
1410	...	G. Dasi... ...	Talemarada Athanikadu.	Do do	1·41	5 10 0	...	...	5 10 0	4 4 6	9 4 6

N. B.—The purchaser will be subject to pay the assessment for the current year viz., 1880—81, as well as

Conditions of Sale.—Para.—1. The highest bidder will be the purchaser subject to confirmation of sale, provided he deposit 25 per cent

2. The balance of the purchase money must be paid before noon of the 30th day from the date of sale, but

3. Should the purchaser fail to pay the balance of the purchase money within the time fixed, the sale will in the amount realized by the re-sale, and in the calculation of such deficiency the deposit that has by the re-sale.

4. Any amount due from a defaulting purchaser may be recoverd under the rules or practice in force

5. All sales and re-sales shall be subject to confirmation by the Superintendent of Coorg, who may order any by him. If within three months from the date of sale, the Superintendent shall not have reversed

6. In any case in which a sale or re-sale may be cancelled, the purchaser will receive back the money or

Boundaries.			
North.	South.	East.	West.
Somaga Saiya's Palli Bakkada tundu Yelada estate and Somaga Saiya's Palli Bakkada tundu Ilachi estate Sarkar paisari kadu.	Sarkar paisari kadu.	Mangandri Belliyappa's Chembadakolli tundu Yelada estate and Padamari Devara kadu and Mangandri Belliyappa's Chambada kolli tundu Yelada estate.	Padamari Devaratandimotte kadu and Captain Taylor and Company's Bunter coffee estate.
Kadle Medu's gundi teva warga paddy field Kadle Medu's Joyipare kadu paisari coffee.	Patel Ranganna's Balamanda warga jamma jungle.	Rachavalada Venkata's Joyipare kadu and Bantra Jattanna's Joyipare kadu.	Genge Subba's jamma Irana warga bané and Niyane Timmaiya's Tingala warga jamma jungle.
Horurnurokalnad Kodagadala village Sarkar kadu bané.	Kagodlunad, Kagodlu village, Sarkar kadubané.	Horurnurokalnad Kodagadalu village, Sarkar kadubané.	Kagodlunad, Kagodlu village, Sarkar kadu bani.
Honna Kote Kunnappa's jammada Muttira wargada kadu bané and Brahman Govindaiya's Sagina Irumanda wargada Irumandane.	Teluru Ukkanna's jammada Kungirana wargada kadu bané boundary of Hakaturu village and Aramane kadang.	Br. Kukke Lingaiya's Sagina Boradira wargada Govinda bané and boundary of Hakaturu village and Aramane kadang.	Mandri Puttappa's jammada Podiva wargada kadu bané and Teluru Uklanna's jammada Kungirana wargada kadu bané.
Masaligauda's Nayikuppa jammada grass land Korgi Akateva warga and Telugara Narnappa's sagina kadu bané grass land Chettirandabaliyateva warga.	Manichagauda's Karani bané jammada grass land Bettanda Baliyatevawarga and Iyappa Devara kadu.	Telugara Narnappa's sagina kadu bané grass land Chattiranda baliyatevawarga jungle Kokale baliya and Brahman Subbaiya's Totirane sagina teva warga.	Brahman Saraswati Krishnaiya's Muri bané sagina grass land Bettanda warga and Masaligauda's Nayikuppa jammada grass land Korji Akateva warga.
Sarkar paisari.	Sankrabhatta and Govindabhatta.	Kuruvanu Muttanna and Sarkar paisari.	Ramabhatta, Nacha bhatta and Janardana bhatta.
Kuttatti Iyappanna's Kullukulu estate and Major Martin's Kullu kulu estate and paisari kayam kadu motte grass hill.	Minachya's sagu Tirumudi wargada tota bané and Brahman Subramanya's kayam kadu estate.	Paisari kayam kadu motte grass hill and Brahman Subramannaiya's kayam kadu estate.	Kayam kadu paisari bané.
Bette Iyappa's Devara bané and Kenjeri kadu paisari.	Government paisari Tombattamane kadu.	Ammattanna Pounappa's Kengeri kadu coffee estate and Government paisari Tombattamane kadu.	Mr. Drummond's Thombattamane coffee estate.
No. 1437 Krishnappa's Hosabané motte paisari coffee estate.	V. Muniyappa's Hosabané motte paisari mané hitlu and No. 1383 V. Muniyappa's Hosabané motte paisari coffee estate.	Road.	No. 1383 V. Muniyappa's Hosabané motte paisari coffee estate and No. 1585 Mus. Jaher Khan's Hosabané motte paisari coffee estate.
Syed Jamal's.	Road.	Jaffer Sait's.	Mahomed Husen's.
Maktum Saib.	Maktum Saib and Channabasappa's jamma jungle.	Maktum Saib.	Channabasappa's jamma jungle and Udiyandra Mandanna.
Devangada Kenchetti's sadlimarada Attani kadu coffee estate and No. 1409 Gauligara Subba's sadlemarada Attani kadu coffee estate.	Mus. Karim Saib's sagina Telapanada wargada Telapanada baliya bané.	No. 1409 Gauligara Subba's sadlemarada Attani kadu coffee estate.	Devangada Kenchetti's sadlemarada Attani kadu coffee estate.

survey and other charges that may become due.
of the purchase money immediately; should he fail to make such deposit the lot will be put up again.
if that day happens to be a Sunday or holiday the payment must be made before noon on the next office day.
be cancelled, the deposit will be forfeited and the land may be again put up to auction. The defaulting purchaser will be liable for any deficiency
been forfeited shall not be reckoned. The defaulting purchaser at the first sale shall moreover have no claim to any surplus that may be realized

for the recovery of arrears of land revenue.
sale or re-sale to be cancelled. The decision of the Superintendent is open to revision by the Chief Commissioner and may be modified or reversed
the sale or re-sale, the same shall be held to have been confirmed by him.
deposit paid by him, but will have no claims to interest or damages.

H. G. THOMSON,
Superintendent.

Deaths registered in the Town and Cantonment of Bangalore for the Week ending 22nd October 1880.

Estimated Population. { Males .. 72,236; Females .. 70,277 } Total... 142,513

Diseases.	M.	F.	Total.
Cholera ...	...	...	...
Small-pox ...	...	...	...
Fevers ...	7	5	12
Bowel-complaints ...	...	...	...
Suicide ...	...	...	...
Wounding ...	...	...	...
Accident ...	...	1	1
Snake-bite or killed by wild beasts.	...	...	...
All other causes ...	10	9	19
Total.....	17	15	32
Births during the week ...	19	13	32

Deaths registered in the Town of Mysore for the Week ending 22nd October 1880.

Estimated Population. { Males .. 29,081; Females .. 28,734 } Total... 57,815

Diseases.	M.	F.	Total.
Cholera ...	...	...	...
Small-pox ...	...	...	...
Fevers ...	9	3	12
Bowel-complaints ...	3	2	5
Suicide ...	...	...	...
Wounding ...	...	...	...
Accident ...	...	...	...
Snake-bite or killed by wild beasts.	...	...	...
All other causes ...	...	...	...
Total.....	12	5	17
Births during the week ...	6	6	12

Deaths registered in the Town and Cantonment of Bangalore for the Week ending 29th October 1880.

Estimated Population. { Males .. 72,236; Females .. 70,277 } Total... 142,513

Diseases.	M.	F.	Total.
Cholera...	...	...	...
Small-pox ...	...	...	...
Fevers...	7	11	18
Bowel-complaints ...	2	...	2
Suicide...	...	...	...
Wounding ...	...	...	...
Accident ...	...	1	1
Snake-bite or killed by wild beasts.	...	...	...
All other causes ...	10	10	20
Total.....	19	22	41
Births during the week ...	26	27	53

Deaths registered in the Town of Mysore for the Week ending 29th October 1880.

Estimated Population. { Males .. 29,081; Females .. 28,734 } Total... 57,815

Diseases.	M.	F.	Total.
Cholera ...	...	...	...
Small-pox ...	...	...	...
Fevers ...	8	5	13
Bowel-complaints ...	5	3	8
Suicide ...	...	...	...
Wounding ...	...	...	...
Accident ...	...	...	...
Snake-bite or killed by wild beasts	...	...	...
All other causes ...	1	...	1
Total.....	14	8	22
Births during the week ...	9	8	17

J. HOUSTON, M. D.,
Surgeon to the Mysore Commn.

23rd November 1880.

Season Report of the Bangalore District for the month of October 1880.

Rain-fall.—The rain-fall was general and abundant throughout the District during the month, and the tanks received a considerable supply of water.

Crops.—Wet and dry crops in good condition. The seeds sown during the month were Bengal-gram, Yedagur paddy and hutchellu; and those harvested were ragi and ground-nuts.

Health.—Generally good.

Mortality.—The deaths numbered 821 during the month of September, against 947 in the preceding month, being a decrease of 126.

Cattle.—Murrain still continued to prevail, chiefly in the Taluks of Hoskote and Closepet; and the number of deaths from this source was 1,274 against 604 in the previous month.

The number of deaths from all causes amounted to 2,677; of these 69 were caused by wild beasts.

Lands.—Lands assessed at Rs. 985—7—7 were taken up for cultivation.

L. RICKETTS,
Dy. Commissioner.

COMMISSARIAT ADVERTISEMENT.

The 15th November 1880.

Sealed tenders in the form used in the Commissariat Department will be received by the Executive Commissariat Officer for the supplies entered in the subjoined schedules up to 1 o'clock on the 29th January 1881, and the tenders will be opened at that hour in presence of those interested who choose to attend.

Tender forms and particulars regarding the contract, and the form of contract, can be obtained on application to the Executive Commissariat Officer, Bangalore.

Articles.	Probable Quantity.	Date of Delivery.	To Whom and Place.	Deposit to accompany Tenders.
				Rs.
Bullocks with drivers Pairs.	2	To be supplied daily at Government Slaughter House for the removal of manure to manure pits during the year 1881—1882.	From the Station Butcher of the Government Slaughter House.	20
Purchase of manure from the Government Slaughter House ..		To be removed from the Government Slaughter House during the year 1881—82.		
Bran, wheat, of good quality lbs.	1,34,300	To be supplied daily to the Mounted Corps from 1st March 1881 to 31st May 1882, in such quantities as may be required.	To the Quarter-Masters of the British Cavalry and three Batteries of the Royal Artillery.	115

Articles.		Probable Quantity.	Date of Delivery.	To Whom and Place.	Deposit to accompany Tenders.
					Rs.
Bags, gunny, Bengal, 1st sort	No.	700	Daily in such quantities as may be required from 1st April 1881 to 31st March 1882.	To the Officer in charge of Government Bakery, Bangalore.	
Red lead	lbs	48			
White lead ..	,,	96			
Cotton rope, ¼ inch ..	Yards.	200			
Do 1 do ..	,,	16			
Linseed oil ..	Bottles.	12			
Lamp oil	,,	500			
Cocoanut oil ..	,,	12			
Lamp thread ..	lbs.	15			
Lamps, tin	No.	3			
Lantern, common ..	,,	2			
Hides, bullocks, dressed	,,	2			
Files of sizes ..	,,	12			
Sulpher	lbs.	12			
Sulmoniac ..	,,	6			
Rosin	,,	6			100
Bengal twine ..	,,	72			
Needles, canvas and gunny	No.	24			
Hemp, twine ..	lbs	3			
Scissors ..	Pairs	2			
Tacks, iron, 1½ inch ..	lbs.	1			
Tacks, copper, ½ inch ..	,,	2			
Grease	,,	288			
Sieves, large ..	No.	300			
Do small ..	,,	200			
Broom, bundles ..	,,	600			
Muslin and soojee round seives	,,	60			
Sieves, bean ..	,,	100			
Coir ropes for hanging muslin sieves	,,	60			
Muslin, 1st sort ..	Pieces.	3			
Do 2nd ,, ..	,,	3			
Scoops, tin ..	No.	6			
Baskets, wheat ..	,,	150			
Salt	lbs.	12,775			
Sugar	,,	4,500			
Dungary, 1st sort ..	Pieces.	40			
Bread, Puls ..	No.	20			
Do baskets ..	,,	10			
Drill, 1st sort ..	Yards.	350			
Pots, tin ..	No.	12			
Tar	Gallons.	50			
Potatoes ..	lbs	250			
Emery powder ..	,,	6			
Do cloth ..	Sheets.	72			
Soda washing ..	lbs.	84			
Soap	,,	60			
Ghee	,,	72			

By Order of the Commissary General,

B. W. MAGRATH, *Colonel,*
Asstt. Commissary General.

Mysore Government Press, Bangalore.—1880.

THE

MYSORE GAZETTE.

Published by Authority.

BANGALORE, SATURDAY, DECEMBER 4, 1880.

Separate paging is given to this Part in order that it may be filed as a separate compilation.

447

PART II.

Notifications by the Judicial Commissioner, &c.

REGISTRATION DEPARTMENT.

ISSUE OF COPIES AND MEMORANDA OF DOCUMENTS UNDER SECTIONS 64 TO 67.

To—The Registering Officers in Mysore and Coorg, Circular No. 14 *of* 1880—81, *dated 2nd December* 1880.

The Government of India in a letter from the Revenue and Agricultural Department to the address of the Chief Commissioner of Mysore and Coorg, No. 47—1657, dated 28th October 1880, has directed attention to a case where the Registrar of a District registered a document under the provisions of Section 30 (*b*) of the Registration Act, but failed to comply with the directions contained in Section 67 of the Act in respect of the transmission of a copy of the document to every Registrar within whose District any part of the property to which the instrument related was situated. The necessary result of this omission was that the record of registration remained incomplete and failed to shew existing encumbrances on the property to which the document registered related. In order to prevent the recurrence of such omissions the Government of India directs the issue of stringent instructions for a strict compliance with the requirements of the law.

2. The special duties of Registrars and Sub-Registrars as described in Sections 64 to 66 of the Act lay down the principle that a Registrar or Sub-Registrar when registering a document which relates to property situated partly in his own and partly in another District or Sub-District (in Mysore) must send a record of the registration to all the Registrars or Sub-Registrars within whose jurisdiction any part of such property is situate ; to Registrars in the form of a copy and to the Sub-Registrars in that of a memo. The Registrar or Sub-Registrar so receiving a copy or a memo of a document is further enjoined to file the same in his register.

3. It is believed that the checks heretofore exercised in the Offices of the District Registrars and the Inspector General have practically obviated omissions of the description referred to, but to secure further assurance on the point, the District Registrars are now requested (1) to examine their own Register No. 1 for the current and a few preceding years and satisfy themselves that the prescribed copies or memoranda have invariably been issued from their Offices, and that all copies of documents received from other Registrars and Sub-Registrars have been duly filed therein ; (2) District Registrars will also make a special investigation on the subject at the next examination of the books of their Sub-Registry Offices taking care to repair any omissions that may be detected.

4. To facilitate the checks for the future, Registrars and Sub-Registrars are requested to enter in brief notes against the number of items in columns 16 and 19 of their B Returns, the names of offices to which they have issued and from which they have received copies or memoranda of documents under Sections 64 to 66.

H. HUDSON,
Inspector General of Registration,
Mysore & Coorg.

NUNDYDROOG DIVISION.

IN THE COURT OF THE DISTRICT JUDGE, NUNDYDROOG DIVISION.

Miscellaneous Application No. 431 *of* 1880.

Munivenkatappa residing in the Cantonment of Bangalore .. *Applicant.*

Whereas Munivenkatappa above named has applied to this Court under Section 101, Clause 4, Act X of 1866, for an order for winding up the Bangalore Brewery Company Limited, and Wednesday the 15th day of December 1880 at 11 A. M. has been fixed for the hearing of the said application, all persons claiming to have any interest in the said Company are hereby called upon to come and see the proceedings on or before the said 15th day of December 1880.

Given under my hand and the seal of the Court this 29th day of November 1880.

T. R. A. THUMBOO CHETTY,
District Judge.

KOLAR DISTRICT.

NOTIFICATION.

The 15*th November* 1880.

Notice is hereby given that sealed tenders will be received up to 9 A. M. on Wednesday the 15th December 1880, by the Superintendent of the Kolar District Jail at Kolar, for the supply by contract of all articles of diet, &c., required for the use of the prisoners confined in the Kolar District Jail, from 1st January to 31st December 1881, both days inclusive.

2. No tenders will be received after the date and hour above named.

3. Tenders to be superscribed, "Tenders for the supply of provisions for the Kolar District Jail."

4. No tenders will be received unless accompanied by a deposit of Rs. 50—0—0 in cash or currency notes.

5. Tenders will be opened by the Superintendent of the District Jail at Kolar in the Jail Office on the date above named in the presence of such tenderers as may choose to attend.

6. All tenders must specify separately the rate per convict per diem for the following classes, *viz* :—

	Rs.	A.	P.
Native laboring males			
Do short-term do			
Do non-laboring males, and females and under-trial ..			
Do juveniles			
European and East Indians			

7. The rates tendered must, besides the articles specified in the undermentioned diet scale, include hospital diet (as per scale), extra to sick, and perishable articles, lamp-oil, lanterns, and repairing the same, copper and earthen cooking vessels and plates for convict messes, baskets for latrine and dry earth, sigékayi for bathing of the convicts in jail, all repairing and tinning of copper utensils, brooms, pots for drinking purposes, milk, bread, sugar, &c., required for children of female convicts, sulphur for fumigating cells, fuller's earth and all other sundry articles exclusive of clothing required to be supplied regularly for the use of the prisoners.

8. The Superintendent reserves to himself the right of rejecting any tender without assigning any reason for so doing.

9. The deposit of the successful tenderer will be retained, and will be forfeited if he fails to execute the contract bond and to furnish security to the amount of Rs. 500—0—0 in cash or Government bonds within one week from the date of the acceptance of his contract being made known to him.

10. No advance of cash will be made to the contractor. Payment for the articles supplied will be made by the Superintendent of the District Jail, as soon as possible, after the 1st of each month.

11. A store room will be made over to the contractor in which he can keep all non-perishable articles. Perishable articles such as meat, &c., must be at the Jail by 7—15 A. M. daily.

12. The contract must not be sublet.

13. A fine not exceeding Rs. 25—0—0 will be levied at the discretion of the Superintendent of the Jail for any infringement of the stipulations of the contract or for the supply of any inferior articles, and, if frequently violated, the contract may be annulled and the security confiscated to Government.

14. The decision of the Superintendent of the Jail to be final in all questions of infringement of contract.

15. The contractor will be bound to purchase vegetables from the jail garden for the use of the prisoners at a fixed rate of 4 pies per lb.

16. The contract is subject to the confirmation of the Inspector General of Prisons.

17. Any further information can be obtained by applying to the Superintendent of the Kolar District Jail from 7 to 9 A. M. on any day.

Table of Diet for all Classes of Native Prisoners in the Kolar District Jail.

Names of Articles.	B Scale for men sentenced to more than 6 months and up to 2 years' rigorous imprisonment.							Men sentenced to rigorous imprisonment for 6 months and under.							Simple—women, and under-trial.							Juvenile Prisoners.						
	Monday.	Tuesday.	Wednesday.	Thursday.	Friday.	Saturday.	Sunday.	Monday.	Tuesday.	Wednesday.	Thursday.	Friday.	Saturday.	Sunday.	Monday.	Tuesday.	Wednesday.	Thursday.	Friday.	Saturday.	Sunday.	Monday.	Tuesday.	Wednesday.	Thursday.	Friday.	Saturday.	Sunday.
	oz	oz	oz	oz	oz	oz	oz	oz	oz	oz	oz	oz	oz	oz	oz	oz	oz	oz	oz	oz	oz	oz	oz	oz	oz	oz	oz	oz
Rice ...	...	12	...	12	...	12	...	...	12	...	...	...	12	...	...	...	...	...	...	...	20	...	10	...	...	...	10	...
Ragi ...	24	12	24	12	24	12	24	24	12	24	24	24	12	24	20	20	20	20	20	20	...	20	10	20	20	20	10	20
Dál or ballar ...	4	2	4	2	4	2	4	3	2	3	3	3	3	3	2	2	2	2	2	2	2	2	2	2	2	2	2	2
Meat (with bone.)	...	3	...	3	...	3	...	...	4	...	...	...	...	...	..	...	...	...	...	...	...	...	3	...	...	...	3	...
Tyre ...	...	8	...	8	...	8	...	...	...	...	...	...	...	...	...	8	...	...	...	8	...	...	5	...	...	...	5	...
Gingelly-oil ...	...	$\frac{1}{4}$	...	$\frac{1}{4}$	...	$\frac{1}{4}$	$\frac{3}{8}$	$\frac{1}{8}$	$\frac{1}{8}$	$\frac{1}{8}$	$\frac{1}{8}$	$\frac{1}{8}$	$\frac{1}{8}$	$\frac{1}{8}$	$\frac{1}{8}$	$\frac{1}{8}$	$\frac{1}{8}$	$\frac{1}{8}$	$\frac{1}{8}$	$\frac{1}{8}$	$\frac{1}{8}$	...	$\frac{1}{16}$	$\frac{1}{16}$	$\frac{1}{16}$	...	$\frac{1}{16}$	$\frac{1}{16}$
Ghee ...	$\frac{3}{8}$	...	$\frac{3}{8}$	...	$\frac{3}{8}$	...	..	...	...	...	...	...	...	...	...	...	...	...	...	...	...	$\frac{1}{8}$	...	...	...	$\frac{1}{8}$	...	...
Tamarind ...	$\frac{1}{2}$	$\frac{1}{2}$	$\frac{1}{2}$	$\frac{1}{2}$	$\frac{1}{2}$	$\frac{1}{2}$	$\frac{1}{2}$	$\frac{1}{2}$	$\frac{1}{2}$	$\frac{1}{2}$	$\frac{1}{2}$	$\frac{1}{2}$	$\frac{1}{2}$	$\frac{1}{2}$	$\frac{1}{2}$	$\frac{1}{2}$	$\frac{1}{2}$	$\frac{1}{2}$	$\frac{1}{2}$	$\frac{1}{2}$	$\frac{1}{2}$	$\frac{3}{8}$	$\frac{3}{8}$	$\frac{3}{8}$	$\frac{3}{8}$	$\frac{3}{8}$	$\frac{3}{8}$	$\frac{3}{8}$
Salt ...	$\frac{3}{4}$	$\frac{3}{4}$	$\frac{3}{4}$	$\frac{3}{4}$	$\frac{3}{4}$	$\frac{3}{4}$	$\frac{3}{4}$	$\frac{5}{8}$	$\frac{5}{8}$	$\frac{5}{8}$	$\frac{5}{8}$	$\frac{5}{8}$	$\frac{5}{8}$	$\frac{5}{8}$	$\frac{5}{8}$	$\frac{5}{8}$	$\frac{5}{8}$	$\frac{5}{8}$	$\frac{5}{8}$	$\frac{5}{8}$	$\frac{5}{8}$	$\frac{1}{2}$	$\frac{1}{2}$	$\frac{1}{2}$	$\frac{1}{2}$	$\frac{1}{2}$	$\frac{1}{2}$	$\frac{1}{2}$
Curry powder ...	$\frac{3}{8}$	$\frac{3}{8}$	$\frac{3}{8}$	$\frac{3}{8}$	$\frac{3}{8}$	$\frac{3}{8}$	$\frac{3}{8}$	$\frac{5}{16}$	$\frac{5}{16}$	$\frac{5}{16}$	$\frac{5}{16}$	$\frac{5}{16}$	$\frac{5}{16}$	$\frac{5}{16}$	$\frac{5}{16}$	$\frac{5}{16}$	$\frac{5}{16}$	$\frac{5}{16}$	$\frac{5}{16}$	$\frac{5}{16}$	$\frac{5}{16}$	$\frac{5}{16}$	$\frac{5}{16}$	$\frac{5}{16}$	$\frac{5}{16}$	$\frac{5}{16}$	$\frac{5}{16}$	$\frac{5}{16}$
Onions ...	$\frac{1}{2}$	$\frac{1}{2}$	$\frac{1}{2}$	$\frac{1}{2}$	$\frac{1}{2}$	$\frac{1}{2}$	$\frac{1}{2}$	$\frac{1}{2}$	$\frac{1}{2}$	$\frac{1}{2}$	$\frac{1}{2}$	$\frac{1}{2}$	$\frac{1}{2}$	$\frac{1}{2}$	$\frac{1}{2}$	$\frac{1}{2}$	$\frac{1}{2}$	$\frac{1}{2}$	$\frac{1}{2}$	$\frac{1}{2}$	$\frac{1}{2}$	$\frac{1}{2}$	$\frac{1}{2}$	$\frac{1}{2}$	$\frac{1}{2}$	$\frac{1}{2}$	$\frac{1}{2}$	$\frac{1}{2}$
Garlic ...	$\frac{1}{16}$	$\frac{1}{16}$	$\frac{1}{16}$	$\frac{1}{16}$	$\frac{1}{16}$	$\frac{1}{16}$	$\frac{1}{16}$	$\frac{1}{32}$	$\frac{1}{32}$	$\frac{1}{32}$	$\frac{1}{32}$	$\frac{1}{32}$	$\frac{1}{32}$	$\frac{1}{32}$	$\frac{1}{32}$	$\frac{1}{32}$	$\frac{1}{32}$	$\frac{1}{32}$	$\frac{1}{32}$	$\frac{1}{32}$	$\frac{1}{32}$	$\frac{1}{64}$	$\frac{1}{64}$	$\frac{1}{64}$	$\frac{1}{64}$	$\frac{1}{64}$	$\frac{1}{64}$	$\frac{1}{64}$
Vegetables ...	6	6	6	6	6	6	6	6	6	6	6	6	6	6	6	6	6	6	6	6	6	5	5	5	5	5	5	5
Firewood* ...	$1\frac{1}{2}$ or 2 lbs daily.							$1\frac{1}{2}$ or 2 lbs daily.							$1\frac{1}{2}$ or 2 lbs daily.							$1\frac{1}{2}$ or 2 lbs daily.						

* Where closed fire-places are in use, $1\frac{1}{2}$ lbs. of firewood will be served out; where open fire-places 2 lbs.

Men who do not eat meat to get 4 ozs. of dál and 8 drams of ghee on meat days. 2 drams of salt to be issued and eaten when sprinkled over the food.

Men who do not eat meat to get 3 ozs. of dál and 8 drams of ghee on meat days.

Women and juveniles to get tyre if sentenced over 6 months; under-trial prisoners, tyre and meat if over 2 months in confinement.

Rice may be given entirely to any under-trial prisoner unaccustomed to ragi and to any one whom ragi disagrees with, at the recommendation of Medical Officer; juveniles under 14 years to get 16 ozs. of grain and 2 ozs. of meat.

Scale of Diet—Hospital.

Articles of Diet.	Monday.		Tuesday.		Wednesday.		Thursday.		Friday.		Saturday.		Sunday.	
	oz.	dr.	oz.	dr.	oz.	dr.	oz.	dr.	oz.	dr.	oz.	dr.	oz.	dr.
Rice	20	...	20	...	20	...	20	...	20	...	20	...	20	...
Ragi	...	...	...	...	...	...	...	...	...	...	...	...	...	...
Dal or ballar	3	...	2	...	3	...	2	...	3	...	2	...	3	...
Meat (with bones)	...	...	3	...	..	...	3	...	...	...	3	...	...	...
Tyre	...	...	8	...	...	...	8	...	...	...	8	...	...	...
Gingelly oil	...	...	...	4	...	...	...	4	...	...	...	4	...	4
Ghee	...	4	..	...	...	4	...	...	...	4	...	...	...	...
Tamarind	...	8	...	8	...	8	...	8	...	8	...	8	...	8
Salt	...	10	...	10	...	10	...	10	...	10	...	10	...	10
Curry powder	...	6	...	6	...	6	...	6	...	6	...	6	...	6
Onions	...	8	...	8	...	8	...	8	...	8	...	8	...	8
Garlic	...	1	...	1	...	1	...	1	...	1	...	1	...	1
Vegetables	4	...	4	...	4	...	4	...	4	...	4	...	4	...
Firewood	$1\frac{1}{2}$ or two lbs. daily.													

Men who do not eat meat to get 3 ozs. of dál, 8 ozs. of tyre and 4 dr. of ghee on meat days.

Articles comprising the different head of diets per day for sick in Jail Hospital in cases where they are absolutely required.

Spoon.		Milk.		Low.		Full.	
Ságu ...	4 oz.	Bread ...	12 oz.	Mutton in broth ...	6 oz.	Mutton for curry ...	8 oz.
Sugar ...	2 „	Rice ...	12 „	Bread ...	12 „	Rice ...	8 „
Milk ...	6 „	Milk ...	2 pts.	Butter or ghee ...	1 „	Curry powder ...	$\frac{1}{2}$ „
Rice ...	2 „	Sugar ..	2 oz.	Onions ...	1 „	Country vegetables ...	4 „
Salt ...	2 dr.	Rice for cunjee	2 „	Flour ...	$\frac{1}{2}$	Hoppers	6 No.
		Salt ...	2 dr.	Salt ...	1 „	Butter or ghee ...	1 oz
						Salt ...	1 „

A. RANGASAMAIENGAR,
Supt., District Jail.

TUMKUR DISTRICT.

The 8th November 1880.

NOTICE UNDER SECTION 354 OF THE CODE OF CIVIL PROCEDURE.

It is hereby declared that the undermentioned person is an insolvent and as such entitled to the benefit of the provisions of Chapter XX of the Code of Civil Procedure, and it is ordered that the said insolvent be and is hereby discharged from custody and from all liability to be arrested or imprisoned in respect of any of the debts mentioned in the schedule filed with records of the case concerned.

Kumbar Siddappa .. In Insolvent Case No. 12 of 1880.

E. CHITAMBRAM IYER, *Sub-Judge.*

MYSORE DISTRICT.

The 23rd November 1880.

NOTICE UNDER SECTION 354 OF THE CODE OF CIVIL PROCEDURE.

It is hereby declared that the undermentioned person is an insolvent and as such entitled to the benefit of the provisions of Chapter XX of the Code of Civil Procedure, and it is ordered that the said insolvent be and is hereby discharged from custody and from all liability to be arrested or imprisoned in respect of any of the debts mentioned in the schedule filed with the records of the case.

Nanja Shetti .. .. In Insolvent Case No. 15 of 1880.

T. NARAHARI RAO, *Sub-Judge.*

COORG.

NOTIFICATIONS.

The 11th November 1880.

Notice is hereby given for general information that the arrears due on the undermentioned coffee estates in Coorg being still unpaid, they will be put up to public auction at the 2nd Assistant Superintendent's Office at Mercara, at noon on Monday the 20th December 1880, and sold to the highest bidder above the upset price.

Survey No.	Title-deed No.	Name of Defaulter.	Name of Estate.	Village, Nad and Taluk.	Area.	Boundaries.				Assessment for 1879-80.			Costs and Charges.			Total.		
						North.	South.	East.	West.									
109	114	Mr. W. V. Drummond.	Lilford ...	Hakatur Village in Kaggodlunad of the Mercara Taluk.	113·93	Iyappa Davu ...	Government bâne ...	B. Bopu's... ...	Government bâne ...	227	13	8	4	4	6	232	2	2
729	131	Mrs. Annie Margaret Fowler.	Glen Moriston	Heggal in Yedenalknad of the Yedenalknad Taluk	282·81	Fowler estate 3rd part Government bane.	Fowler's jungle Bradford ...	Fowler's jungle and Rose's jungle..	Fowler's jungle ...	565	9	11	4	4	6	569	14	5

N. B.—The purchaser will be subject to pay the assessment for the current year, *viz.*, 1880—81.

Conditions of Sale.—Para.—1. The highest bidder will be the purchaser subject to confirmation of sale, provided he deposit 25 per cent of the purchase money immediately; should he fail to make such deposit the lot will be put up again.

2. The balance of the purchase money must be paid before noon of the 30th day from the date of sale, but if that day happens to be a Sunday or holiday the payment must be made before noon on the next office day.

3. Should the purchaser fail to pay the balance of the purchase money within the time fixed, the sale will be cancelled, the deposit will be forfeited and the land may be again put up to auction. The defaulting purchaser will be liable for any deficiency in the amount realized by the re-sale, and in the calculation of such deficiency the deposit that has been forfeited shall not be reckoned. The defaulting purchaser at the first sale shall moreover have no claim to any surplus that may be realized by the re-sale.

4. Any amount due from a defaulting purchaser may be recovered under the rules or practice in force for the recovery of arrears of land revenue.

5. All sales and re-sales shall be subject to confirmation by the Superintendent of Coorg, who may order any sale or re-sale to be cancelled. The decision of the Superintendent is open to revision by the Chief Commissioner and may be modified or reversed by him. If within three months from the date of sale, the Superintendent shall not have reversed the sale or re-sale, the same shall be held to have been confirmed by him.

6. In any case in which a sale or re-sale may be cancelled, the purchaser will receive back the money or deposit paid by him, but will have no claims to interest or damages.

The 11th

Notice is hereby given for general information that the Government dues on the undermentioned
Superintendent's Office at Mercara at noon on Monday the 20th December 1880,

No.	Title-deed No.	Name of Defaulter.	Name of Estate.	Village, Nad and Taluk.	Area.	For 1876—77. Assessment.	Difference of Assessment.	Survey Charges.	Total.
				Kiggatnad Taluk.					
2484	...	Kerianidira Subbaiya.	Malakekadu ...	Poradu in Anjigerinad.	9·55	...	...	...	...
115	107	Bittiyanda Aiyappa.	Narakadumalé ...	Rudraguppe in Bettiyatnad.	157·21	...	...	...	...
2389	...	Kuppanda Subbaiya...	Najakolli ...	Do do	42·24	...	...	...	...
124	112	Do Chinnappa...	Kattekadu ...	Do do	48·53 Grass. 6·16 42·37	...	...	...	...
793	316	Koluvandra Iyappa ...	Bembukadu ...	Nokya do ...	158·07	...	...	...	...
2275	...	Kanjitanda Kariyappa.	Angarekadu ...	Badaga do ...	9·53 Grass. 1·6 8·47	...	...	...	...
2279	...	Do do ...	Todiyamottepaisari.	Do do ...	0·14	...	...	...	...
4352	...	Bettakurubara Gottugara Kala.	Gorikadu or Kallumottepaisari.	Nemmale in Tavalgerimurnad.	8·81	...	...	...	...
				Nanjarajapatna Taluk.					
1174	361	Iymudiyana Medappa.	Batta kadu ...	Nidavattu in Gadinad.	15·29	...	...	...	...
				Yelsavirshime Taluk.					
522	...	Goldsmith Yellamma.	Kanremaradakadu ...	Masgada in Bilhada Hobli.	27·48	...	...	...	...
				Padinalknad Taluk.					
3347	...	Babbira Medappa ...	Balangadu ...	Kolagadallu in Bengunad.	2·51	...	...	...	...
4210	...	Sthanika Isvaraiya ...	Balangolli ...	Tanninmani in Tavunad.	15·62	...	...	...	...
3220	...	Konkani Dassappa ...	Kodambarikekadu ...	Tavuru do	1·30	...	...	...	...
2894	...	G. Poreyana Kariyanna.	Molayatti Parambu...	Kadiyatturu in Kuyangerinad.	11·01	...	...	...	...
103	...	Br. Bijapura Rambayi.	Billiyakollitundu ...	Bettattur in Kuyangerinad.	253·38	...	...	...	...

November 1880.

Coffee Estates in Coorg being still unpaid, they will be put up to public auction at the 2nd Assistant and sold to the highest bidders above the upset price of the outstandings.

For 1877—78.				For 1878—79.				For 1879—80.			
Assessment.	Difference of Assessment.	Survey Charges.	Total.	Assessment.	Difference of Assessment.	Survey Charges.	Total.	Assessment.	Difference of Assessment.	Survey Charges.	Total.
...	...	...	...	19 1 7	...	...	19 1 7	19 1 7	...	...	19 1 7
...	...	...	...	314 6 9	...	...	314 6 9	...	...	...	...
...	...	...	...	84 7 8	...	...	84 7 8	84 7 8	...	...	84 7 8
...	...	...	...	84 11 10	...	...	84 11 10	84 11 10	...	...	84 11 10
...	...	...	...	316 2 2	...	...	316 2 2	316 2 2	...	...	316 2 2
...	...	...	...	16 15 0	...	...	16 15 0	...	...	...	...
...	...	...	...	0 14 1	...	...	0 14 1	...	...	...	...
...	...	...	...	...	19 6 6	...	19 6 6	...	...	...	...
13 9 4	...	...	13 9 4	30 9 4	...	...	30 9 4	30 9 4	...	...	30 9 4
23 13 4	...	...	23 13 4	54 15 4	...	...	54 15 4	54 15 4	...	...	54 15 4
...	...	...	...	5 0 4	16 1 4	...	21 1 8	...	...	...	...
...	...	...	...	...	...	...	...	31 3 10	...	...	31 3 10
...	...	...	...	2 9 7	...	...	2 9 7	...	...	...	...
...	...	...	...	...	...	...	...	22 0 4	...	...	22 0 4
...	...	...	...	...	...	...	...	512 12 2	...	...	512 12 2

No.	Title-deed No.	Name of Defaulter.	Name of Estate.	Village, Nad and Taluk.	Area.	Total. Assessment.	Difference of Assessment.	Survey Charges.	Total.	Process Charges.	Grand Total.
				Kiggatnad Taluk.							
2484	...	Karianidira Subbaiya.	Malakekadu ...	Poradu in Anjigerinad.	9·55	38 3 2	...	...	38 3 2	4 4 6	42 7 8
115	107	Bittiyanda Aiyappa.	Narakadumalé ...	Rudraguppe in Battiyatnad.	157·21	314 6 9	...	...	314 6 9	4 4 6	318 11 3
2389	...	Kuppanda Subbaiya...	Najakolli ...	Do do	42·24	168 15 4	...	...	168 15 4	4 4 6	173 3 10
124	112	Do Chinnappa ...	Kattekadu ...	Do do	48·53 Grass. 6·16 42·37	169 7 8	...	...	169 7 8	4 4 6	173 12 2
793	316	Koluvandra Iyappa...	Bembukadu ...	Nokya do	158·07	632 4 4	...	...	632 4 4	4 4 6	636 8 10
2275	...	Kanjitanda Kariyappa.	Angarekadu ...	Badaga do	9·53 Grass. 1·6 8·47	16 15 0	...	...	16 15 0	4 4 6	21 3 6
2279	...	Do do ...	Todiyamotte paisari.	Do do	0·47	0 14 1	...	...	0 14 1	4 4 6	5 2 7
4352	...	Bettakurubara Gottugara Kala.	Gorikadu or Kallumotte paisari.	Nemmale in Tavalgerimurnad.	8·81	19 6 6	...	...	19 6 6	4 4 6	23 11 0
				Nanjarajapatna Taluk.							
1174	361	Iymudiyana Medappa.	Betta kadu ...	Nidavattu in Gadinad.	15·29	74 12 0	...	...	74 12 0	4 4 6	79 0 6
				Yelsavirshime Taluk.							
522	...	Goldsmith Yammale.	Kanremarada kadu ...	Masgada in Bilahada Hobli.	27·48	133 12 0	...	...	133 12 0	4 4 6	138 0 6
				Padinalknad Taluk.							
3347	...	Babbira Medappa ...	Balangadu ...	Kolagadallu in Bengunad.	2·51	5 0 4	16 1 4	...	21 1 8	4 4 6	25 6 2
4210	...	Sthanika Isvaraiya ...	Balangolli ...	Tannimani in Tavunad.	15·62	31 3 10	...	...	31 3 10	4 4 6	35 8 4
3220	...	Kankani Dasappa ...	Kodambarike kadu ...	Tevuru do ...	1·30	2 9 7	...	...	2 9 7	4 4 6	6 14 1
2894	...	G. Poreyana Kariyanna.	Molayatti parambu ...	Kadiyatturu in Kuyangerinad.	11·01	22 0 4	...	...	22 0 4	4 4 6	26 4 0
103	...	Br. Bijapura Rambayi.	Balliyakollitundu ...	Bettattur in Kuyangerinad.	256·38	512 12 2	...	...	512 12 2	4 4 6	517 0 8

Boundaries.			
North.	South.	East.	West.
Paisari land.	Paisari land and Cheriya Medri Iyappa's jamma land.	Paisari land.	No. 2485 Mallengala Ponnappa and Muddaiya's Malakekadu.
Mr. Rose's and Government jungle.	Ryots' jungle.	Ryots' bané.	Mr. Savaghe and Kariyamalle.
Sarkar paisari Nagakolli.	Sarkar paisari Nagakolli and Mr. Drummond's Nagakolli estate.	Mr. Drummond's Najakolli estate.	Sarkar paisari Nagakolli.
Grass bané and Ryots' bané.	B. Kariyappas.	Government jungle and Ryots' bané.	Clifton and grass bané.
Paisari jungle, Camping ground for troops, paisari land and grass land.	Paisari jungle.	Paisari jungle.	Paisari jungle.
No. 2280 Kongandra Biddaiya's Devarapalli estate.	Paisari Siripalimotte grass land and paisari kolli jungle.	Kangitandra Kariyappa's Tumbemadu jamma Kokaribelu warga and Aiyappadevara jungle.	Paisari Siripalimotte grass land and Sarkar perambu grass land.
Kangitandra Kariyappa's jahagir, Baliyatevawargada Peggu bané.	No. 2277 Malavandra Ganapati's Todiyamotte paisari coffee estate and Kangitandra Kariyappa's jahagir baliyatevawargada Peggu bané	Kangitandra Kariyappa's jahagir baliyateva wargada Peggu bané.	No. 2277 Malavandra Ganapati's Todiyamotte paisari coffee estate and No. 2273 Malavandra Atchaiya's Todiyamotte paisari coffee estate.
Paisari forest.	Paisari forest.	Paisari forest.	Paisari forest.
Paisari.	Paisari.	Paisari.	KariraKuttaiya's jamma bané.
Sarkar paisari land.	Sarkar paisari land.	Sarkar paisari land.	Goldsmith Viranna and Sarkar paisari land.
Sarkar paisari grass land.	Kumbara Somusmotte bané kadu coffee and Devangada Aliya's bané kadu, Sarkar paisari grass land.	Bidandi Devaiya's mottebané kadu.	Sarkar paisari grass land.
Paisari Balakadu jungle.	Kodi Krishnaiya's Balangolli estate.	Palakadu paisari motte bané, Br. Rudraiya's gundikadu and Bellipadi Monna's jamma Pitlabali wargada Dodda bané.	Jevalebenda motte paisari bané and Paladaka Subbu's jamma, Pellipalina Kandakadu wargada Balangolli bané.
A. Kunna's Nadumateva wargada Kulukanti jamma bané.	Government paisari Kadambarike grass bané and K. Subbaiya's brother Krishnaiya's Kodambarike wargada sagu paddy field.	K. Subbaiya's brother Krishnaiya's Kodambarike wargada sagu paddy field.	A. Kunna's Nadumateva wargada Kulukanti jamma bané and Government paisari Kodambarike grass bané.
Kenganda Senkra's Aditeva wargada Aramanedalada Molayatti parambu, 2nd bit jamma and Tore Akkamma's Pudiyatevada warga jamma Boyandane bané and Koppada Bellu's Malliteva wargada jamma mokki bané.	Maleyara Belli's Molayetti parambu, Billavara Kariya's Molayetti parambu, Madivala Karimbu's Molayetti parambu and paisari kadu.	No. 2893 Pudiya Ammakka's Molayetti parambu paisari Chaliyanda Bellu's Molayetti parambu and paisari kadu.	Kenganda Senkra's Aditeva wargada Aramanedalada Molayetti parambu 2nd bit jamma.
Mr. Mann's jungle.	Grass hill.	Mr. D. Stewart's estate.	Mr. Stewart's jungle.

No.	Title-deed No.	Name of Defaulter.	Name of Estate.	Village, Nad and Taluk.	Area.	For 1876—77. Assessment.	Difference of Assessment.	Survey Charges.	Total.
				Padinalknad Taluk.					
4086	...	Chauri Ponnappa ...	Pallibakkadatundu ...	Bettatur in Kuyangerinad.	186·80 Devara kadu 39·93 146·87	...	...	...	...
3231	...	Washerman Subba ...	Joyiparekadu ...	Bettageri do ...	3·93	...	...	...	...
				Mercara Taluk.					
1299	...	Nachabhat Janardanabhat	Kadubané ...	Kaggodlu in Kaggodlunad.	16·21	...	...	...	...
1301	...	Subramannya Jois ...	Koradakadu ...	Do do ...	15·40	...	...	...	...
2020	...	B. Mandappa ...	Bakkadabané ...	Biligeri do ...	51·71	103 6 10	...	...	103 6 10
488	...	Br. Subrao ...	Anekundadapaisari ...	Kaggodlu do ...	27·86	...	473 11 2	5 4 0	478 15 2
2200	...	Br. Subrao ...	Kayamkadu ...	Mekeri do ...	19·09	...	...	...	...
1665	365	Biddandra Boppanna.	Tombatamané ...	Hakatturu in do ...	82·53 Grass 3·83 78·70	...	234 3 0	...	234 3 0
1592	...	Mus. Jamal ...	Hosabanémottekadu.	Máde in do ...	1·42	...	...	...	...
80	...	Br. Krishnamachari.	Suttumotte ...	Mekeri in do ..	5·97	11 15 0	...	...	11 15 0
1833	...	Kuttatti Changappa.	Kurgandri kadu ...	Kotageri in do ...	7·72	15 8 0	...	...	15 8 0
1410	...	G. Dari... ...	Talemaradu Athanikadu.	Do do ...	1·41	...	...	...	...

For 1877—78.				For 1878—79.				For 1879—80.			
Assessment.	Difference of Assessment.	Survey Charges.	Total.	Assessment.	Difference of Assessment.	Survey Charges.	Total.	Assessment.	Difference of Assessment.	Survey Charges.	Total.
...	...	...	...	...	...	...	...	249 2 7	...	...	249 2 7
...	...	...	...	...	...	...	...	7 2 4	...	...	7 2 4
32 7 5	...	...	32 7 5	32 7 5	...	...	32 7 5	32 7 5	...	...	32 7 5
...	...	...	...	18 12 10	...	...	18 12 10	30 12 10	...	...	30 12 10
103 6 10	...	...	103 6 10	103 6 10	...	...	103 6 10	103 6 10	...	...	103 6 10
...	...	...	...	55 11 8	...	...	55 11 8	55 11 8	...	...	55 11 8
38 2 11	217 1 6	3 9 0	258 13 5	38 2 11	...	...	38 2 11	38 2 11	...	...	8 2 11
...	...	...	...	...	...	...	...	157 6 5	...	...	157 6 5
...	...	...	...	2 13 4	...	...	2 13 4	2 13 4	...	...	2 13 4
...	...	...	...	11 15 0	...	...	11 15 0	11 15 0	...	...	11 15 0
...	...	...	...	15 8 0	...	...	15 8 0	15 8 0	...	...	15 8 0
...	...	...	...	2 13 0	...	...	2 13 0	2 13 0	...	...	2 13 1

No.	Title-deed No.	Name of Defaulter.	Name of Estate.	Village, Nad and Taluk.	Area.	Total. Assessment.	Total. Difference of Assessment.	Total. Survey Charges.	Total. Total.	Process Charges.	Grand Total.
			Padinalknad Taluk.								
4086	...	Chauri Ponnappa ...	Pallibakkadatundu ...	Bettatur in Kuyangerinad.	186·80 Devara kadu. 39·93 146·87	249 2 7	...	...	249 2 7	4 4 6	253 7 1
3231	...	Washerman Subba ...	Joyiparekadu ...	Bettageri do	3·98	7 2 4	...	...	7 2 4	4 4 6	11 6 10
			Mercara Taluk.								
1299	...	Nachabhat, Janardanabhat.	Kadubané ...	Kaggodlu in Kaggodlunad.	16·21	97 6 3	...	...	97 6 3	4 4 6	101 10 9
1301	...	Subramanyajois ...	Koradakadu ...	Do do	15·40	49 9 8	...	...	49 9 8	4 4 6	53 14 2
2020	...	B. Mandappa ...	Bakkadabané ...	Biligeri do	51·71	413 11 4	...	...	413 11 4	4 4 6	417 15 10
488	...	Br. Subrao ...	Anekundadapaisari ...	Kaggodlu do	27·86	111 7 4	473 11 2	5 4 0	590 6 6	4 4 6	594 11 0
2260	...	Br. Subrao ...	Kayamkadu ...	Mekeri do	19·09	114 8 9	217 1 6	3 9 0	335 3 3	4 4 6	339 7 9
1685	365	Biddandra Boppanna.	Tombattamané ...	Hakatturu in do	82·53 Grass 3·83 78·70	157 6 5	234 3 0	...	391 9 5	4 4 6	395 13 11
1592	...	Mus. Jamal ...	Hosabanemottekadu.	Máde in do	1·42	5 10 8	...	...	5 10 8	4 4 6	9 15 2
80	...	Br. Krishnamachari.	Suttumotte ...	Mekeri in do	5·97	35 13 0	...	...	35 13 0	4 4 6	40 1 6
1833	...	Kuttatti Changappa.	Kungandrikadu ...	Kotageri in do	7·72	46 8 0	...	...	46 8 0	4 4 6	50 12 6
1410	...	G. Dasi... ...	Talemarada Athanikadu.	Do do	1·41	5 10 0	...	...	5 10 0	4 4 6	9 4 6

Conditions of Sale.—Para.—N, *B.*—The purchaser will be subject to pay the assessment for the current year *viz.*, 1880—81, as well as

1. The highest bidder will be the purchaser subject to confirmation of sale, provided he deposit 25 per cent
2. The balance of the purchase money must be paid before noon of the 30th day from the date of sale, but
3. Should the purchaser fail to pay the balance of the purchase money within the time fixed, the sale will in the amount realized by the re-sale, and in the calculation of such deficiency the deposit that has by the re-sale.
4. Any amount due from a defaulting purchaser may be recoverd under the rules or practice in force
5. All sales and re-sales shall be subject to confirmation by the Superintendent of Coorg, who may order any by him. If within three months from the date of sale, the Superintendent shall not have reversed
6. In any case in which a sale or re-sale may be cancelled, the purchaser will receive back the money or

Boundaries.			
North.	South.	East.	West.
Somaga Saiya's Palli Bakkada tundu Yelada estate and Somaga Saiya's Palli Bakkada tundu Ilachi estate Sarkar paisari kadu.	Sarkar paisari kadu.	Mangandri Belliyappa's Chembadakolli tundu Yelada estate and Padamari Devara kadu and Mangandri Belliyappa's Chambada kolli tundu Yelada estate.	Padamari Devaratandimotte kadu and Captain Taylor and Company's Bunter coffee estate.
Kadle Medu's gundi teva warga paddy field Kadle Medu's Joyipare kadu paisari coffee.	Patel Ranganna's Balamanda warga jamma jungle.	Rachavalada Venkata's Joyipare kadu and Bantra Jattanna's Joyipare kadu.	Genge Subta's jamma Irana warga bané and Niyane Timmaiya's Tingala warga jamma jungle.
Horurnurokalnad Kodagadalu village Sarkar kadu bané.	Kagodlunad, Kagodlu village, Sarkar kadubané.	Horurnurokalnad Kodagadalu village, Sarkar kadubané.	Kagodlunad, Kagodlu village, Sarkar kadu búmi.
Honna Kote Kunnappa's jammada Muttira wargada kadu bané and Brahman Govindaiya's Sagina Irumanda wargada Irumandane.	Teluru Ukkanna's jammada Kungirana wargada kadu bané boundary of Hakaturu village and Aramane kadang.	Br. Kukke Lingaiya's Sagina Boradira wargada Govinda bané and boundary of Hakaturu village and Aramane kadang.	Mandri Puttappa's jammada Podiya wargada kadu bané and Teluru Ukkanna's jammada Kungirana wargada kadu bané.
Masaligauda's Nayikuppa jammada grass land Korgi Akateva warga and Telugara Naranappa's sagina kadu bané grass land Chettirandabaliyateva warga.	Manichagauda's Karani bané jammada grass land Bettanda Baliyatevawarga and Iyappa Devara kadu.	Telugara Narnappa's sagina kadu bané grass land Chattiranda baliyatevawarga jungle Kokale baliya and Brahman Subbaiya's Totirane sagina teva warga.	Brahman Saraswati Krishnaiya's Muri bané sagina grass land Bettanda warga and Masaligauda's Nayikuppa jammada grass land Korji Akateva warga.
Sarkar paisari.	Sankrabhatta and Govindabhatta.	Kuruvanu Muttanna and Sarkar paisari.	Ramabhatta, Nacha bhatta and Janardana bhatta.
Kuttatti Iyappanna's Kullukulu estate and Major Martin's Kullu kulu estate and paisari kayam kadu motte grass hill.	Minachya's sagu Tirumudi wargada tota bané and Brahman Subramanya's kayam kadu estate.	Paisari kayam kadu motte grass hill and Brahman Subramannaiya's kayam kadu estate.	Kayam kadu paisari bané.
Bette Iyappa's Devara bané and Kenjeri kadu paisari.	Government paisari Tombattamane kadu.	Ammattanna Pennappa's Kenjeri kadu coffee estate and Government paisari Tombattamane kadu.	Mr. Drummond's Thombattamane coffee estate.
No. 1437 Krishnappa's Hosabané motte paisari coffee estate.	V. Muniyappa's Hosabané motte paisari mané hitlu and No. 1383 V. Muniyappa's Hosabané motte paisari coffee estate.	Road.	No. 1383 V. Muniyappa's Hosabané motte paisari coffee estate and No. 1585 Mus. Jaher Khan's Hosabané motte paisari coffee estate.
Syed Jamal's.	Road.	Jaffer Sait's.	Mahomed Husen's.
Maktum Saib.	Maktum Saib and Channabasappa's jamma jungle.	Maktum Saib.	Channabasappa's jamma jungle and Udiyandra Mandanna.
Devangada Kenchetti's sadlimarada Attani kadu coffee estate and No. 1409 Gauligara Subba's sadlemarada Attani kadu coffee estate.	Mus. Karim Saib's sagina Telapanada wargada Telapanada baliya bané.	No. 1409 Gauligara Subba's sadlemarada Attani kadu coffee estate.	Devangada Kenchetti's sadlemarada Attani kadu coffee estate.

survey and other charges that may become due.
of the purchase money immediately; should he fail to make such deposit the lot will be put up again.
if that day happens to be a Sunday or holiday the payment must be made before noon on the next office day.
be cancelled, the deposit will be forfeited and the land may be again put up to auction. The defaulting purchaser will be liable for any deficiency
been forfeited shall not be reckoned. The defaulting purchaser at the first sale shall moreover have no claim to any surplus that may be realized

for the recovery of arrears of land revenue.
sale or re-sale to be cancelled. The decision of the Superintendent is open to revision by the Chief Commissioner and may be modified or reversed
the sale or re-sale, the same shall be held to have been confirmed by him.
deposit paid by him, but will have no claims to interest or damages.

H. G. THOMSON,
Superintendent.

SEASON REPORTS FOR THE MONTH OF OCTOBER 1880.

Kolar District.

Rain-fall.—The average rain-fall during the month was 7 inches and 85 cents.

Lands.—Lands assessed at Rs. 1,596—13—1 were taken up for cultivation, while none were relinquished during the month.

Seeds sown—Horse-gram, inferior sesamum and coriander.

Crops—Were good.

Crops harvested—Ragi, sajje and sáme.

Public Health.—On the whole good.

Casualties among Cattle.—	In September.	In October.
Cows and bulls	1,517	1,297
Buffaloes	300	266
Sheep and goats	1,796	1,022
Horses	7	7
Asses .	24	26
Total....	3,644	2,618

A. RANGASAMAIENGAR,
For Dy. Commr.

Mysore District.

Rain.—Heavy rain, average nearly 8 inches, fell throughout the District.

Crops.—All crops good. Bengal-gram, coriander seed, and cotton were sown, while sugar-cane, ragi, and lamp-oil seed were harvested during the month. Harvest returns also good.

Health.—Generally good.

Cattle.—Murrain still very prevalent. Accounts for 970 casualties against 496 in last month. The number of cattle died from all other causes was 1,152 including 43 destroyed by wild beasts.

Prices.—The prices remain almost stationary with however a tendency to rise.

C. J. PEARSE,
Dy. Commissioner.

Kadur District.

Rain-fall.—The following table shews the rain-fall at the head-quarters of taluks and the surrounding coffee estates during the month :—

Taluks.	I.	C.	*Estates.*	I.	C.
Chikmagalur ..	8	78	Santaveri	7	97
Tarikere ..	6	37	Balur	5	67
Lakvalli . ..	5	5	Alikan	7	85
Koppa	8	3¾	Nemar	8	61
Banavar.. ..	8	5	Mailimane	8	62
Múdgere ..	9	80	Koldhitlu	12	20
Kadur of the Banavar Taluk	11	1¼	Basgod	9	62
			Karehadlu	11	23

Thermometer.—The average readings of the thermometer recorded in the Meteorological Register at the Civil Dispensary at Chikmagalur were as shewn below :—

	9—30 A. M.	3—30 P. M.		9—30 A. M.	3—30 P. M.		9—30 A. M.	3—30 P. M.
September 1880	72·30	71·56	October 1880	74·93	75·38	October 1879	76·06	72·22.

Seeds sown—Bengal-gram in some parts of the Tarikere Taluk ; and sugar-cane and horse-gram in the Chikmagalur Taluk.

Crops.—good.

Crops harvested.—Wheat, coarse paddy, black and green-grams in the Tarikere Taluk; arecanut in the Lakvalli Taluk; arecanut and cardamom in the Koppa Taluk; and hutchellu and gid ragi in the Chikmagalur Taluk.

Coffee prospects.—Good.

Health.—Intermittent fever prevailed to some extent in the Banavar Taluk.

Live-stock.—Hoof and mouth disease and murrain (dodroga) prevailed generally throughout the District. The loss of cattle from all causes was 1,424 in this month, against 1,670 in the previous one, and 582 in October 1879.

Land.—Land assessed at Rs. 773—4—0 was newly taken up for cultivation.

Prices.—Stationary.

Extraordinary.—The wife of a Kurbar of Chikbuksagar, Banavar Taluk, gave birth to 3 children, all girls, on the 13th October. Mother and children are doing well.

K. MAHAMED ALI,
For Offg. Dy. Commissioner.

Chitaldroog District.

Weather.—The weather was close during the early part of the month.

There has been a remarkable increase in the fall of rain in all the taluks except Pavagada compared with the corres ponding months of 1878 and 1879; a comparative statement is attached:—

Taluks.	Rain-fall during— October 1878.		October 1879.		October 1880.	
Chitaldroog	1	40	1	19½	12	62½
Davangere	4	25	0	30	11	0
Kankuppa	0	70	3	5	10	30
Dodéri	5	80	0	40	11	19
Hiriyur	2	85	1	15	10	57½
Budihal	4	70	3	25	9	20
Hosdurga	2	15	1	55	9	65
Pavagada	12	70	4	20	6	20

The average reading of the thermometer at the District head-quarters was 74·19 at 9-30 A. M. and 77·22 at 3-30 P. M.

Crops.—The state of the crops in all the taluks are reported to be in good condition except in few places of the Kankuppa Taluk where the javari crops are reported to be partially injured from excessive rain. The seeds sown were while javari, wheat, chenna, cotton, navane, paddy, horse-gram, and gingelly, while the crops harvested were ragi, javari, wheat, navane and sáme.

Land.—Lands paying an assessment of Rs. 547—8—0 were newly taken up for cultivation.

Health.—The health of the population was generally good.

Cattle.—No epidemic disease prevailed among cattle.

Prices.—The markets were fairly supplied with food grain, and the average prices were as follows:—

Per rupee.	Per rupee.	Per rupee.
Rice 12 to 13 seers.	Ragi 40 to 48 seers.	Javari 40 seers.

ABDUL KHADER, K. B.,
Dy. Commissioner.

NOTICE.

200 *Rs. Reward.*

A reward of Rs. 200 is offered to any person, for such information as may lead to the detection and conviction of the person or persons concerned in the theft of Rs. 1,875—10—4 from the cash chest of the Imperial Post Office on the night of the 4th September 1880.

E. HEWETSON,
District Supt. of Police,
Town & Cantt. of Bangalore.

INAM DEPARTMENT.

NOTIFICATION.

No. 9. *The* 29*th November* 1880.

Kayamguttadars are hereby informed that 183 kayamgutta title-deeds for kayamgutta villages, situated in the marginally noted taluks, were forwarded through the Deputy Commissioners of the Bangalore, Kolar, Túmkúr, Chitaldroog, and Shimoga Districts, on the 29th November 1880, for distribution. They are accordingly to appear to receive the same, on receipt of individual notices from the Amildars of the aforesaid taluks, who are hereby instructed to issue such notices without delay.

1. Anekal.
2. Kolar.
3. Betmangala.
4. Shrinivaspur.
5. Goribidnur.
6. Gumnayakanpalya.
7. Mulbagal.
8. Chikballapur.
9. Sidlaghatta.
10. Malur.
11. Gudibanda.
12. Kunigal
13. Maddagiri.
14. Koratigere.
15. Túmkúr.
16. Hiriyur.
17. Bodéri.
18. Davangere.
19. Honnali.

R. A. COLE,
Supt. of Inam Settlements.

FINANCIAL DEPARTMENT.

ISSUE OF BRITISH COPPER COINS FROM TREASURIES.

Circular No. 1488, *dated* 3*rd December* 1880.

Under orders of the Government of India the Comptroller has the honor to intimate to all District and Taluk Treasury Officers that the circular instructions of this Office No. 4471 of May 1880 are withdrawn and cancelled.

Instead of paying a fixed percentage of the amount of Public Works cheques and Civil, Military, Local Fund and other establishment bills in British copper as directed in that circular, the Treasuries will issue such an amount of British copper as may be asked for in payment of such demands.

District Treasury Officers are further requested to ascertain and report to this Office the rate at which British copper are to be had in the bazars at the kasba of each taluk. The Amildars should send their reports at once to the District Treasury. This information is urgently wanted for communication to the Government of India.

H. HUDSON,
Comptroller.

ANCHE DEPARTMENT.

NOTIFICATION.

No. 818—535. *The* 3*rd December* 1880.

It is hereby notified for general information that under the authority of the Chief Commissioner of Mysore, an experimental Anche line from Vastara to Koppa has been opened and Anche Offices established at the following places on the line :—

Aldur (Múdgere Taluk.) | Balehonnur (Chikmagalur Taluk.) | Sulebail (Koppá Taluk.)

B. MURRY GUNGIAH,
Anche Bakshi.

Deaths registered in the Town and Cantonment of Bangalore for the Week ending 5th November 1880.

Estimated Population. { Males .. 72,236; Females .. 70,277 } Total.... 142,513

Diseases.	M.	F.	Total.
Cholera ...	...	...	...
Small-pox ...	...	...	...
Fevers ...	6	6	12
Bowel-complaints ...	2	2	4
Suicide ...	...	...	...
Wounding ...	...	...	...
Accident ...	...	...	...
Snake-bite or killed by wild beasts.	...	...	...
All other causes ...	8	8	16
Total.....	16	16	32
Births during the week ...	26	29	55

Deaths registered in the Town of Mysore for the Week ending 5th November 1880.

Estimated Population. { Males .. 29,081; Females .. 28,734 } Total.... 57,815

Diseases.	M.	F.	Total.
Cholera ...	...	...	...
Small-pox ...	...	...	...
Fevers ...	5	9	14
Bowel-complaints ...	3	5	8
Suicide ...	1	...	1
Wounding ...	...	...	...
Accident ...	...	...	...
Snake-bite or killed by wild beasts.	...	...	...
All other causes ...	...	1	1
Total.....	9	15	24
Births during the week ...	5	6	11

Deaths registered in the Town and Cantonment of Bangalore for the Week ending 12th November 1880.

Estimated Population. { Males. .. 72,236; Females.. 70,277 } Total.... 142,513

Diseases.	M.	F.	Total.
Cholera...	...	...	...
Small-pox ...	...	...	...
Fevers...	9	8	17
Bowel-complaints ...	8	1	9
Suicide...	...	...	...
Wounding ...	...	...	...
Accident ...	...	...	...
Snake-bite or killed by wild beasts.	...	...	...
All other causes ...	7	14	21
Total.....	24	23	47
Births during the week ...	35	27	62

Deaths registered in the Town of Mysore for the Week ending 12th November 1880.

Estimated Population. { Males .. 29,081; Females .. 28,734 } Total.... 57,815

Diseases.	M.	F.	Total.
Cholera ...	...	...	...
Small-pox ...	..	..	...
Fevers ...	3	3	6
Bowel-complaints ..	3	2	5
Suicide ...	...	...	...
Wounding ...	...	...	...
Accident ...	...	...	...
Snake-bite or killed by wild beasts	...	...	...
All other causes ...	...	...	...
Total.....	6	5	11
Births during the week ...	6	7	13

29th *November* 1880.

J. HOUSTON, M. D.,
Surgeon to the Mysore Commn

Abstract of Meteorological Reports received from Head-Quarters of Districts in the Province of Mysore, from 1st to 15th November 1880.

DISTRICT.	Thermometer. Averages for the haf month. 9-30 A. M. Dry bulb.	Wet bulb.	Difference.	3-30 P. M. Dry bulb.	Wet bulb.	Difference.	Thermometer. Maximum.	Minimum.	Rain. Inches.	Cents.	Wind.
Kolar	74	...	...	75	...	...	77	68	...	69	N. E.
Túmkúr ...	76	66	10	77	67	10	86	63	1	4	N. E.
Mysore*... ...	...	...	...	...	...	...	...	...	...	...	...
Hassan	64	32	32	74	37	37	80	63	...	95	S. W.& N. E.
Shimoga ...	76	...	...	78	...	...	...	...	...	60	N. E.
Kadur ...	73	74	1	70	67	3	77	56	1	96	N. E. & S. E.
Chitaldroog ...	73	...	...	75	...	...	...	...	...	62	...

*Information not received.

JUST PUBLISHED.

Super-royal, octavo, cloth.

Tribes of the Hindoo Koosh. *Price Rs.* 6 ; *packing and postage*, 6 *annas.*

Office of Superintendent of Government Printing, 8, Hastings Street, Calcutta.

Select Extra-Tropical Plants readily eligible for industrial culture or naturalization, with indications of their native countries and some of their uses, by Baron Ferd. Von Mueller. Indian edition, 1880. *Price Rs.* 4 ; *Packing and postage* 6 *annas.*

Office of Superintendent of Government Printing, 8, Hastings Street, Calcutta.

GOVERNMENT CINCHONA FEBBIFUGE.

This preparation is an efficient substitute for Quinine and can be purchased by Government officers, for public and charitable purposes, and by any one taking *twenty pounds* at a time, from the Superintendent, Botanical Garden, Calcutta, *for cash only*, at the following rates :—per four ounce tin *Rs.* 4, *ans.* 8 ; per eight ounce tin *Rs.* 8, *ans.* 8 ; per pound tin *Rs.* 16, *ans.* 8. The general public can be supplied by the Superintendent, Botanical Garden, *for cash only*, at the undernoted rates :—per four ounce tin *Rs.* 5, *ans.* 8 ; per eight ounce tin *Rs.* 10 *ans.* 8 ; per pound tin *Rs.* 20. This medicine is also sold by the principal European and Native druggists in Calcutta. Postage eight annas per 4 and 8 oz. tins and twelve annas per pound tin, in addition to the foregoing rates.

THE

MYSORE GAZETTE.

Published by Authority.

BANGALORE, SATURDAY, DECEMBER 11, 1880.

Separate paging is given to this Part in order that it may be filed as a separate compilation.

PART II.

Notifications by the Judicial Commissioner, &c.

JUDICIAL DEPARTMENT.

NOTIFICATIONS.

The 3rd December 1880.

With the approval of the Chief Commissioner the following list of Court holidays for the year 1881 has been prepared by the Judicial Commissioner and is hereby published for information.

These days shall accordingly be observed as close holidays by all Civil Courts throughout the Province.

LIST OF HOLIDAYS.

January 1st to 4th, (both days inclusive) ..	Christmas holidays.
Do 12th and 13th ..	Pongal.
February 26th	Sivaratri.
March 2nd	Ash Wednesday.
Do 5th	His Highness the Maha Raja's Birthday.
Do 15th	Holi Feast.
Do 30th	Gentu New Year's Day.
April 7th	Sriramanavami.
Do 14th to 19th, (both days inclusive) ..	Easter holidays.
Do 20th to 31st May, (both days inclusive) ..	Annual Recess of six weeks.
August 9th	Sravani.
Do 27th	Gauri
September 7th	Ananta Chaturdasi.
Do 23rd	Mahalaya Amavasye.
Do 24th	Commencement of Dasara.
October 1st	Mahanavami.
Do 22nd	Dipavali.
Do 24th	Balipadyami.
November 9th	Prince of Wales' Birthday.
December 24th to 31st, (both days inclusive) ..	Christmas holidays.

All Sundays in the year.

N. B.—The Empress' Birthday 24th May, Ascension day 26th May, Ganesa 28th August and Vijaya Desami 2nd October, are not entered, as the two former occur during the Annual Recess and the two latter on Sundays.

The 4th December 1880.

Notice is hereby given that the executors or administrators who have obtained probates or letters of administration in the matter of the estates mentioned below are hereby required under Section 277 of the Indian Succession Act, to exhibit in this Court, on or before the 18th January 1881, inventories and accounts of the said estates :—

Name of the Estate.	*Name of the Executor or Administrator.*	*Date of Grant.*
In the matter of the estate of Major-General Lousada Barrow.	John Alexander Boyson of the Firm of Messrs. Binny & Co., Madras.	11th June 1878.
Do Herbert Powys Drummond	Do do do	Do
Do Walter Green Aspinall.	Charlotte Ellen Aspinall Richard Hartwell James Charles McPherson Grant.	15th May 1880.
Do Arthur Hall.	Edward Hall of Anebadi Khari Estate in the Kadur District.	1st June 1880.

J. D. SANDFORD,
Judicial Commissioner.

POLICE DEPARTMENT.

NOTIFICATION.

The 7th December 1880.

A reward of Rs. 200 is offered for any information that will lead to the apprehension and conviction of the person or persons concerned in the robbery of the Imperial Mail committed near the 141st Milestone and the village of Suntikoppa on the Mercara-Mysore Road on the night of the 27th November 1880.

By Order

S. H. VARDON,
For Secretary.

INAM DEPARTMENT.

NOTIFICATIONS.

No. 9. *The 29th November* 1880.

Kayamguttadars are hereby informed that 183 kayamgutta title deeds for kayamgutta villages situated in the marginally noted taluks, were forwarded through the Deputy Commissioners of the Bangalore, Kolar, Túmkúr, Chitaldroog, and Shimoga Districts, on the 29th November 1880, for distribution. They are accordingly to appear to receive the same on receipt of individual notices from the Amildars of the aforesaid taluks, who are hereby instructed to issue such notices without delay.

1. Anekal.
2. Kolar.
3. Betmangala.
4. Shrinivaspur.
5. Goribidnur.
6. Gummayakanpalya.
7. Mulbagal.
8. Chikball pur.
9. Sidlaghatta.
10. Malur.
11. Gudibanda.
12. Kunigal
13. Maddagiri.
14. Koratagere.
15. Túmkúr.
16. Hiriyur.
17. Dodéri.
18. Davangere.
19. Honnali.

No. 10. *The 7th December* 1880.

Inamdars are hereby informed that 10 *ad-interim* certificates for whole villages and 475 *ad-interim* extracts for minor inams situated in the marginally noted taluks, were forwarded to the Deputy Commissioners of the Bangalore, Kolar, Hassan, Shimoga and Kadur Districts, on the 7th December 1880, for distribution.

They are accordingly to appear to receive the same on receipt of individual notices from the Amildars of the aforesaid taluks, who are hereby instructed to issue such notices without delay.

Bangalore.
Hoskote.
Dodballapur.
Nelamangala.
Closepet.
Anekal.
Betmangala.
Shrinivaspur.
Mulbagal.
Gudibanda.
Sidlaghatta.
Goribidnur.
Hassan.
Arkalgúd.
Attikuppa.
Kolar.
Chennaraypatna.
Narsipur.
Shimoga.
Sorab.
Múdgere.

R. A. COLE,
Supt. of Inam Settlements.

FINANCIAL DEPARTMENT.

COUNTERFEIT SILVER COINS.

Circular No. 1489, *dated 7th December* 1880.

District and Taluk Treasury Officers are reminded that agreeably to standing orders their returns of counterfeit silver coins cut or broken for the 12 months ending 31st December current, should be submitted to this Office early in January 1881 in the usual form.

The returns of the taluks should be embodied as hitherto in those of the respective District Treasuries.

H. HUDSON,
Comptroller.

MEDICAL DEPARTMENT.

Deaths registered from different Causes in the Provinces of Mysore and Coorg during the month of July 1880.

Division.	NAME OF DISTRICT.	Population according to Census of 1871.			Total Deaths from all Causes.			Ratio of Deaths per cent of Population from all Causes.			Number of Births registered.		
		Males.	Females.	Total.	M.	F.	Total.	M.	F.	Total.	M.	F.	Total.
Nuddydroog.	Bangalore District... ...	414,543	413,811	828,354	543	534	1,077	·13	·13	·13	772	737	1,509
	Kolar do	309,685	309,269	618,954	301	292	593	·10	·10	·10	440	383	823
	Túmkúr do	315,440	316,799	632,239	353	334	687	·11	·11	·11	355	342	697
	Total of the Division...	1,039,668	1,039,879	2,079,547	1,197	1,160	2,357	·11	·11	·11	1,567	1,462	3,029
Ashtagram.	Mysore District	467,562	475,625	943,187	823	709	1,532	·17	·15	·16	844	833	1,677
	Hassan do	313,683	326,194	639,877	430	330	760	·14	·10	·12	394	397	791
	Total of the Division...	731,245	801,819	1,583,064	1,253	1,039	2,292	·17	·13	·14	1,238	1,230	2,468
Nagar.	Shimoga District	258,446	240,530	498,976	430	418	848	·17	·17	·17	752	736	1,488
	Kadur do	184,978	177,487	362,465	287	278	565	·16	·16	·16	279	311	590
	Chitaldroog do	271,587	259,773	531,360	370	323	693	·14	·12	·13	514	459	973
	Total of the Division...	715,011	677,790	1,392,801	1,087	1,019	2,106	·15	·15	·15	1,545	1,506	3,051
	Total of the Province...	2,535,924	2,519,488	5,055,412	3,537	3,218	6,755	·14	·13	·13	4,350	4,198	8,548
	Coorg... ...	94,454	73,858	168,312	229	205	434	·24	·28	·26	115	89	204

J. HOUSTON, M. D.,
Surgeon to the Mysore Commission.

ANCHE DEPARTMENT.

NOTIFICATION.

No. 818—535. *The 3rd December* 1880.

It is hereby notified for general information that under the authority of the Chief Commissioner of Mysore, an experimental Anche line from Vastara to Koppa has been opened and Anche Offices established at the following places on the line :—

Aldur (Múdgere Taluk.) | Balehonnur (Chikmagalur Taluk.) | Sulebail (Koppa Taluk.)

B. MURRY GUNGIAH,
Anche Bakshi.

BANGALORE

BUDGET

Approximate Estimate of Receipts and Expenditure of

RECEIPTS.	Actuals of past year, 1879–80.	Actuals of first six months of current and previous year. 1880–81.	1879–80.	Estimate, 1881–82.	Percentage of estimated income of each major head on total estimated income.
1	2	3	4	5	6
I.—Octroi ... Class I.—Articles of food or drink for men or animals ...	1,099 4 5	1,666 15 6	...	3,000 0 0	...
II.—Animals for slaughter ...	...	...	...	...	...
III.—Fuel, lighting and washing..	...	...	...	...	...
IV.—Building materials ...	58 15 0	82 12 3	25 13 3	150 0 0	..
V.—Drugs, spices, and gums ...	...	...	...	...	...
VI.—Tobacco, betel, &c. ...	19,990 1 8	9,111 6 11	10,463 12 6	18,300 0 0	...
VII.—Cloth	...	...	...	...	...
VIII.—Metals	...	...	...	...	...
Total of Octroi.....	21,148 4 5	10,927 13 4	10,489 9 9	21,450 0 0	...
II.—Tax on houses, buildings or lands	10,216 11 6	3,736 7 5	5,550 3 1	14,500 0 0	...
III—Tax on professions and trades	20,917 0 0	7,121 7 6	6,643 14 9	19,856 0 0	...
IV.—Tax on carriages, horses, &c.	...	...	...	...	...
V.—Tolls on carts, carriages, &c.	...	...	...	...	...
VI.—Special taxes under Section XI, Act VI of 1868. 1.—Conservancy	...	...	...	...	...
... ...	...	...	...	...	...
... ...	...	...	...	...	...
... ...	...	...	...	...	...
Total of VI.....	...	...	...	...	...
VII.—Rents ... 1.—Nazul lands	102 8 0	20 0 0	22 8 0	150 0 0	...
2.—Ditto shops ...	2,107 7 5	1,257 12 4	1,057 3 5	3,140 0 0	...
3.—Serais	...	...	...	...	...
4.—Confiscated lands	...	...	...	...	...
5.—Compound or site tax ...	...	...	...	...	...
Total of VII.....	2,209 15 5	1,277 12 4	1,079 11 5	3,290 0 0	...
VIII.—Garden	84 3 0	...	...	50 0 0	...
IX.—Extraordinary 1.—Sales of houses and lands ...	4,980 4 2	...	...	150 0 0	...
2.—Loans	...	...	...	...	...
3.—Refunds and recoveries ...	82 0 3	1 9 0	55 0 3	500 0 0	...
4.—Interest on securities and loans ...	...	...	...	...	...
5.—Other items	167 0 0	124 8 0	139 4 0	150 0 0	...
Total of IX.....	5,229 4 5	126 1 0	194 4 3	800 0 0	...
X.—Fines	182 9 7	134 5 0	170 9 6	150 0 0	...
XI.—Pounds	232 15 3	151 12 7	187 10 0	300 0 0	.
XII.—Miscellaneous	1,405 10 6	1,433 10 0	615 8 3	2,600 0 0	...
XIII.—Transfer and Contributions	...	...	...	...	...
XIII.—Land Revenue	...	3,181 11 6	...	3,806 0 0	...
Total Annual Income	61,626 10 9	28,091 1 6	24,931 7 0	66,802 0 0	...
Balance of last year.....	5,523 12 1	...	...	6,245 0 0	...
Total Gross Income.....	67,150 0 0	28,091 1 6	24,931 7 0	73,047 0 0	...

MUNICIPALITY.

STATEMENT No. 1.
Municipal Funds for the year 1881—82.

EXPENDITURE.	Actuals of past year, 1879—80.	Actuals of first six months of current and previous year.		Estimate, 1881—82.	Percentage of estimated expenditure of each major head on total estimated expenditure.
		1880—81.	1879—80.		
1	2	3	4	5	6
I.—Collection: 1. For octroi tax ...	2,602 12 5	1,360 9 4	1,297 1 7	2,452	
2. For tax on houses, buildings and lands... / 3. For tax on professions and trades. ...	1,928 5 2	979 15 9	970 6 10	1,951	
4. For tax on carriages, horses, &c. ...	...	...	...	...	
5. For tolls on carts and other vehicles...	...	...	...	...	
6. Special taxes ...	...	...	...	...	
7. Rents assigned to Municipality ...	241 13 4	133 12 6	120 14 6	240	
Total of I...	4,772 14 11	2,474 5 7	2,388 6 11	4,640	
II.—Head Office Charges	4,963 13 1	2,466 13 3	2,476 4 1	5,140	
III.—Public Works... 1. Supervision	1,231 3 2	908 8 8	656 4 8	1,790	
2. a.—Original works ...	8,025 8 0	3,228 6 3	1,994 10 0	8,420	
b.—Purchase of land	...	...	...	...	
c.—Compensation for houses, &c. ...	1,997 0 0	151 0 0	41 5 6	2,000	
3. Repairs	5,559 11 9	3,165 11 1	2,928 9 8	5,000	
Total of III...	17,813 6 11	7,453 10 0	5,620 13 10	17,210	
IV.—Police	20,905 5 3	8,574 6 11	9,066 6 1	21,825	
V.—Education	...	...	...	...	
VI.—Charitable Grants... 1. Dispensary and Medical charges ...	...	...	...	...	
2. Vaccination	258 4 6	123 15 6	125 3 0	265	
3. Asylums ...	...	...	...	...	
4. Charitable Institution ...	...	...	...	1,900	
Total of VI...	258 4 6	123 15 6	125 3 0	2,165	
VII.—Conservancy	9,546 2 3	4,940 6 7	4,712 2 4	10,202	
VIII.—Road watering	100 1 0	30 0 0	26 5 0	100	
IX.—Lighting	2,522 9 5	1,093 11 0	1,416 7 0	3,000	
X.—Gardens. 1. Public Gardens	104 1 6	99 0 1	30 0 0	300	
2. Nursery	...	...	...	...	
3. Farm	...	...	...	...	
Total of X...	104 1 6	99 0 1	30 0 0	300	
XI.—Extraordinary 1. Museums and Institutes ...	...	...	...	...	
2. Purchase of Government Notes ...	...	...	...	...	
3. Other items	...	...	...	150	
Total of XI..	...	...	...	150	
XII.—Miscellaneous 1. Re-payment of loans	1,465 9 11	...	...	...	
2. Refund of excess collections ...	...	10 9 0	...	50	
3. Cattle-pound charges	102 9 11	117 13 5	75 8 0	270	
4. Statistics and mortuary registration ...	375 5 0	199 6 0	195 0 0	390	
5. Other miscellaneous items ...	1,703 5 6	798 12 8	1,031 11 9	1,400	
Total of XII...	3,646 13 6	1,126 9 1	1,302 4 6	2,110	
XIII.—Transfers	...	...	...	...	
Extraordinary Reserve	1,641 9 0	203 6 0	165 1 0	2,000	
Total of Expenditure... ...	66,275 1 4	28,586 4 10	27,329 5 9	68,845	
Balance at close of year... ...	875 5 6	...	...	4,202	
Grand Total.....	67,150 6 10	28,586 4 10	27,329 5 9	73,047	

BUDGET STATEMENT No. II.

Statement of Original Works proposed to be constructed from Municipal Funds during the year 1881—82.

1	2	3	4	5	6
No.	Nature of Work.	Amount of Estimate.	Computed Expenditure up to 31st March 1882.	Proposed to be spent from 1st April to 31st March.	REMARKS.
	No. I Division.	Rs.	Rs.	Rs.	
1	Gravelling the bund of Dharmambudhi Tank... ...	820 0 0	820 0 0	820 0 0	
2	Constructing V Drain in No. 1 Division	1,000 0 0	1,000 0 0	1,000 0 0	
3	Dismantling Box Drain and substituting a V Section drain in lieu of it, using the same materials in No. I Division ...	250 0 0	250 0 0	250 0 0	
	No. II Division.				
4	Constructing V Drain in No. II Division	1,000 0 0	1,000 0 0	1,000 0 0	
5	Roofing the Old clock tower in Vegetable Market ...	300 0 0	300 0 0	300 0 0	
6	Do in Mundies in do.	690 0 0	690 0 0	690 0 0	
7	Erecting a wall round grazing grounds Barr Line, ...	300 0 0	300 0 0	300 0 0	
8	Metalling and gravelling Targupettah Main road ...	655 0 0	655 0 0	655 0 0	
9	Do do Metcal lane	470 0 0	470 0 0	470 0 0	
	No. III Division.				
10	Constructing V Drain in No. III Division	500 0 0	500 0 0	500 0 0	
11	Do do in Cubbonpettah, 7th Lane ...	225 0 0	225 0 0	225 0 0	
12	Do do 9th Lane ...	230 0 0	230 0 0	230 0 0	
	No. IV Division.				
13	Widening Box Drain along Nagartapettah Main road from Maramma's temple to Kama Temple	1,140 0 0	1,140 0 0	1,140 0 0	
	No. V Division.				
14	Constructing V Drain in No. V Division	700 0 0	700 0 0	700 0 0	
15	Erecting dust bins in Mavalli...	140 0 0	140 0 0	140 0 0	
	Total Rs.....	8,420 0 0	8,420 0 0	8,420 0 0	

The 7th December 1880.

Memo of propositions to be laid before the next meeting of the Town Municipal Commission, to be held at their Office Premises, Bangalore Taluk Cutcherry, on Saturday the 18th December 1880, at 7½ A. M.

1. The usual monthly accounts and mortuary return for the month of November 1880.
2. Adoption of Budget Estimates of receipts and disbursements for the official year 1881—82.
3. Application for gratuity from Peon Sakoji of the Town Municipality.

No. 2985. *The 8th December* 1880.

Memo of propositions to be laid before the Ordinary Meeting of the Cantonment Municipal Commission, to be held at their Office Premises No. 12, Residency Road, on Friday the 17th December 1880, at 7½ A. M.

1. The usual monthly accounts for the month of November 1880.
2. Remission and exemption of house-tax.
3. List of agreements entered into by the President during the month of November 1880.
4. List of estimates sanctioned by the President during the month of November 1880.
5. Application in *forma pauperis* "from Abdulla Saib, a blind man," for exemption of house assessment.
6. Application from Mr. Nizamuddin Saib for a plot of ground in Broadway Road,
7. Budget estimates of receipts and disbursements of the Cantonment Municipal Commission for the official year 1881—82.

J. H. ORR,
President, Town & Cantt. Muni. Commns.

NUNDYDROOG DIVISION.

NOTIFICATION.

The 7th December 1880.

Sessions for the Bangalore District will be held at Bangalore on Monday the 20th day of December 1880 and following days —

The cases mentioned below are posted for trial :—

Magisterial No.	Sessions No.	Names of Prisoners.	Name of the Committing Magistrate.	Sections charged under—	Date of Committal.
1327 of 1880.	40	Munivenkata.	Mr. E. Pereira, Sar Amin and 2nd Magistrate, Town and Cantonment.	380 and 75, I. P. C.	2nd December 1880.
1362 of 1880.	41	Jorambi *alias*, Hayathbi.	Do	Do	9th do.

The Magistrates above named are hereby directed to cause all parties connected with the above noted cases to be in attendance at Bangalore before the Sessions Court on Monday the 20th day of December 1880, at 11 A. M.

2. All cases committed prior to that date will be taken up for trial in addition to the above.

T. R. A. THUMBOO CHETTY,
District & Sessions Judge.

BANGALORE DISTRICT.

NOTIFICATION.

The 6th December 1880.

P. Sitaramaiya, Acting Amildar and 3rd Class Magistrate, Nelamangala Taluk, is invested with the additional powers referred to in clause (*b*) of Section 23 of the Code of Criminal Procedure :—

(1) Power to hold inquests, (Section 135).

(2) Power to entertain complaints of offences in cases in which he has jurisdiction to try, (Section 141).

(3) Power to issue order to prevent obstruction, &c., (Section 518).

L. RICKETTS,
District Magistrate.

TUMKUR DISTRICT.

The 7th December 1880

NOTICE UNDER SECTION 354 OF THE CODE OF CIVIL PROCEDURE.

It is hereby declared that the undermentioned person is an insolvent and as such entitled to the benefit of the provisions of Chapter XX of the Code of Civil Procedure, and it is ordered that the said insolvent be and is hereby discharged from custody and from all liability to be arrested or imprisoned in respect of any of the debts mentioned in the schedule filed with records of the case concerned.

Sakoji Rao. .. In Insolvent Case No. 13 of 1880.

F. CHITAMBRAM IYER, *Sub-Judge.*

MYSORE DISTRICT.

The 23rd November 1880.

NOTICE UNDER SECTION 354 OF THE CODE OF CIVIL PROCEDURE.

It is hereby declared that the undermentioned person is an insolvent and as such entitled to the benefit of the provisions of Chapter XX of the Code of Civil Procedure, and it is ordered that the said insolvent be and is hereby discharged from custody and from all liability to be arrested or imprisoned in respect of any of the debts mentioned in the schedule filed with the records of the case.

Nanja Shetti .. .. In Insolvent Case No. 15 of 1880.

T. NARAHARI RAO, *Sub-Judge.*

COORG.
NOTIFI-
The 11th

Notice is hereby given for general information that the Government dues on the undermentioned
Superintendent's Office at Mercara at noon on Monday the 20th December 1880,

No.	Title-deed No.	Name of Defaulter.	Name of Estate.	Village, Nad and Taluk.	Area.	For 1876—77. Assessment.	Difference of Assessment.	Survey Charges.	Total.
			Kiggatnad Taluk.						
2484	...	Kerianidira Subbaiya.	Malakekadu ...	Poradu in Anjigerinad.	9·55	...	...	...	...
115	107	Bittiyanda Aiyappa.	Narakadumalé ...	Rudraguppe in Bettiyatnad.	157·21	...	...	...	...
2389	...	Kuppanda Subbaiya...	Najakolli ...	Do do	42·24	...	...	...	...
124	112	Do Chinnappa...	Kattekadu ...	Do do	48·53 Grass. 6·16 42·37	...	...	...	...
793	316	Koluvandra Iyappa ...	Bembukadu ...	Nokya do ...	158·07	...	...	...	...
2275	...	Kanjitanda Kariyappa.	Angarekadu ...	Badaga do ...	9·53 Grass. 1·6 8·47	...	...	...	...
2279	...	Do do ...	Todiyamottepaisari.	Do do ...	0·14	...	...	...	...
4352	...	Bettakurubara Gottugara Kala.	Gorikadu or Kallumottepaisari.	Nemmale in Tavalgerimurnad.	8·81	...	...	...	...
			Nanjarajapatna Taluk.						
1174	361	Iymudiyana Medappa.	Batta kadu ...	Nidavattu in Gadinad.	15·29	...	...	...	...
			Yelsavirshime Taluk.						
522	...	Goldsmith Yellamma.	Kanremaradakadu ...	Masgada in Bilhada Hobli.	27·48	...	...	...	...
			Padinalknad Taluk.						
3347	...	Babbira Medappa ...	Balangadu ...	Kolagadallu in Bengunad.	2·51	...	...	...	...
4210	...	Sthanika Isvaraiya ...	Balangolli ...	Tannimani in Tavunad.	15·62	...	...	...	...
3220	...	Konkani Dassappa ...	Kodambarikekadu ...	Tavuru do	1·30	...	...	...	...
2894	...	G. Poreyana Kariyanna.	Molayatti Parambu...	Kadiyatturu in Kuyangerinad.	11·01	...	...	...	...
103	...	Br. Bijapura Rambayi.	Balliyakollitundu ...	Bettattur in Kuyangerinad.	256·38	...	...	...	...

CATIONS.

November 1880.

Coffee Estates in Coorg being still unpaid, they will be put up to public auction at the 2nd Assistant and sold to the highest bidders above the upset price of the outstandings.

For 1877—78.				For 1878—79.				For 1879—80.			
Assessment.	Difference of Assessment.	Survey Charges.	Total.	Assessment.	Difference of Assessment.	Survey Charges.	Total.	Assessment.	Difference of Assessment.	Survey Charges.	Total.
...	...	...	...	19 1 7	...	...	19 1 7	19 1 7	...	...	19 1 7
...	...	...	...	314 6 9	...	...	314 6 9	...	...	...	...
...	...	...	...	84 7 8	...	...	84 7 8	84 7 8	...	...	84 7 8
...	...	...	...	84 11 10	...	...	84 11 10	84 11 10	...	...	84 11 10
...	...	...	...	316 2 2	...	...	316 2 2	316 2 2	...	...	316 2 2
...	...	...	...	16 15 0	...	...	16 15 0	...	...	...	...
...	...	...	...	0 14 1	...	...	0 14 1	...	...	...	...
...	...	...	...	...	19 6 6	...	19 6 6	...	...	...	...
13 9 4	...	...	13 9 4	30 9 4	...	...	30 9 4	30 9 4	...	...	30 9 4
23 13 4	...	...	23 13 4	54 15 4	...	...	54 15 4	54 15 4	...	...	54 15 4
...	...	...	...	5 0 4	16 1 4	...	21 1 8	...	...	...	...
...	...	...	...	...	...	...	...	31 3 10	...	...	31 3 10
...	...	...	...	2 9 7	...	...	2 9 7	...	...	...	...
...	...	...	...	...	...	...	...	22 0 4	...	...	22 0 4
...	...	...	...	...	...	...	...	512 12 2	...	...	512 12 2

No.	Title-deed No.	Name of Defaulter.	Name of Estate.	Village, Nad and Taluk.	Area.	Total. Assessment.	Total. Difference of Assessment.	Total. Survey Charges.	Total. Total.	Process Charges.	Grand Total.
				Kiggatnad Taluk.							
2484	...	Karianidira Subbaiya.	Malakekadu ...	Poradu in Anjigerinad.	9·55	38 3 2	...	...	38 3 2	4 4 6	42 7 8
115	107	Bittiyanda Aiyappa.	Narakadumalé ...	Rudraguppe in Battiyatnad.	157·21	314 6 9	...	...	314 6 9	4 4 6	318 11 3
2389	...	Kuppanda Subbaiya...	Najakolli ...	Do do	42·24	168 15 4	...	...	168 15 4	4 4 6	173 3 10
124	112	Do Chinnappa ...	Kattekadu ...	Do do	48·53 Grass. 6·16	169 7 8	...	...	169 7 8	4 4 6	173 12 2
					42·37						
793	316	Koluvandra Iyappa ...	Bembukadu ...	Nokya do	158·07	632 4 4	...	...	632 4 4	4 4 6	636 8 10
2275	...	Kanjitanda Kariyappa.	Angarekadu ...	Eadaga do	9·53 Grass. 1·6	16 15 0	...	...	16 15 0	4 4 6	21 3 6
					8·47						
2279	...	Do do ...	Todiyamotte paisari.	Do do	0·47	0 14 1	...	...	0 14 1	4 4 6	5 2 7
4352	...	Bettakurubara Gottugara Kola.	Gorikadu or Kallumotte paisari.	Nemmale in Tavalgerimurnad.	8·81	19 6 6	...	...	19 6 6	4 4 6	23 11 0
				Nanjarajapatna Taluk.							
1174	361	Iymudiyana Medappa.	Betta kadu ...	Nidavattu in Gadinad.	15·29	74 12 0	...	...	74 12 0	4 4 6	79 0 6
				Yelsavirshime Taluk.							
522	...	Goldsmith Yammale.	Kanremarada kadu ...	Masgada in Bilahada Hobli.	27·48	133 12 0	...	...	133 12 0	4 4 6	138 0 6
				Padinalknad Taluk.							
3347	...	Babbira Medappa ...	Balangadu ...	Kolagadallu in Benguinad.	2·51	5 0 4	16 1 4	...	21 1 8	4 4 6	25 6 2
4210	...	Sthanika Isvaraiya ...	Balengolli ...	Tannimani in Tavunad.	15·62	31 3 10	...	...	31 3 10	4 4 6	35 8 4
3220	...	Kankani Dasappa ...	Kodambarike kadu ...	Tevuru do ...	1·30	2 9 7	...	...	2 9 7	4 4 6	6 14 1
2894	...	G. Poreyana Kariyanna.	Molayatti parambu ...	Kadiyatturu in Kuyangerinad.	11·01	22 0 4	...	...	22 0 4	4 4 6	26 4 0
103	...	Br. Bijapura Rambayi.	Balliyakollitundu ...	Bettattur in Kuyangerinad.	256·38	512 12 2	...	...	512 12 2	4 4 6	517 0 8

Boundaries.			
North.	South.	East.	West.
Paisari land.	Paisari land and Cheriya Medri Iyappa's jamma land.	Paisari land.	No. 2485 Mallengala Ponnappa and Muddaiya's Malakekadu.
Mr. Rose's and Government jungle.	Ryots' jungle.	Ryots' bané.	Mr. Savaghe and Kariyamalle.
Sarkar paisari Nagakolli.	Sarkar paisari Nagakolli and Mr. Drummond's Nagakolli estate.	Mr. Drummonds Najakolli estate.	Sarkar paisari Nagakolli.
Grass bané and Ryots' bané.	B. Kariyappas.	Government jungle and Ryots' bané.	Clifton and grass bané.
Paisari jungle, Camping ground for troops, paisari land and grass land.	Paisari jungle.	Paisari jungle.	Paisari jungle.
No. 2280 Kongandra Biddaiya's Devarapalli estate.	Paisari Siripalimotte grass land and paisari kolli jungle.	Kangitandra Kariyappa's Tumbemadu jamma Kokaribelu warga and Aiyappadevara jungle.	Paisari Siripalimotte grass land and Sarkar perambu grass land.
Kangitandra Kariyappa's jahagir, Baliyatevawargada Peggu bané.	No. 2277 Malavandra Ganapati's Todiyamotte paisari coffee estate and Kangitandra Kariyappa's jahagir baliyatevawargada Peggu bané.	Kangitandra Kariyappa's jahagir baliyateva wargada Peggu bané.	No. 2277 Malavandra Ganapati's Todiyamotte paisari coffee estate and No. 2278 Malavandra Atchaiya's Todiyamotte paisari coffee estate.
Paisari forest.	Paisari forest.	Paisari forest.	Paisari forest.
Paisari.	Paisari.	Paisari.	Kariira Kuttaiya's jamma bané.
Sarkar paisari land.	Sarkar paisari land.	Sarkar paisari land.	Goldsmith Viranna and Sarkar paisari land.
Sarkar paisari grass land.	Kumbara Somusmotte bané kadu coffee and Devangada Aliya's bané kadu, Sarkar paisari grass land.	Bidandi Devaiya's mottebané kadu.	Sarkar paisari grass land.
Paisari Palakadu jungle.	Kedi Krishnaiya's Balangolli estate.	Palakadu paisari motte bané, Br. Rudraiya's gundikadu and Bellipadi Monna's jamma Pitlubali wargada Dodda bané.	Jevulebenda motte paisari bané and Paladaka Subbu's jamma, Bellipalina Kandakadu wargada Balangolli bané.
A. Kunna's Nadumateva wargada Kulukanti jamma bané.	Government paisari Kadambarike grass bané and K. Subbaiya's brother Krishnaiya's Kedambarike wargada sagu paddy field.	K. Subbaiya's brother Krishnaiya's Kodambarike wargada sagu paddy field.	A. Kunna's Nadumateva wargada Kulukanti jamma bané and Government paisari Kodimbarike grass bané.
Kenganda Senkra's Aditeva wargada Aramanedalada Molayatti parambu, 2nd bit jamma and Tore Akkamma's Pudiyatevada warga jamma Boyandane bané and Koppada Bellu's Malliteva wargada jamma mokki bané.	Maleyara Bellu's Molayetti parambu, Billavara Kariya's Molayetti parambu, Madivala Karimbu's Molayetti parambu and paisari kadu.	No. 2893 Pudiya Ammakka's Molayetti parambu paisari Chaliyanda Bellu's Molayetti parambu and paisari kadu.	Kenganda Senkra's Aditeva wargada Aramanedalada Molayetti parambu 2nd bit jamma.
Mr. Mann's jungle.	Grass hill.	Mr. D. Stewart's estate.	Mr. Stewart's jungle.

No.	Title-deed No.	Name of Defaulter.	Name of Estate.	Village, Nad and Taluk.	Area.	For 1876—77. Assessment.	Difference of Assessment.	Survey Charges.	Total.
			Padinalknad Taluk.						
4086	...	Chauri Ponnappa ...	Pallibakkadatundu ...	Bettatur in Kuyangerinad.	186·80 Devara kadu 39·93	...	...	...	...
					146·87				
3231	...	Washerman Subba ...	Joyiparekadu ...	Bettagéri do ...	3·98	...	...	...	...
			Mercara Taluk.						
1299	...	Nachabhat Janardanabhat	Kadubané ...	Kaggodlu in Kaggodlunad.	16·21	...	...	...	...
1301	...	Subramannya Jois ...	Koradakadu ...	Do do ...	15·40	...	...	...	...
2020	...	B. Mandappa ...	Bakkadabané ...	Biligeri do ...	51·71	103 6 10	...	...	103 6 10
488	...	Br. Subrao ...	Anekundadapaisari ...	Kaggodlu do ...	27·86	...	473 11 2	5 4 0	478 15 2
2260	...	Br. Subrao ...	Kayamkadu ...	Mekeri do ...	19·09	...	...	...	...
1685	365	Biddandra Boppanna.	Tombatamané ...	Hakatturu in do ...	82·53 Grass 3·83	...	234 3 0	...	234 3 0
					78·70				
1592	...	Mus. Jamal ...	Hosabanémottekadu.	Máde in do ...	1·42	...	...	...	...
80	...	Br. Krishnamachari.	Suttumotte ...	Mekeri in do ...	5·97	11 15 0	...	...	11 15 0
1833	...	Kuttatti Changappa.	Kungandri kadu ...	Kotageri in do ...	7·72	15 8 0	...	...	15 8 0
1410	...	G. Dasi... ...	Talemarada Athanikadu.	Do do ...	1·41	...	...	...	...

For 1877—78.				For 1878—79.				For 1879—80.			
Assessment.	Difference of Assessment.	Survey Charges.	Total.	Assessment.	Difference of Assessment.	Survey Charges.	Total.	Assessment.	Difference of Assessment.	Survey Charges.	Total.
...	...	...	...	...	...	...	...	249 2 7	...	...	249 2 7
...	...	...	...	...	...	...	...	7 2 4	...	...	7 2 4
32 7 5	...	...	32 7 5	32 7 5	...	...	32 7 5	32 7 5	...	...	32 7 5
...	...	...	...	18 12 10	...	...	18 12 10	30 12 10	...	...	30 12 10
103 6 10	...	...	103 6 10	103 6 10	...	...	103 6 10	103 6 10	...	...	103 6 10
...	...	...	...	55 11 8	...	...	55 11 8	55 11 8	...	...	55 11 8
38 2 11	217 1 6	3 9 0	258 13 5	38 2 11	...	...	38 2 11	38 2 11	...	...	8 2 11
...	...	...	...	...	...	...	...	157 6 5	...	...	157 6 5
...	...	...	...	2 13 4	...	...	2 13 4	2 13 4	...	...	2 13 4
...	...	...	...	11 15 0	...	...	11 15 0	11 15 0	...	...	11 15 0
...	...	...	...	15 8 0	...	...	15 8 0	15 8 0	...	...	15 8 0
...	...	...	...	2 13 0	...	...	2 13 0	2 13 0	...	...	2 13 1

No.	Title-deed No.	Name of Defaulter.	Name of Estate.	Village, Nad and Taluk.	Area.	Total. Assessment.	Total. Difference of Assessment.	Total. Survey Charges.	Total. Total.	Process Charges.	Grand Total.
			Padinalknad	*Taluk.*							
4086	...	Chauri Ponnappa ...	Pallibakkadatundu ...	Bettatur in Kuyangerinad.	186·80 Devara kadu. 39·93	249 2 7	...	...	249 2 7	4 4 6	253 7 1
					146·87						
3231	...	Washerman Subba ...	Joyipurekadu ...	Bettageri do	3·98	7 2 4	...	...	7 2 4	4 4 6	11 6 10
			Mercara	*Taluk.*							
1299	...	Nachabhat, Janardanabhat.	Kadubané ...	Kaggodlu in Kaggodlunad.	16·21	97 6 3	...	...	97 6 3	4 4 6	101 10 9
1301	...	Subramanyajois ...	Koradakadu ...	Do do	15·40	49 9 8	...	...	49 9 8	4 4 6	53 14 2
2020	...	B. Mandappa ...	Bakkadabané ...	Biligeri do	51·71	413 11 4	...	...	413 11 4	4 4 6	417 15 10
488	...	Br. Subrao ...	Anekundadapaisari ...	Kaggodlu do	27·86	111 7 4	473 11 2	5 4 0	590 6 6	4 4 6	594 11 0
2260	...	Br. Subrao ...	Kayamkadu ...	Mekeri do	19·09	114 8 9	217 1 6	3 9 0	335 3 3	4 4 6	339 7 9
1685	365	Biddandra Boppanna.	Tombattamané ...	Hakattura in do	82·53 Grass 3·83	157 6 5	234 3 0	...	391 9 5	4 4 6	395 13 11
					78·70						
1592	...	Mus. Jamal ...	Hosabanemottekadu.	Máde in do	1·42	5 10 8	...	...	5 10 8	4 4 6	9 15 2
80	...	Br. Krishnamachari,	Suttumotte ...	Mekeri in do	5·97	35 13 0	...	...	35 13 0	4 4 6	40 1 6
1833	...	Kuttatti Changappa.	Kungandrikadu ..	Kotageri in do	7·72	46 8 0	...	...	46 8 0	4 4 6	50 12 6
1410	...	G. Dasi ...	Talemarada Athanikadu.	Do do	1·41	5 10 0	...	...	5 10 0	4 4 6	9 4 6

N. *B.*—The purchaser will be subject to pay the assessment for the current year *viz.*, 1880—81, as well as

Conditions of Sale.—Para.—1. The highest bidder will be the purchaser subject to confirmation of sale, provided he deposit 25 per cent

2. The balance of the purchase money must be paid before noon of the 30th day from the date of sale, but

3. Should the purchaser fail to pay the balance of the purchase money within the time fixed, the sale will in the amount realized by the re-sale, and in the calculation of such deficiency the deposit that has by the re-sale.

4. Any amount due from a defaulting purchaser may be recoverd under the rules or practice in force

5. All sales and re-sales shall be subject to confirmation by the Superintendent of Coorg, who may order any by him. If within three months from the date of sale, the Superintendent shall not have reversed

6. In any case in which a sale or re-sale may be cancelled, the purchaser will receive back the money or

Boundaries.			
North.	South.	East.	West.
Somaga Saiya's Palli Bakkada tundu Yelada estate and Somaga Saiya's Palli Bakkada tundu Ilachi estate Sarkar paisari kadu.	Sarkar paisari kadu.	Mangandri Belliyappa's Chembadakolli tundu Yelada estate and Padamari Devara kadu and Mangandri Belliyappa's Chambada kolli tundu Yelada estate.	Padamari Devaratandimotte kadu and Captain Taylor and Company's Bunter coffee estate.
Kadle Medu's gundi teva warga paddy field Kadle Medu's Joyipare kadu paisari coffee.	Patel Ranganna's Balamanda warga jamma jungle.	Rachavalada Venkata's Joyipare kadu and Bantra Jattanna's Joyipare kadu.	Genge Subba's jamma Irana warga bané and Niyane Timmaiya's Tingala warga jamma jungle.
Horurnurokalnad Kodagadalu village Sarkar kadu bané.	Kagollunad, Kagodlu village, Sarkar kadubané.	Horurnurokalnad Kodagadalu village, Sarkar kadubané.	Kagodlunad, Kagodlu village, Sarkar kadu búmi.
Honna Kote Kunnappa's jammada Muttira wargada kadu bané and Brahman Govindaiya's Sagina Irumanda wargada Irumandane.	Teluru Ukkanna's jammada Kungirana warga da kadu bané boundary of Hakaturu village and Aramane kadang.	Br. Kukke Lingaiya's Sagin Boradira wargada Govinda bané and boundary of Hakaturu village and Aramane kadang.	Mandri Puttappa's jammada Podiva wargada kadu bané and Teluru Ukkanna's jammada Kungirana wargada kadu bané.
Masaligauda's Nayikuppa jammada grass land Korgi Akateva warga and Telugara Naranappa's sagina kadu bané grass land Chettirandabaliyateva warga.	Manichagauda's Karani bané jammada grass land Bettanda Baliyatevawarga and Iyappa Devara kadu.	Telugara Narnappa's sagina kadu bané grass land Chattiranda baliyatevawarga jungle Kokale baliya and Brahman Subbaiya's Totirane sagina teva warga.	Brahman Saraswati Krishnaiya's Muri bané sagina grass land Bettanda warga and Masaligauda's Nayikuppa jammada grass land Korji Akateva warga.
Sarkar paisari.	Sankrabhatta and Govindabhatta.	Kuruvanu Muttanna and Sarkar paisari.	Ramabhatta, Nacha bhatta and Janardana bhatta.
Kuttatti Iyappanna's Kullukulu estate and Major Martin's Kullu kulu estate and paisari kayam kadu motte grass hill.	Minachya's sagu Tirumudi wargada tota bané and Brahman Subramanya's kayam kadu estate.	Paisari kayam kadu motte grass hill and Brahman Subramannaiya's kayam kadu estate.	Kayam kadu paisari bané.
Bette Iyappa's Devara bané and Kenjeri kadu paisari.	Government paisari Tombattamane kadu.	Ammattanna Ponnappa's Kengeri kadu coffee estate and Government paisari Tombattamane kadu.	Mr. Drummond's Thombattamane coffee estate.
No. 1437 Krishnappa's Hosabané motte paisari coffee estate.	V. Muniyappa's Hosabané motte paisari mané hitlu and No. 1383 V. Muniyappa's Hosabané motte paisari coffee estate.	Road.	No. 1383 V. Muniyappa's Hosabané motte paisari coffee estate and No. 1585 Mus. Jaher Khan's Hosabané motte paisari coffee estate.
Syed Jamal's.	Road.	Jaffer Sait's.	Mahomed Husen's.
Maktum Saib.	Maktum Saib and Channabasappa's jamma jungle.	Maktum Saib.	Channabasappa's jamma jungle and Udiyandra Mandanna.
Devangada Kenchetti's sadlimarada Attani kadu coffee estate and No. 1409 Gauligara Subba's sadlemarada Attani kadu coffee estate.	Mus. Karim Saib's sagina Telapanada wargada Telapanada baliya bané.	No. 1409 Gauligara Subba's sadlemarada Attani kadu coffee estate.	Devangada Kenchetti's sadlemarada Attani kadu coffee estate.

survey and other charges that may become due.
of the purchase money immediately; should he fail to make such deposit the lot will be put up again.
if that day happens to be a Sunday or holiday the payment must be made before noon on the next office day.
be cancelled, the deposit will be forfeited and the land may be again put up to auction. The defaulting purchaser will be liable for any deficiency
been forfeited shall not be reckoned. The defaulting purchaser at the first sale shall moreover have no claim to any surplus that may be realized

for the recovery of arrears of land revenue.
sale or re-sale to be cancelled. The decision of the Superintendent is open to revision by the Chief Commissioner and may be modified or reversed
the sale or re-sale, the same shall be held to have been confirmed by him.
deposit paid by him, but will have no claims to interest or damages.

The 11th November 1880.

Notice is hereby given for general information that the arrears due on the undermentioned coffee estates in Coorg being still unpaid, they will be put up to public auction at the 2nd Assistant Superintendent's Office at Mercara, at noon on Monday the 20th December 1880, and sold to the highest bidder above the upset price.

Survey No.	Title-deed No.	Name of Defaulter.	Name of Estate.	Village, Nad and Taluk.	Area.	Boundaries. North.	South.	East.	West.	Assessment for 1879-80.			Costs and Charges.			Total.		
109	114	Mr. W. V. Drummond.	Lilford ...	Hakatur Village in Kaggodlunad of the Mercara Taluk.	113·93	Iyappa Davu ...	Government bane ...	B. Bopu's... ...	Government bane ...	227	13	8	4	4	6	232	2	2
729	131	Mrs. Annie Margaret Fowler.	Glen Moriston	Heggal in Yedenalknad of the Yedenalknad Taluk	282·81	Fowler estate 3rd part Government bane.	Fowler's jungle Bradford ...	Fowler's jungle and Rose's jungle.	Fowler's jungle ...	565	9	11	4	4	6	569	14	5

N. B.—The purchaser will be subject to pay the assessment for the current year, *viz.*, 1880—81.

Conditions of Sale.—Para.—1. The highest bidder will be the purchaser subject to confirmation of sale, provided he deposit 25 per cent of the purchase money immediately; should he fail to make such deposit the lot will be put up again.

2. The balance of the purchase money must be paid before noon of the 30th day from the date of sale, but if that day happens to be a Sunday or holiday the payment must be made before noon on the next office day.

3. Should the purchaser fail to pay the balance of the purchase money within the time fixed, the sale will be cancelled, the deposit will be forfeited and the land may be again put up to auction. The defaulting purchaser will be liable for any deficiency in the amount realized by the re-sale, and in the calculation of such deficiency the deposit that has been forfeited shall not be reckoned. The defaulting purchaser at the first sale shall moreover have no claim to any surplus that may be realized by the re-sale.

4. Any amount due from a defaulting purchaser may be recovered under the rules or practice in force for the recovery of arrears of land revenue.

5. All sales and re-sales shall be subject to confirmation by the Superintendent of Coorg, who may order any sale or re-sale to be cancelled. The decision of the Superintendent is open to revision by the Chief Commissioner and may be modified or reversed by him. If within three months from the date of sale, the Superintendent shall not have reversed the sale or re-sale, the same shall be held to have been confirmed by him.

6. In any case in which a sale or re-sale may be cancelled, the purchaser will receive back the money or deposit paid by him, but will have no claims to interest or damages.

H. G. THOMSON,
Superintendent.

Abstract of Meteorological Reports received from Head-Quarters of Districts in the Province of Mysore, from 16th to 30th November 1880.

DISTRICT.	Thermometer. Averages for the haf month. 9-30 A. M. Dry bulb.	Wet bulb.	Differ-ence.	3-30 P. M. Dry bulb.	Wet bulb.	Differ-ence.	Thermometer. Maximum.	Minimum.	Rain. Inches.	Cents.	Wind.
Kolar	72	...	...	73	...	...	74	65	4	35	N. E.
Túmkúr ...	75	66	9	76	67	9	87	65	2	21	N. E.
Mysore*... ...	...	...	...	...	...	...	...	...	...	...	...
Hassan	63	30	33	72	34	38	78	62	2	29	N. E. & E.
Shimoga ...	76	...	...	81	...	...	...	...	1	11	N. E.
Kadur ...	73	73	...	66	65	1	76	62	2	45	N. E. & S. W.
Chitaldroog ...	72	...	...	74	...	...	...	...	5	98	N. E.

*Information not received.

Visitors to the Mysore Government Museum, Bangalore, during the month of November 1880, *were* 25,441 *in number, averaging, exclusive of Sundays and holidays*, 1,060 *daily.*

SIGNATURES MADE IN— English. Europeans.	Natives.	Tamil.	Telugu.	Kanarese.	Hindustani.	Mahratta.	Guzaratti.	Nagari.	Malayalam.	Total of Signatures. Males.	Females.	Unable to sign but tally kept.	Total of Visitors.	Unable to sign No. of— Men and Boys.	Women and Girls.	Total of Visitors.
256	497	569	107	1,387	253	67	2	2	2	3,049	93	22,299	25,441	11,388	10,911	25,441

J. HOUSTON, M. D.,
Supt., Mysore Govt. Museum.

JUST PUBLISHED.
Super-royal, octavo, cloth.
Tribes of the Hindoo Koosh. *Price Rs.* 6 ; *packing and postage*, 6 *annas.*

Office of Superintendent of Government Printing, 8, Hastings Street, Calcutta.

Select Extra-Tropical Plants readily eligible for industrial culture or naturalization, with indications of their native countries and some of their uses, by Baron Ferd. Von Mueller. Indian edition, 1880. *Price Rs.* 4 ; *Packing and postage* 6 *annas.*

Office of Superintendent of Government Printing, 8, Hastings Street, Calcutta.

GOVERNMENT CINCHONA FEBRIFUGE.

This preparation is an efficient substitute for Quinine and can be purchased by Government officers, for public and charitable purposes, and by any one taking *twenty pounds* at a time, from the Superintendent, Botanical Garden, Calcutta, *for cash only*, at the following rates :—per four ounce tin *Rs.* 4, *ans.* 8 ; per eight ounce tin *Rs.* 8, *ans.* 8 ; per pound tin *Rs.* 16, *ans.* 8. The general public can be supplied by the Superintendent, Botanical Garden, *for cash only*, at the undernoted rates —per four ounce tin *Rs.* 5, *ans.* 8 ; per eight ounce tin *Rs.* 10 *ans.* 8 ; per pound tin *Rs.* 20. This medicine is also sold by the principal European and Native druggists in Calcutta. Postage eight annas per 4 and 8 oz. tins and twelve annas per pound tin, in addition to the foregoing rates.

BANGALORE

BUDGET

Approximate Estimate of Receipts and Expenditure

RECEIPTS.	Actuals of past year, 1879—80.	Actuals of first six months of current and previous year.		Estimate, 1881—82.	Percentage of estimated income of each major head on total estimated income.
		1880—81.	1879—80.		
1	2	3	4	5	6
I.—Octroi ... Class I.—Articles of food or drink for men or animals or duty on dry and green cocoanuts...	2,198 8 8	3,334 3 0	...	4,667	...
II.—Animals for slaughter ...	...	...	...	...	...
III.—Fuel, lighting and washing.	...	...	...	...	...
IV.—Building materials ...	629 5 6	219 12 0	421 15 6	600	...
V.—Drugs, spices, and gums ...	...	...	...	...	...
VI.—Tobacco	38,406 13 10	18,222 10 1	20,087 8 11	37,334	...
VII.—Cloth	...	...	...	...	...
VIII.—Metals	...	...	...	...	...
Total of Octroi.....	41,234 12 0	21,776 9 1	20,509 8 5	42,601	28·9
II.—Tax on houses, buildings or lands	33,023 1 0	26,387 4 5	16,236 3 10	32,000	21·7
III.—Tax on professions and trades	18,634 10 8	11,792 5 4	9,785 8 0	22,954	15·5
IV.—Tax on carriages, horses, &c.	...	...	...	3,000	2·0
V.—Tolls on carts, carriages, &c.	...	...	...	5,000	3·4
VI.—Special taxes under Section XI, Act VI of 1868. 1.—Conservancy	...	...	...	...	...
2.	...	...	...	...	
3.	...	...	...	...	...
4.	...	...	...	...	...
Total of VI...	...	...	...	...	...
VII.—Rents ... 1.—Nazul lands	935 2 0	587 7 7	596 9 0	880	...
2.—Ditto shops	5,484 12 4	2,700 13 2	2,711 4 4	5,350	...
3.—Serais	...	...	...	...	...
4.—Confiscated lands	...	...	...	...	...
5.—Compound or site tax ...	...	...	...	...	...
Total of VII.....	6,419 14 4	3,288 4 9	3,307 13 4	6,230	4·3
VIII.—Garden	...	...	...	...	...
IX.—Extraordinary, 1.—Sales of houses and lands ...	...	...	...	...	...
2.—Loans	...	...	...	...	...
3.—Refunds and recoveries ...	1,409 3 11	138 10 6	675 14 7	500	...
4.—Interest on securities and loans.	771 2 6	380 12 6	401 11 4	400	...
5.—Other items	...	...	...	...	...
Total of IX.....	2,180 6 5	519 7 0	1,077 9 11	900	0·6
X.—Fines	653 6 0	246 2 0	361 1 0	500	0·3
XI.—Pounds	901 0 4	436 3 0	594 2 0	800	0·5
XII.—Miscellaneous	6,704 2 3	4,230 2 4	3,580 8 3	8,070	5·5
XIII.—Transfers and contributions...	16,006 14 10	7,755 11 6	8,932 0 6	10,700	7·3
XIV.—Revenue on kandayam lands within Municipal limits.	..	3,181 11 7	...	4,000	2·0
Total Annual Income.....	1,25,758 3 10	79,613 13 0	64,274 7 3	1,36,755	92·0
Balance of last year	8,979 13 5	1,565 11 4	8,979 13 5	11,000	8·0
Total Gross Income	1,34,738 1 3	81,179 8 4	73,254 4 8	1,47,755	100·0

MUNICIPALITY.

STATEMENT I.

of Municipal Funds for the year 1881—82.

EXPENDITURE.	Actuals of past year, 1879—80.	Actuals of first six months of current and previous year. 1880—81	1879—80.	Estimate, 1881—82.	Percentage of estimated expenditure of each major head on total estimated expenditure.
1	2	3	4	5	6
I.—Collection: 1. For octroi tax	5,001 8 11	2,566 9 7	2,492 3 2	5,000	...
2. For tax on houses, buildings and lands	4,609 1 2	2,616 7 2	2,413 10 3	2,210	...
3. For tax on professions and trades ...	170 10 8	60 0 0	60 0 0	173	...
4. For tax on carriages, horses, &c. ...	...	...	...	...	...
5. For tolls on carts and other vehicles...	...	...	...	...	...
6. Special taxes	...	...	...	...	...
7. Rents assigned to Municipality ...	2,115 13 8	730 0 4	1,289 5 0	1,404	...
Total of I...	11,897 2 5	5,973 1 1	6,255 2 5	8,787	5·9
II.—Head Office Charges	8,955 12 10	4,469 8 3	4,522 14 4	3,308	2·2
III.—Public Works: 1. Supervision...	6,360 12 10	2,965 13 2	3,413 15 7	2,532	...
2. a.—Original works	14,631 0 1	7,313 14 2	6,858 14 10	18,295	...
b.—Purchase of land	63 0 0	334 8 0	63 0 0	500	...
c.—Compensation for houses, &c. ...	1,017 15 7	133 12 11	208 9 4	500	...
3. Repairs	31,761 3 1	14,457 14 3	16,982 11 8	32,950	...
Total of III...	53,833 15 7	25,265 14 6	27,527 3 5	54,777	37·0
IV.—Police	20,101 0 0	8,388 3 9	9,132 1 9	20,101	13·6
V.—Supervision and management...	...	...	..	—13,400	9·1
VI.—Charitable Grants: 1. Dispensary and Medical charges ...	1,000 0 0	...	...	2,000	...
2. Vaccination...	280 0 0	120 0 0	140 0 0	300	...
3. Asylums	...	...	...	..	...
Total of VI...	1,280 0 0	120 0 0	140 0 0	2,300	1·6
VII.—Conservancy	19,602 7 0	10,013 3 9	10,017 1 8	24,433	16·6
VIII.—Road watering	1,000 0 0	531 6 11	424 9 9	1,000	0·6
IX.—Lighting	7,991 7 3	3,952 8 10	3,839 7 5	9,500	6·5
X.—Gardens... 1. Public Gardens	...	...	...	...	...
2. Nursery	82 1 10	42 0 0	42 0 0	84	...
3. Farm	...	...	...	...	..
Total of X...	82 1 10	42 0 0	42 0 0	84	0·0
XI.—Extra-ordinary: 1. Museums and Institutes.. ...	...	...	...	...	...
2. Purchase of Government Notes ...	...	...	...	...	...
3. Fairs and Exhibitions	284 14 0	...	...	400	...
Total of XI...	284 14 0	...	...	400	0·3
XII.—Miscellaneous: 1. Re-payment of loans	...	...	...	...	...
2. Refund of excess collections ...	...	...	...	...	...
3. Cattle-pound charges	747 4 6	434 2 7	389 15 10	694	...
4. Statistics and mortuary registration...	1,122 2 0	540 0 0	571 0 0	1,130	...
5. Other miscellaneous items ...	3,799 8 10	1,748 2 2	2,042 12 0	4,332	...
Total of XII...	5,668 15 4	2,722 4 9	3,003 12 8	6,156	4·3
XIII.—Reserve	2,474 9 8	603 3 6	...	3,000	2·0
Total of Expenditure ...	1,33,172 5 11	62,071 7 4	64,904 5 5	1,47,246	99·7
Balance at close of year ...	1,565 11 4	19,108 1 0	8,349 15 3	509	0·3
Grand Total	1,34,738 1 3	81,179 8 4	73,254 4 8	1,47,755	100·3

BUDGET STATEMENT No. II.

Statement of Original Works proposed to be constructed from Municipal Funds during the year 1881—82.

1	2	3	4	5	
Division or Locality.	Nature of Work.	Amount of Estimate.	Computed Expenditure up to 31st March.	Proposed to be spent from 1st April to 31st March.	Remarks.
No. I Alsur Division.	Extension of D No. 3 street to Tarevidi street.	750		750	
	Construction of box drain for drainage of Kaliyammakoil street.	970		970	
	Construction of a foot bridge over waste-weir channel at Paini Modaliar's street.	70		70	
	Construction of beef stalls at Alsur ...	640		640	
	Construction of box drain at Doddikunta.	200		200	
No. II Chule Division.	Opening out roads in Yellegaudanapalyam.	1,000		1,000	
	Blasting rock in K. No. I street ...	50		50	
	Improving Palm grove road ...	200		200	
	Improvements at the Chule market ...	500		500	
No. III Arab Line and Richmond Town Dn.	Drainage of Kupsander	500		500	
No. IV General Bazar Division.	Terracing carcase room in the bullock slaughter house.	405		405	
	Formation of foot paths along the main road in Cleveland Town.	570		570	
	Opening up roads in Kumbarchule ..	1,100		1,100	
	Construction of box drain in Armstrong road.	280		280	
	Construction of box drain at road below Sappers lines.	155		155	
	Construction of box drain in Virapille street.	475		475	
	Construction of box drain in Jeweller's street.	270		270	
	Construction of box drain in old poor house road.	120		120	
	Construction of box drain behind slaughter house.	120		120	
	Construction of drains, Cavalry road ...	580		580	
	Opening road to Hindu cemetery at Mutakarpanpalya.	500		500	
	Conversion of open rice stalls in Broadway into closed bazars.	1,250		1,250	
	Construction of sheds at the Sultanjgunta bandy stand.	600		600	
No. V Blackpalli Division.	Opening up roads behind Roman Catholic church at Blackpalli.	2,900		2,900	
	Extension of Benson's cross road ...	175		175	
	Construction of silt dams at Dobbspet ...	200		200	
	Railings on race course road ...	540		540	
	General improvements	250		250	
Miscellaneous.	Construction of V section drains ...	2,925		2,925	
	Total.....	18,295		18,295	

J. H. ORR,
President, Cantt. Ml. Commn.

THE

MYSORE GAZETTE.

Published by Authority.

BANGALORE, SATURDAY, DECEMBER 18, 1880.

☞ Separate paging is given to this Part in order that it may be filed as a separate compilation.

PART II.

Notifications by the Judicial Commissioner, &c.

JUDICIAL DEPARTMENT.

NOTIFICATIONS.

The 4th December 1880.

Notice is hereby given that the executors or administrators who have obtained probates or letters of administration in the matter of the estates mentioned below are hereby required under Section 277 of the Indian Succession Act, to exhibit in this Court, on or before the 18th January 1881, inventories and accounts of the said estates :—

Name of the Estate.	*Name of the Executor or Administrator.*	*Date of Grant.*
In the matter of the estate of Major-General Lousada Barrow.	John Alexander Boyson of the Firm of Messrs. Binny & Co., Madras.	11th June 1878.
Do Herbert Powys Drummond	Do do do	Do
Do Walter Green Aspinall.	Charlotte Ellen Aspinall Richard Hartwell James Charles McPherson Grant.	15th May 1880.
Do Arthur Hall.	Edward Hall of Anebadi Khari Estate in the Kadur District.	1st June 1880.

The 7th December 1880.

The undermentioned gentleman has been enrolled as a 1st Grade Pleader in the Courts of Coorg, under the Rules of 23rd December 1879 :—

Mr. Mittha Rama Rao.

The 10th December 1880.

The undermentioned gentleman has been enrolled as an Advocate in the Court of the Judicial Commissioner of Mysore, under the Rules of 18th February 1879 :—

Mr. Uppala Dadiem Venkaiya.

The 13th December 1880.

The undermentioned persons have been enrolled as 2nd Grade Pleaders in the Courts of Coorg, under the Rules of 23rd December 1879 :—

10.	Harihalli Asvattha Naranaiya	.. In the Courts of the Parpattegars and Subedars in Coorg.	
13.	Kote Naganna	.. Do	do
14.	G. Singaiengar	.. Do	do
15.	Jainar M. Puttasamaiya	.. Do	do
16.	Kalale Raghavendra Rao	.. Do	do

J. D. SANDFORD,
Judicial Commissioner.

INAM DEPARTMENT.

NOTIFICATIONS.

No. 9. *The 29th November* 1880.

Kayamguttadars are hereby informed that 183 kayamgutta title-deeds for kayamgutta villages situated in the marginally noted taluks, were forwarded through the Deputy Commissioners of the Bangalore, Kolar, Túmkúr, Chitaldroog, and Shimoga Districts, on the 29th November 1880, for distribution. They are accordingly to appear to receive the same on receipt of individual notices from the Amildars of the aforesaid taluks, who are hereby instructed to issue such notices without delay.

1. Anekal.	11. Gudibanda.
2. Kolar.	12. Kunigal
3. Betmangala.	13. Maddagiri.
4. Shrinivaspur.	14. Koratagere.
5. Goribidnur.	15. Túmkúr.
6. Gumnayakanpalya.	16. Hiriyur.
7. Mulbagal.	17. Dodéri.
8. Chikballapur.	18. Davangere.
9. Sidlaghatta.	19. Honnali.
10. Malur.	

No. 10. *The 7th December* 1880.

Inamdars are hereby informed that 10 *ad-interim* certificates for whole villages and 475 *ad-interim* extracts for minor inams situated in the marginally noted taluks, were forwarded to the Deputy Commissioners of the Bangalore, Kolar, Hassan, Shimoga and Kadur Districts, on the 7th December 1880, for distribution.

They are accordingly to appear to receive the same on receipt of individual notices from the Amildars of the aforesaid taluks, who are hereby instructed to issue such notices without delay.

Bangalore.	Shrinivaspur.	Attikuppa.
Hoskote.	Mulbagal.	Belur.
Dodballapur.	Gudibanda.	Chennarayypatna.
Nelamangala.	Sidlaghatta.	Narsipur.
Closepet.	Goribidnur.	Shimoga.
Anekal.	Hassan.	Sorab.
Betmangala.	Arkalgúd.	Múdgere.

No. 11. *The 9th December* 1880.

Inamdars are hereby informed that 197 final title-deeds for whole inam villages and for minor inams situated in the marginally noted taluks, were forwarded to the Deputy Commissioners of the Bangalore, Túmkúr and Shimoga Districts on the 9th December 1880 for distribution.

They are accordingly to appear to receive the same on receipt of individual notices from the Amildars of the aforesaid taluks, who are hereby instructed to issue such notices without delay.

1. Bangalore.	5. Túmkúr.
2. Magadi.	6. Kunigal.
3. Nelamangala.	7. Maddagiri.
4. Closepet.	8. Shikarpur.

The *ad-interim* certificates issued already for the above inam villages and minor inams are hereby declared to be cancelled.

R. A. COLE,
Supt. of Inam Settlements.

FINANCIAL DEPARTMENT.

The 18th November 1880.

Statement of Local Cess realized and allotted to Local Funds from 1st April to 30th September 1880.

No. I.—Local Cess levied on Land Revenue Collections.

Districts.	One Anna Cess in Surveyed and Unsurveyed Taluks including arrears at half-anna on the latter.								
	Amount of Cess.			76 per cent allotted to District Funds.			24 per cent allotted to Village School Fund.		
Bangalore	6,332	5	4	4,812	9	2	1,519	12	2
Kolar	10,641	9	0	8,087	9	5	2,553	15	7
Túmkúr	14,338	10	9	10,897	6	3	3,441	4	6
Shimoga	3,428	4	6	2,605	7	11	822	12	7
Kadur	3,528	15	9	2,682	0	5	846	15	4
Chitaldroog	8,146	9	9	6,191	6	9	1,955	3	0
Mysore	10,781	8	10	8,193	15	8	2,587	9	2
Hassan	15,056	9	0	11,442	15	10	3,613	9	2
Total.....	72,254	8	11	54,913	7	5	17,341	1	6

No. II.—Local Cess levied on Abkari and Sayer Excise.

District.	One Anna Cess in Surveyed and Unsurveyed Taluks including arrears at half-anna on the latter.														
	Abkari.			Supari.			Total Cess.			76 per cent allotted to Local Fund General.			24 per cent allotted to Village School Fund.		
Bangalore... ...	17,656	13	7	1	7	7	17,658	5	2	13,420	5	3	4,237	15	11
Kolar	612	2	6	1	9	0	613	11	6	466	6	10	147	4	8
Túmkúr	957	0	9	419	5	8	1,376	6	5	1,046	1	0	330	5	5
Shimoga	1,187	0	1	...	...	...	1,187	0	1	902	1	11	284	14	2
Kadur	1,281	4	5	..	...	...	1,281	4	5	973	12	3	307	8	2
Chitaldroog ...	1,589	3	1	154	7	8	1,743	10	9	1,325	3	1	418	7	8
Mysore	4,962	7	8	18	8	11	4,981	0	7	3,785	9	5	1,195	7	2
Hassan	374	10	8	44	13	3	419	7	11	318	13	1	100	10	10
Total.....	28,620	10	9	640	4	1	29,260	14	10	22,238	4	10	7,022	10	0

No. III.—Local Cess on Sayer Collections.

Districts.	One Anna Cess in Surveyed and Unsurveyed Taluks.																	
	Coffee.			Cardamom.			Supari.			Total Cess.			76 per cent allotted to District Fund.			24 per cent allotted to Village School Fund.		
Shimoga ...	4	6	0	1	14	5	4,045	8	6	4,051	12	11	3,079	6	0	972	6	11
Kadur ...	663	11	7	5	7	8	1,710	7	7	2,379	10	10	1,808	8	10	571	2	0
Hassan ...	365	1	2	...	...	...	...	...	...	365	1	2	277	7	4	87	9	10
Total.....	1,033	2	9	7	6	1	5,756	0	1	6,756	8	11	5,165	6	2	1,631	2	9

No. IV.—Local Cess under Miscellaneous Heads of Revenue.

Districts.	One Anna Cess in Surveyed and Unsurveyed Taluks including arrears at half-anna on the latter.								
	Amount of Cess.			76 per cent allotted to Local Fund General.			24 per cent allotted to Village School Fund.		
Bangalore	704	0	1	535	0	8	168	15	5
Kolar	299	12	3	227	13	2	71	15	1
Túmkúr	333	4	11	253	5	10	79	15	1
Shimoga	250	15	11	190	12	1	60	3	10
Kadur	107	11	0	81	13	6	25	13	6
Chitaldroog	147	14	0	112	6	2	35	7	10
Mysore	3,657	14	10	2,780	0	5	877	14	5
Hassan	26	5	11	19	15	10	6	6	1
Total.....	5,527	14	11	4,201	3	8	1,326	11	3

No. V.—Abstract of Credits to Funds for the Half-year ending 30th September 1880.

Districts.	District Funds.			Village School Funds.			Local Fund General.			
Bangalore	4,812	9	2	5,926	11	6	13,955	5	11	
Kolar	8,087	9	5	2,773	3	4	694	4	0	
Túmkúr	10,897	6	3	3,851	9	0	1,299	6	10	
Shimoga	5,684	13	11	2,140	5	6	1,092	14	0	
Kadur	4,490	9	3	1,751	7	0	1,055	9	9	
Chitaldroog	6,191	6	9	2,409	2	6	1,437	9	3	
Mysore	8,193	15	8	4,660	14	9	6,565	9	10	
Hassan	11,720	7	2	3,808	3	11	338	12	11	
Total.....	60,078	13	7	27,321	9	6	26,439	8	6	Rs. 1,13,839 15 7

H. HUDSON,
Comptroller.

EDUCATIONAL DEPARTMENT.

The 14th December 1880.

The Colleges and High Schools will close for the Christmas vacation on the 18th instant, and re-open on the 17th January 1881. But all the Masters will hold themselves at disposal of the Deputy Commissioners for Census work as may be required.

L. RICE,
Director of Public Instruction,
Mysore & Coorg.

MEDICAL DEPARTMENT.

NOTIFICATION.

No. 794. *The* 13*th December* 1880.

The following removals and postings are ordered :—

Rank.	Name.	From—	To—
2nd Class Hospital Assistant.	E. B. Govindarajulu Naidu...	Jail Hospital, Mysore ...	Maha Rani's Female Hospital, Mysore.
3rd Class Hospital Assistant.	C. Narsimmalu	d. d. Kukarhalli Jail, Mysore.	Jail Hospital, Mysore.
Do	C. Krishnasami Modaliar ...	d. d. Maha Raja's Hospital, Mysore.	d. d. Kukarhalli Jail, Mysore.

J. HOUSTON, M. D., *Surgeon Major,*
Surgeon to the Mysore Commission.

ANCHE DEPARTMENT.

NOTIFICATION.

No. 818—535. *The* 3*rd December* 1880.

It is hereby notified for general information that under the authority of the Chief Commissioner of Mysore, an experimental Anche line from Vastara to Koppa has been opened and Anche Offices established at the following places on the line :—

Aldur (Múdgere Taluk.) | Balehonnur (Chikmagalur Taluk.) | Sulebail (Koppa Taluk.)

B. MURRY GUNGIAH,
Anche Bakshi.

BANGALORE MUNICIPALITY.

No. 10. *The* 14*th December* 1880.

Proceedings of a committee elected in para 10 of the Proceedings of the Cantonment Municipal Commission, dated 26th October 1880, held at the Office of the Cantonment Municipal Commission No. 12, Residency Road, at 2 P. M. on Friday the 29th October 1880, for the purpose of selecting only such works as are most urgently required to be carried out during the ensuing official year 1881—82.

President.

Doctor J. H. Orr, C. B., *Present.*

Present.—V. Sadasiva Modaliar, Esq.
Standish Lee, Esq.
Abdul Husen Saib, Esq.

Present—T. T. Leonard Esq.
Absent.—Abdul Khudus Khadri Khaji Saib, Esq.
G. G. Brown, Esq.

The list of proposed works having been read and the committee having carefully gone through the same have made a selection of the following as those most urgently required to be carried out during the following official year :—

No. I Division.

	Rs.	
Extension of D No. 3 street to Tervidi street	750	
Construction of box drain for drainage of Kaliyamma Koyil street ..	970	
Construction of foot bridge over waste weir channel at Paini Modaliar street	70	
Construction of beef stalls, Alsur..	640	
Construction of box drain, Dodigunta	200	
	———	2,630

No. II Division.

Opening out roads in Yellegaudanpalyam	1,000	
Blasting rock K. No. 1 street	50	
Improving Palm grove road	200	
Improvements Chule market	500	
	———	1,750

No. III Division.

Drainage of Kupsandra	500	
	———	500

No. IV Division.

Terracing carcass room, bullock slaughter house	405	
Formation of foot ways along main road, Cleveland Town	570	
Opening up roads, Kumbar Chule	1,100	
Construction, box drain, Armstrong road	280	
Do Cavalry road	580	
Do at road below Sappers' Lines	155	
Do Vira Pille street	475	
Do Jeweller street	270	
Do Old Poor-house road	120	
Do behind Slaughter-house	120	
Opening road to Hindu Cemetery at Mutukarpanpalyam	500	
Conversion of open rice stalls broadway into closed bazars	1,250	
Construction of sheds, Sultanji gunta bandi stands . ..	600	
	———	6,425

No. V Division.

Opening up roads behind R. C. Church, Blackpalli	2,900	
Extension—Benson's Cross road	175	
	———	3,075

No. VI Division.

Construction of silt drains, Dobbspetah	200	
General improvements	250	
Railings, Race Course road	540	
	———	990
	Grand Total....	15,370
Miscellaneous V Section drains		2,925
	Total Rs....	18,295

Repairs.	Rs. 18,295		
Cantonment roads	20,000		
Suburban roads	9,500		
Public wells	500		
Markets	800		
Slaughter-houses	600		
Latrines	500		
Bandy-stands	200		
Pounds	100		
Railings	100		
Raising water	150		
Main sewer	500		
		32,950	
Planting, &c.	1,000		
Supervision	6,320		
Compensation for purchase of houses and lands required to be taken up for public improvements	1,000		
		8,320	
		Grand Total	59,565

The Committee then proceeded to thoroughly examine and revise the Budget draft and found that while the estimated income amounts to Rs. 1,39,755, the estimated expenditure amounts to Rs. 1,47,246, thus shewing a deficiency of Rs. 8,000. To meet this deficiency they would suggest the introduction of a light animal and wheel tax and a toll payable on all carriages and animals entering the Town and Cantonment, together with a registration fee on all carts and other vehicles without springs. They propose that Schedule A of Appendix of Municipal Regulations be reduced to ⅓rd of the rate therein stated and Schedule B be reduced to ½ and that the registration fee for carts or other vehicles without springs be fixed at 8 annas each half-yearly. The Committee would also suggest that as a large portion of the roads within Municipal limits are maintained by and are entirely under the control of the Military authorities, that the lighting of these roads should in like manner be maintained by the Military authorities, the reasonableness of this proposal will at once, they are satisfied, recommend it to the approval of the Commissioners.

(Singed) J. H. Orr. *President.*
" Standish Lee.
" Abdul Husen.
" V Sadasiva Modaliar.
" T. T. Leonard.
Members of Committee.

No. 11.

Proceedings of an Ordinary Meeting of the Cantonment Municipal Commission held at their Office Premises No. 12, Residency Road, on Monday the 29th November 1880, at 7½ A. M.

President.

Dr. J. H. Orr, C. B.—*Present.*

Ex-Officio Members.

Present.—The Asstt. Quarter-Master Genl., M. Dn.
Absent.—The Dy. Surgeon Genl., H. M.'s British Forces.
The Executive Engr., Bangalore Division, Mysore D. P. W.
The District Superintendent of Police.
The Asstt. Engineer, Madras D. P. W.
The Town and Cantt. 2nd Magistrate.

Municipal Commissioners of Divisions.

No. 1, *Alsur Division.*

Present.—V. Sadasiva Modaliar, Esq.
R. P. Campbell, Esq.

No. 2, *Shule Division.*

Present.—Standish Lee, Esq.
V. Vasudeva Modaliar, Esq.

No. 3, *Arab Lines and Fort Division.*

Present.—Abdul Husen Saib, Esq.
Absent.—Captain P. Curley.

No. 4, *General Bazar Division.*

Present.—A. R. Sabhapati Modaliar, Esq.
Mahomed Saliha Saib, Esq.
Absent.— Abdul Khudus Khadri Khaji Saib, Esq.

No. 5, *Blackpalli Division.*

Present.—T. T. Leonard, Esq.
J. Ramaiya Naidu, Esq.

No. 6, *High Ground Division.*

Absent.—G. G. Brown, Esq.

Statement of Accounts.

1. The Progress Report, Account Current, Statement of Cash Balance and Assessor's Accounts for October 1880, together with the Mortuary Report for the same period, are submitted and after examination are adopted :—

Receipts.	Amount.		
I. Octroi.... Class 1. Articles of food or drink for men or animals or duty on dry and green cocoanuts ...	551	1	2
„ 2. Animals for slaughter	...	...	...
„ 3. Fuel, lighting and washing	...	...	...
„ 4. Building materials	15	7	6
„ 5. Drugs, spices and gums	...	...	...
„ 6. Tobacco and betel-leaves	3,276	2	3
„ 7. Cloth	...	...	...
„ 8. Metals	...	...	...
II. Tax on houses, buildings or lands	4,875	0	2
III. Tax on professions and trades or collections of liquor license fees...	4,441	5	4
IV. Tax on carriages, horses, &c.	...	...	...
V. Tolls on carts, carriages, &c.	...	...	...
VI. Special taxes under Section II, Act VI of 1868—Conservancy ...	...	...	...
VII. Rents ... 1. Nazul lands	27	10	0
2. Do shops	455	0	10
3. Serais	...	...	...
4. Confiscated lands	...	...	...
5. Compound or site tax	...	...	...
VIII. Gardens	...	...	...
IX. Extra-ordinary. 1. Sale of houses and lands	...	...	...
2. Loans	...	...	...
3. Refunds and recoveries	30	0	0
4. Interest on securities and loans	...	...	...
5. Other Items	...	...	...
X. Fines	46	2	0
XI. Pounds	64	0	6
XII. Miscellaneous	1,048	6	11
XIII. Transfers and Contributions—Received from the Executive Engineer, Bangalore Division, on account of grant-in-aid for repairing suburban roads	1,237	14	3
Total Rupees.....	16,068	2	11
To Cash Balance brought forward from last month's accounts.....	19,108	1	0
Total Rupees.....	35,176	3	11

Expenditure.	Amount.		
I. Collections... 1. For Octroi tax	410	3	3
2. „ Tax on houses, buildings and lands ...	416	8	0
3. „ Tax on professions and trades ...	10	0	0
4. „ Tax on carriages, houses, &c. ...	..	...	..
5. „ Tolls on carts and other vehicles ...	...	...	...
6. Special taxes	...	...	...
7. Rents assigned to Municipality ...	108	8	0
II. Head Office Charges	711	7	8
III. Public Works. 1. Supervision	481	0	0
2. *a.* Original Works	2,411	7	7
b. Purchase of lands	...	...	...
c. Compensation for houses, &c. ...	...	...	...
3. Repairs	2,450	1	0
IV. Police	2,204	6	8
V. Education	...	...	...
VI. Charitable Grants. 1. Dispensary and Medical Charges ...	...	...	...
2. Vaccination	20	0	0
3. Asylums	...	...	...
VII. Conservancy	1,848	1	11
VIII. Road watering	39	11	4
IX. Lighting	639	11	6
X. Gardens ... 1. Public Gardens	...	...	..
2. Nursery	7	0	0
3. Farms	...	...	...
XI. Extraordinary... 1. Museums and Institutes ...	...	...	...
2. Purchase of Government Notes ...	...	...	...
3. Fairs and Exhibitions	...	...	...
XII. Miscellaneous .. 1. Repayment of loans	...	...	...
2. Refund of excess collections ...	...	...	...
3. Cattle Pound charges	69	11	6
4. Statistics and mortuary registration ...	90	0	0
5. Other miscellaneous items ...	317	7	11
XIII. Reserve	68	15	0
Total Rupees... .	12,304	5	4
To Cash Balance carried to next month's accounts.....	22,871	14	7
Total Rupees.....	35,176	3	11

Resolution.—Approved.

Mortuary Register, Bangalore.

3. Statement of Births and Deaths within Cantonment Municipal limits during the month of Oct. 1880.

Causes of Deaths.	Europeans.		East Indians.		Musalmans.		Hindus.		Native Christians.		Other Classes.		Buddhists.		Total.		Total in—		Difference.	
	M.	F.	M.	F.	M.	F.	M.	F.	M.	F.	M.	F.	M.	F.	M.	F.	Oct. 1880.	Sep. 1880.	Increase.	Decrease.
Cholera ...	...	...	...	...	...	...	...	...	...	...	...	...	...	...	...	...	...	...	...	...
Small-pox ...	...	...	...	...	...	...	...	...	...	...	...	...	...	...	...	...	...	2	...	2
Fevers... ...	...	...	...	...	...	3	7	10	...	3	...	...	...	...	7	16	23	24	...	1
Bowel-complaints ...	...	...	...	...	...	...	4	2	3	...	...	...	...	...	7	2	9	17	...	8
Suicide ...	...	...	...	...	...	...	...	...	...	...	...	...	...	...	...	...	...	...	...	...
Wounding ...	...	...	...	...	...	...	...	...	...	...	...	...	...	...	...	...	...	...	...	...
Accidents ...	...	...	...	...	...	...	...	1	...	...	...	...	...	...	...	1	1	3	...	2
Snake-bite or killed by wild beasts.	...	...	...	...	...	...	...	...	...	...	...	...	...	...	...	...	...	...	...	...
Other Causes—																				
Asthma ...	...	...	...	...	1	2	2	...	...	...	...	...	...	...	3	2	5	...	...	...
Consumption ...	...	...	...	...	...	1	4	4	...	1	...	...	...	...	4	6	10	...	...	...
Convulsion ...	...	...	...	...	3	1	1	2	...	...	...	...	...	...	4	3	7	...	...	...
Dropsy ...	...	...	1	...	...	...	...	...	...	...	...	...	...	...	1	...	1	...	...	...
Fits ...	...	...	...	...	...	...	1	2	...	...	...	...	...	...	1	2	3	...	...	...
Premature birth ...	...	...	...	...	...	...	1	...	...	...	...	...	...	...	1	...	1	...	...	...
Old age ...	...	...	...	...	...	...	1	...	...	...	...	...	...	...	1	...	1	...	...	...
Leprosy ...	...	...	...	...	...	1	...	...	...	...	...	...	...	...	...	1	1	...	...	...
Debility ...	...	...	...	...	1	...	1	2	...	1	...	...	...	...	2	3	5	...	...	...
Apoplexy ...	...	...	...	...	...	...	1	...	...	...	...	...	...	...	1	...	1	...	...	...
Still-born ...	...	...	...	...	...	...	1	3	1	...	...	...	...	...	2	3	5	...	...	...
Exhaustion ...	...	...	...	...	...	...	1	...	1	...	...	...	...	...	2	...	2	...	...	...
Lock-jaw ...	...	...	...	...	2	1	1	...	...	...	...	...	...	...	3	1	4	...	...	...
Fits by child birth ...	...	...	...	...	...	...	...	1	...	...	...	...	...	...	...	1	1	...	...	...
Abscess ...	...	...	...	...	...	...	...	...	1	...	...	...	...	...	1	...	1	...	...	...
Rheumatism ...	...	...	...	...	...	...	1	...	...	...	...	...	...	...	1	...	1	...	...	...
Hepatitis ...	...	...	...	...	...	...	1	...	...	...	...	...	...	...	1	...	1	...	...	...
Tract companni[3] ...	...	...	...	...	...	...	...	1	...	...	...	...	...	...	...	1	1	...	...	...
Diabetes ...	...	...	...	...	1	...	...	...	...	...	...	...	...	...	1	...	1	...	...	...
Palsy ...	...	...	...	...	...	...	1	...	...	...	...	...	...	...	1	...	1	...	...	...
Diptheria ...	1	...	...	...	...	...	...	...	...	...	...	...	...	...	1	...	1	...	...	...
Bronchitis ...	...	1	...	...	...	...	...	...	...	...	...	...	...	...	...	1	1	...	...	...
Total Other Causes.....	1	1	1	...	8	6	18	15	3	2	...	...	...	...	31	24	55	69	...	14
Total Deaths.....	1	1	1	...	8	9	29	28	6	5	...	...	...	...	45	43	88	115	...	27
Total Births during the month...	3	...	1	3	16	12	45	49	9	7	...	...	...	...	74	71	145	201	...	56

Abstract of Mortuary Report and Percentage of Births and Deaths on the estimated Population, 78,176.

Classes.	Births.		Difference.		Percentage of Births.		Deaths.		Difference.		Percentage of Deaths.	
	Sept. 1880.	October 1880.	Increase.	Decrease.	Sept. 1880.	October 1880.	Sept. 1880.	October 1880.	Increase.	Decrease.	Sept. 1880.	October 1880.
Europeans ...	12	3	...	9	·29	·07	4	2	...	2	·09	·04
East Indians ...	9	4	...	5	·36	·16	4	1	...	3	·16	·04
Musalmáns	32	28	...	4	·21	·18	29	17	...	12	·19	·11
Hindus ...	127	94	...	33	·25	·19	64	57	...	7	·12	·11
Native Christians	21	16	...	5	·28	·21	14	11	...	3	·19	·15
Buddhists ...	...	...	...	...	...	...	...	...	...	...	...	...
Other Classes ...	...	...	...	...	...	...	...	...	...	...	...	...
Total.....	201	145	...	56	·25	·18	115	88	...	27	·14	·11

REMARKS.

There were 88 deaths during the month; 23 from fevers, 9 from bowel-complaints, 1 from accident and 55 from other causes as detailed in the previous page.

The number of deaths in October 1880 as compared with those in September 1880 and the corresponding month of last year were as follows :—

Of Europeans 2 against 4, Eurasians 1 against 4, Musalmáns 17 against 29, Hindus 57 against 64, and Native Christians 11 against 14, being 27 less than previous month, and 16 in excess of the total number of deaths registered in the corresponding month of last year.

Ages.

Classes.	No. died during the month.	Under 1 year.	1 to 6 years.	6 to 12 do.	12 to 20 do.	21 to 30 do.	31 to 40 do.	41 to 50 do.	51 to 60 do.	Above 60 do.	Total.
Europeans ...	2	1	1	...	...	..	...	...	...	..	2
East Indians ...	1	...	...	...	...	...	...	...	1	...	1
Musalmáns ...	17	10	2	...	...	1	...	...	1	3	17
Hindus ...	57	18	5	3	2	8	6	5	3	7	57
Native Christians.	11	2	4	1	...	1	1	...	...	2	11
Buddhists ...	...	...	...	...	...	...	...	...	...	...	..
Other Classes ...	...	...	...	...	...	...	...	...	...	...	...
Total.....	88	31	12	4	2	10	7	5	5	12	88

Resolution.—Approved.

Remission of House Tax.

3. The following parties have during the past month sought for remission of house-tax due on their premises for the half-year ending 31st March 1880, for the reasons stated in their application, the notice of claim to exemption having been duly given according to Municipal Rules :—

No.	Name of Petitioner.	Amount.			House where situated.	Grounds on which remission is claimed.	Remarks.
331	Messrs. Abraham & Co.	8	3	8	7 Alsur Road ...	Untenanted for 104 days, *viz.* from 1st October 1879 to 12th January 1880.	This on examination is found to be correct.

Resolution.—Sanctioned.

List of Agreements entered into by the President.

4. List of agreements entered into by the President during the month of October 1880.

No.	Subject.
1	Agreement executed by Chaudri Mahomed Usman for fixing of vertical wooden bars to railings on roads.

Resolution.—Approved.

Budget for 1881—82.

5. Read—Proceedings of the Budget Committee selecting works for insertion in the Budget for the official year 1881—82.

Resolved.—That the Municipal Executive Engineer be directed to submit detailed plans and estimates of the works approved of and sanctioned by the Committee, and that in accordance with Section 28 of the Municipal Regulations of 1871 a draft Budget be prepared shewing the estimated income and proposed expenditure of the Municipality for the year commencing from 1st April 1881, and that a printed copy of the same be furnished to each of the Municipal Commissioners, as provided by the Regulations published in the *Mysore Gazette*, at least 7 days before the ordinary meeting of the Board in December 1880, before which the Budget will be laid for final consideration.

General Ottley's resignation of his appointment as Municipal Commissioner, No. 6 Division.

6. Read—Letter from Major-General Ottley, resigning his appointment as Municipal Commissioner, No. 6 High Ground Division.

Resolution.—In accepting General Ottley's resignation the Board consider it due to that officer to place on record their appreciation of the valuable services rendered by him to the Municipality during the period he has been a member of the Board.

Market Prizes.

7. Election of a Committee for reporting on the Market Prizes to be awarded on the 23rd of December 1880.

Resolved.—That the undermentioned Committee be appointed to report on the Market Prizes to be awarded on the 23rd December 1880.

Doctor J. H. Orr, C. B.—*President.*

Members.

Captain McLeod.
R. P. Campbell, Esq.
S. Lee, Esq.
Abdul Husen Saib, Esq.
A. R. Sabhapati Modaliar, Esq.
J. Ramaiya Naidu, Esq.
G. G. Brown, Esq.

Rice Mandis in Broadway.

8. Read—Application from Chaudri Mahomed Usman offering Rs. 500 for the Rice Mandis in Broadway.

Resolution.—Resolved that these mandis be now put into thorough repair and that they be retained in the possession of the Municipality.

Railway Aloe hedge.

9. Read—Proceedings of the Chief Commissioner of Mysore, No. 4763—Ml. 277, dated 17th November 1880, relating to the aloe hedge along the Railway within Municipal limits.

Resolution.—To be recorded.

Application to Government for the extension of the Hackney Carriage Act to Bangalore.

10. Read—Letter dated 16th November 1880 from T. T. Leonard, Esq., Municipal Commissioner, No. 5 Division, giving notice that he will move at the next meeting for an application being made to the Local Government for the extension of the Hackney Carriage Act to Bangalore.

Resolved.—That the Secretary to the Chief Commissioner be again addressed wt . h view to the extension of the Hackney Carriage Act into Bangalore.

Lighting Contract.

11. Read—Proceedings of the Chief Commissioner of Mysore, No. 4770—Ml. 278, dated 18th November 1880, relating to the lighting contract.

Resolution.—At the suggestion of Mr. Lee it was resolved that the consideration of these Proceedings be deferred to after the opening of the tenders for lighting the Cantonment.

Tenders for Lighting Contract.

12. Read tenders for lighting the Cantonment of Bangalore for one year, *viz.*, from 1st January to 31st December 1881.

Resolution.—The Commissioners having accepted the suggestions of the Committee on Lights that a better and cheaper mode of street lighting could probably be introduced at no distant date, and being unanimously of opinion that the interests of the public would be best secured by continuing the lighting contract to the former contractors for another year at a somewhat reduced rate, regret extremely to find that Government should not only have disapproved of their resolution to the above effect but should at the same time have thought it necessary to pass so severe and painful a censure on their proceedings as that contained in the Proceedings of the Chief Commissioner and order thereon No. 4770—Ml. 278, dated 18th November 1880. The resolution of the Commissioners had only been arrived at after having given the matter the very fullest consideration and they considered then and would respectfully add that they are still of opinion that they had disposed of the matter in a manner the most advantageous both to the public and to the Municipality; but as they feel that it would be unbecoming on their part to press their views further on the attention of the Chief Commissioner, they resolve that an abstract of all the tenders now received, together with the originals, be submitted to the Chief Commissioner for such orders as he may be pleased to direct.

At the suggestion of Captain McLeod it was further resolved that the petition received from Nanjappa & Brothers should also be submitted to the Chief Commissioner and that Mr. Gordon's attention be invited to the clause wherein the petitioners agree to paint the lamp-posts, as also to provide such lanterns as may be required during the term of their contract free of cost, both which conditions are extra to and not embodied in any of the other tenders.

Rice Mandis in Broadway.

13. Read—Application from the Trustees of the Kazi Saib's Mosques offering Rs. 520 for the Rice Mandis in Broadway.

Resolution.—That the Trustees of the Kazi Saib's Mosque be informed that the Mandis applied for are not for disposal.

BANGALORE CENSUS.

The 7th December 1880.

The President, Municipal Commission for the Cantonment and Town of Bangalore, notifies for general information that the General Census of the population of the Cantonment and Town of Bangalore, ordered by the Government of India, will be taken on the night of the 17th February 1881.

By Section 221 of the Bangalore Municipal Regulations it is ordered that any person wilfully neglecting or refusing correctly to fill up and affix his signature or mark to any such schedule or return so left at his place of residence, or who shall neglect or refuse to return the same to the Enumerator or other officer when called upon so to do, or to furnish the necessary information to an Enumerator to fill up the same for him if he do not know how to write, shall be liable to a penalty not exceeding two hundred rupees and may also be detained in custody until he shall have correctly filled up and signed, or affixed his mark to the said schedule or return: Provided that it shall be the duty of the Enumerator, if required, to fillup all schedules or returns for those who are unable to write. *Section* 222 inflicts a further fine not exceeding rupees one hundred on any person who does not properly amend his return, if required by the Enumerator.

The President relies upon the cordial co-operation of the inhabitants of the Cantonment and Town of Bangalore to ensure that the Census shall be really accurate.

J. H. ORR,
President, Cantt. Munl. Commn.

NUNDYDROOG DIVISION.

NOTIFICATION.

The 13th December 1880.

By order of the District Judge, Nundydroog Division, the undermentioned houses belonging to Peritambi Pille, the adopted son, and legal representative of Tiruvira Pille of Bangalore, (deceased), by his adoptive mother and guardian Varadamma, defendant in Execution Case No. 18 of 1880, will be sold by public auction, at 11 A. M. on Thursday the 23rd December 1880, in front of the District Judge's Court at Bangalore :—

1. One house and ground, situated in Osborne Road, Municipal No. 1, Grant No. 131, bounded on the north by Osborne Road, south by Alsur Tank, east by Alsur Tank, west by Dr. Duckworth's house ; valued at Rs. 6,000.

2. One house and ground, Municipal No. 7, situated in Alsur Road, bounded on the north by Alsur Tank, south by Alsur Road, east by Balaji Rao's house, west by Mr. J. P. Hayes and Alli Asker's property ; valued at Rs. 12,000.

3. An upstair house with its tile-roofed house, Municipal No. 208, with its front and back-yards, situated in Old Market Road, Muttuchari District, Cantonment, Bangalore, and bounded on the north by Husen Saib's house, south by Old Market Road, east by Police A line and Cross lane, west by Lahur Subedarkhan's house ; valued at Rs. 1,000.

4. A tile-roofed house with its vacant ground (kháli jága) situated in Armstrong Road, Cantonment, Bangalore, and bounded on the north by Yekambram's house, south by Rajabhadur Modali's house, east by Armstrong Road, west by Bansvadi Munisami Modali's house ; valued at Rs. 500 subject to the lien of Vijayarangam Modali.

5. A terraced house with gadikhana, with front and back-yards, Municipal No. 47, situated in Virapille's street, Cantonment, Bangalore, and bounded on the north by Virapille's street, south by Kartanienam Ahmed Saib's house, east by the premises occupied by the Hindu Dravyasekharanidhi Bank, (Limited), west by Rajaram Pille's house ; valued at Rs. 15,000 subject to the lien of Vijayarangam Modali.

Terms of Sale.

1. The highest bidder shall be the purchaser and if any dispute arise respecting a bid, the property shall be immediately put up again at the last undisputed bid and resold.

2. The purchaser shall pay down immediately after the sale is declared into the hands of the auctioneer (Nazir), a deposit of 25 per cent in part of the purchase money, and the remainder before 5 P. M. on the 15th day after the sale.

3. If any purchaser shall fail to comply with the above conditions his deposit shall be forfeited, and the property shall be resold at his risk, but he will not be entitled either to the property or any part of the sale proceeds of such sale.

T. LAKSHMAN RAO,
Sheristadar & Nazir,
District & Sessions Court.

BANGALORE DISTRICT.

The 8th December 1880.

IN THE COURT OF THE SUBORDINATE JUDGE, BANGALORE DISTRICT.

In pursuance of orders of this Court made in the matter of the undermentioned insolvent-debtors, it is ordered that the said debtors be declared insolvents under the provisions of Section 351, Chapter XX of the Code of Civil Procedure, in respect of all the debts mentioned in their schedules. :—

Number of the Case.	Names of Insolvents.	Dates on which orders were passed.
1 of 1880 ...	1. Jaffar Saib, 2. Mastan Saib, 3. Shek Ahmed, trading under the style of Mastan Saib & Co,	25th May 1880.
2 of 1880 ...	Lingal Nayik	26th February 1880.
3 of 1880 ...	Bettada Abdul Ganus Saib	17th June 1880.
7 of 1880 ...	Shankarappa	Do.
10 of 1880 ...	Ganigara Munisami	15th July 1880.
13 of 1880 ...	A. Munisami Modaliar	17th June 1880.
14 of 1880 ...	Pillamma	Do.
16 of 1880 ...	Papanna	15th July 1880.
17 of 1880 ...	Nanjappa Mestri	Do.
197 of 1880 ..	Ramappa Nayik and another	21st November 1880.

W. JENNINGS,
Subordinate Judge.

TUMKUR DISTRICT.

The 7th December 1880.

NOTICE UNDER SECTION 354 OF THE CODE OF CIVIL PROCEDURE.

It is hereby declared that the undermentioned person is an insolvent and as such entitled to the benefit of the provisions of Chapter XX of the Code of Civil Procedure, and it is ordered that the said insolvent be and is hereby discharged from custody and from all liability to be arrested or imprisoned in respect of any of the debts mentioned in the schedule filed with records of the case concerned.

Sakoji Rao. .. In Insolvent Case No. 13 of 1880.

The 10th December 1880.

NOTICE UNDER SECTION 354 OF THE CODE OF CIVIL PROCEDURE.

It is hereby declared that the undermentioned person is an insolvent and as such entitled to the benefit of the provisions of Chapter XX of the Code of Civil Procedure, and it is ordered that the said insolvent be and is hereby discharged from custody and from all liability to be arrested or imprisoned in respect of any of the debts mentioned in the schedule filed with record of the case concerned.

Balé Nanjamma .. In Insolvent Case No. 17 of 1880.

E. CHITAMBRAM IYER,
Sub-Judge.

NOTIFICATION.

The 11th December 1880.

Notice is hereby given that sealed tenders will be received by the Superintendent of the Túmkúr Jail up to the 1st March 1881 for the supply by contract of all articles of diet, &c., required for the use of the prisoners confined in the Túmkúr Jail from 1st April 1881 to 31st March 1882, both days inclusive.

2. No tenders will be received after the date named above.

3. Scales of diet and any further information anent the contract can be obtained on application to the Superintendent of the Jail.

E. CHITAMBRAM IYER,
Superintendent of Jail.

MYSORE DISTRICT.

The 18th November 1880.

NOTICE UNDER SECTION 354 OF THE CODE OF CIVIL PROCEDURE.

It is hereby declared that the undermentioned person is an insolvent and as such entitled to the benefit of the provisions of Chapter XX of the Code of Civil Procedure, and it is ordered that the said insolvent be and is hereby discharged from custody and from all liability to be arrested or imprisoned in respect of any of the debts mentioned in the schedule filed with records of the case concerned.

Hutchaiyana Máyi.. .. .. In Insolvent Case No. 8 of 1880.

The 8th December 1880.

NOTICE UNDER SECTION 354 OF THE CODE OF CIVIL PROCEDURE.

It is hereby declared that the undermentioned person is an insolvent and as such entitled to the benefit of the provisions of Chapter XX of the Code of Civil Procedure, and it is ordered that the said insolvent be and is hereby discharged from custody and from all liability to be arrested or imprisoned in respect of any of the debts mentioned in the schedule filed with records of the case concerned.

Masud Sab .. .. In Insolvent Case No. 9 of 1880.

T. NARAHARI RAO,
Sub-Judge.

COORG.
NOTIFI-
The 11th

Notice is hereby given for general information that the Government dues on the undermentioned
Superintendent's Office at Mercara at noon on Monday the 20th December 1880,

No.	Title-deed No.	Name of Defaulter.	Name of Estate.	Village, Nad and Taluk.	Area.	For 1876—77. Assessment.	Difference of Assessment.	Survey Charges.	Total.
			Kiggatnad Taluk.						
2484	...	Kerianidira Subbaiya.	Malakekadu ...	Poradu in Anjigerinad.	9·55	...	...	...	...
115	107	Bittiyanda Aiyappa.	Narakadumalé ...	Rudraguppe in Bettiyatnad.	157·21	...	...	...	...
2389	...	Kuppanda Subbaiya...	Najakolli ...	Do do	42·24	...	...	...	...
124	112	Do Chinnappa...	Kattekadu ...	Do do	48·53 Grass. 6·16 42·37	...	...	...	...
793	316	Koluvandra Iyappa ...	Bembukadu ...	Nokya do ...	158·07	...	...	...	...
2275	...	Kanjitanda Kariyappa.	Angarekadu ...	Badaga do ...	9·53 Grass. 1·6 8·47	...	...	...	...
2279	...	Do do ...	Todiyamottepaisari.	Do do ...	0·14	...	...	...	...
4352	...	Bettakurubara Gottugara Kala.	Gorikadu or Kallumottepaisari.	Nemmale in Tavalgerimurnad.	8·81	...	...	...	...
			Nanjarajapatna Taluk.						
1174	361	Iymudiyana Medappa.	Batta kadu ...	Nidavattu in Gadinad.	15·29	...	...	...	...
			Yelsavirshime Taluk.						
522	...	Goldsmith Yellamma.	Kanremaradakadu ...	Masgada in Bilhada Hobli.	27·48	...	...	...	...
			Padinalknad Taluk.						
3347	...	Babbira Medappa ...	Balangadu ...	Kolagadallu in Bengunad.	2·51	...	...	...	...
4210	...	Sthanika Isvaraiya ...	Balangolli ...	Tannimani in Tavunad.	15·62	...	...	...	...
3220	...	Konkani Dassappa ...	Kodambarikekadu ...	Tavuru do	1·30	...	...	...	...
2894	...	G. Poreyana Kariyanna.	Molayatti Parambu...	Kadiyatturu in Kuyangerinad.	11·01	...	...	...	...
103	...	Br. Bijapura Ram-	Balliyakollitundu ...	Bettattur in Kuyangerinad.	258·38	...	...	...	...

CATIONS.

November 1880.

Coffee-Estates in Coorg being still unpaid, they will be put up to public auction at the 2nd Assistant and sold to the highest bidders above the upset price of the outstandings.

For 1877—78.				For 1878—79.				For 1879—80.			
Assessment.	Difference of Assessment.	Survey Charges.	Total.	Assessment.	Difference of Assessment.	Survey Charges.	Total.	Assessment.	Difference of Assessment.	Survey Charges.	Total.
...	...	...	...	19 1 7	...	...	19 1 7	19 1 7	...	...	19 1 7
...	...	...	...	314 6 9	...	...	314 6 9	...	...	...	...
...	...	...	...	84 7 8	...	...	84 7 8	84 7 8	...	...	84 7 8
...	...	...	...	84 11 10	...	...	84 11 10	84 11 10	...	...	84 11 10
...	...	...	...	316 2 2	...	...	316 2 2	316 2 2	...	...	316 2 2
...	...	...	...	16 15 0	...	...	16 15 0	...	...	...	...
...	...	...	...	0 14 1	...	...	0 14 1	...	...	...	...
...	...	...	...	...	19 6 6	...	19 6 6	...	...	...	...
13 9 4	...	...	13 9 4	30 9 4	...	...	30 9 4	30 9 4	...	...	30 9 4
23 15 4	...	...	23 13 4	54 15 4	...	...	54 15 4	54 15 4	...	...	54 15 4
...	...	...	...	5 0 4	16 1 4	...	21 1 8	...	...	...	...
...	...	...	...	...	...	...	...	31 3 10	...	...	31 3 10
...	...	...	...	2 9 7	...	...	2 9 7	...	...	...	...
...	...	...	...	...	...	...	...	22 0 4	...	...	22 0 4
...	...	...	...	...	...	...	...	512 12 2	...	...	512 12 2

No.	Title-deed No.	Name of Defaulter.	Name of Estate.	Village, Nad and Taluk.	Area.	Total. Assessment.	Total. Difference of Assessment.	Total. Survey Charges.	Total. Total.	Process Charges.	Grand Total.
				Kiggatnad Taluk.							
2484	...	Karianidira Subbaiya.	Malakekadu ...	Poradu in Anjigerinad.	9·55	38 3 2	...	...	38 3 2	4 4 6	42 7 8
115	107	Bittiyanda Aiyappa.	Narakadumalé ...	Kudragupre in Bettiyatnad.	157·21	314 6 9	...	...	314 6 9	4 4 6	318 11 3
2389	...	Kuppanda Subbaiya...	Najakolli	Do do	42·24	168 15 4	...	...	168 15 4	4 4 6	173 3 10
124	112	Do Chinnappa ...	Kattekadu ...	Do do	48·53 Grass. 6·16 42·37	169 7 8	...	...	169 7 8	4 4 6	173 12 2
793	316	Koluvandra Iyappa ...	Bembukadu ...	Nokya do	158·07	632 4 4	...	...	632 4 4	4 4 6	636 8 10
2275	...	Kanjitanda Kariyappa.	Angarekadu ...	Badaga do	9·53 Grass. 1·6 8·47	16 15 0	...	...	16 15 0	4 4 6	21 3 6
2279	...	Do do ...	Todiyamotte paisari.	Do do	0·47	0 14 1	...	...	0 14 1	4 4 6	5 2 7
4352	...	Bettakurubara Gottugara Kala.	Gorikadu or Kallumotte paisari.	Nemmale in Tavalgerimurnad.	8·81	19 6 6	...	...	19 6 6	4 4 6	23 11 0
				Nanjarajapatna Taluk.							
1174	361	Iymudiyana Medappa.	Betta kadu ...	Nidavattu in Gadinad.	15·29	74 12 0	...	...	74 12 0	4 4 6	79 0 6
				Yelsavirshime Taluk.							
522	...	Goldsmith Yammale.	Kanremarada kadu ...	Masgada in Bilahada Holli.	27·48	133 12 0	...	...	133 12 0	4 4 6	138 0 6
				Padinalknad Taluk.							
3347	...	Babbira Medappa ...	Balangadu ...	Kolagadallu in Bengunad.	2·51	5 0 4	16 1 4	...	21 1 8	4 4 6	25 6 2
4210	...	Sthanika Isvaraiya ...	Balongolli ...	Tannimani in Tavunad.	15·62	31 3 10	...	...	31 3 10	4 4 6	35 8 4
3220	...	Kankani Dasappa ...	Kodambarike kadu ...	Tevuru do ...	1·30	2 9 7	...	...	2 9 7	4 4 6	6 14 1
2894	...	G. Poreyana Kariyanna.	Molayatti parambu ...	Kadiyatturu in Kuyangerinad.	11·01	22 0 4	...	...	22 0 4	4 4 6	26 4 0
103	...	Br. Bijapura Rambayi.	Balliyakollitundu ...	Bettattur in Kuyangerinad.	256·38	512 12 2	...	...	512 12 2	4 4 6	517 0 8

Boundaries.			
North.	South.	East.	West.
Paisari land.	Paisari land and Cheriya Medri Iyappa's jamma land.	Paisari land.	No. 2485 Mallengala Ponnappa and Muddaiya's Malakekadu.
Mr. Rose's and Government jungle.	Ryots' jungle.	Ryots' bané.	Mr. Savaghe and Kariyamalle.
Sarkar paisari Nagakolli.	Sarkar paisari Nagakolli and Mr. Drummond's Nagakolli estate.	Mr. Drummonds Najakolli estate.	Sarkar paisari Nagakolli.
Grass bané and Ryots' bané.	B. Kariyappas.	Government jungle and Ryots' bané.	Clifton and grass bané.
Paisari jungle, Camping ground for troops, paisari land and grass land.	Paisari jungle.	Paisari jungle.	Paisari jungle.
No. 2280 Kongandra Biddaiya's Devarapalli estate.	Paisari Siripalimotte grass land and paisari kolli jungle.	Kangitandra Kariyappa's Tumbemadu jamma Kokaribelu warga and Aiyappadevara jungle.	Paisari Siripalimotte grass land and Sarkar perau bu grass land.
Kangitandra Kariyappa's jahagir, Baliyatevawargada Peggu bané.	No. 2277 Malavandra Ganapati's Todiyamotte paisari coffee estate and Kangitandra Kariyappa's jahagir baliyatevawargada Peggu bané	Kangitandra Kariyappa's jahagir baliyateva wargada Peggu bané.	No. 2277 Malavandra Ganapati's Todiyamotte paisari coffee estate and No. 2278 Malavandra Atchaiya's Todiyamotte paisari coffee estate.
Paisari forest.	Paisari forest.	Paisari forest.	Paisari forest.
Paisari.	Paisari.	Paisari.	KarirraKuttaiya's jamma bané.
Sarkar paisari land.	Sarkar paisari land.	Sarkar paisari land.	Goldsmith Viranna and Sarkar paisari land.
Sarkar paisari grass land.	Kumbara Somusmotte bané kadu coffee and Devangada Aliya's bané kadu, Sarkar paisari grass land.	Bidandi Devaiya's mottebané kadu.	Sarkar paisari grass land.
Paisari Balakadu jungle.	Kodi Krishnaiya's Balangolli estate.	Palakadu paisari motte bané, Br. Rudraiya's gundikadu and Bellipadi Monna's jamma Pitlubali wargada Dodda bane.	Jevulebenda motte paisari bané and Paladaka Subbu's jamma, Bellipalina Kandakadu wargada Balangolli bané.
A. Kunna's Nadumateva wargada Kulukanti jamma bané.	Government paisari Kadambarike grass bané and K. Subbaiya's brother Krishnaiya's Kodambarike wargada sagu paddy field.	K. Subbaiya's brother Krishnaiya's Kodambarike wargada sagu paddy field.	A. Kunna's Nadumateva wargada Kulukanti jamma bané and Government paisari Kodambarike grass bané.
Kenganda Senkra's Aditeva wargada Aramanedalada Molayatti parambu, 2nd bit jamma and Tore Akkamma's Pudiyatevada warga jamma Boyandane bané and Koppada Bellu's Malliteva wargada jamma mokki bané.	Maleyara Belli's Molayetti parambu, Billavara Kariya's Molayetti parambu, Madivala Karimbu's Molayetti parambu and paisari kadu.	No. 2893 Pudiya Ammakka's Molayetti parambu paisari Chaliyanda Bellu's Molayetti parambu and paisari kadu.	Kenganda Senkra's Aditeva wargada Aramanedalada Molayetti parambu 2nd bit jamma.
Mr. Mann's jungle.	Grass hill.	Mr. D. Stewart's estate.	Mr. Stewart's jungle.

No.	Title-deed No.	Name of Defaulter.	Name of Estate.	Village, Nad and Taluk.	Area.	For 1876—77. Assessment.			Difference of Assessment.			Survey Charges.			Total.		
				Padinalknad Taluk.													
4086	...	Chauri Ponnappa ...	Pallitakkadatundu ...	Bettatur in Kuyangerinad.	186·80 Devara kadu 39·93 / 146·87	...	...	...	...	...	...	...	...	...	...	...	...
3231	...	Washerman Subba ...	Joyiparekadu ...	Bettageri do ...	3·98	...	...	...	...	...	...	...	...	...	...	...	...
				Mercara Taluk.													
1299	...	Nachabhat Janardanabhat	Kadubané ...	Kaggodlu in Kaggodlunad.	16·21	...	...	...	...	...	...	...	...	...	...	...	...
1301	...	Subramannya Jois ...	Koradakadu ...	Do do ...	15·40	...	...	...	...	...	...	...	...	...	...	...	...
2020	...	B. Mandappa ...	Bakkadabané ...	Biligeri do ...	51·71	103	6	10	...	...	...	...	...	...	103	6	10
488	...	Br. Subrao ...	Anekundadapaisari ...	Kaggodlu do ...	27·86	...	...	...	473	11	2	5	4	0	478	15	2
2260	...	Br. Subrao ...	Kayamkadu ...	Mekeri do ...	19·09	...	...	...	...	...	...	...	...	...	...	...	...
1685	365	Biddandra Boppanna.	Tombatamané ...	Hakatturu in do ...	82·53 Grass 3·83 / 78·70	...	...	...	234	3	0	...	...	...	234	3	0
1592	...	Mus. Jamal ...	Hosabanémottekadu.	Máde in do ...	1·42	...	...	...	...	...	...	...	...	...	...	...	...
80	...	Br. Krishnamachari.	Suttumotte ...	Mekeri in do ..	5·97	11	15	0	...	...	...	...	...	...	11	15	0
1833	...	Kuttatti Changappa.	Kungandri kadu ...	Kotageri in do ...	7·72	15	8	0	...	...	...	...	...	...	15	8	0
1410	...	G. Dasi... ...	Talemarada Athanikadu.	Do do ...	1·41	...	...	...	...	...	...	...	...	...	...	...	...

For 1877—78.				For 1878—79.				For 1879—80.			
Assessment.	Difference of Assessment.	Survey Charges.	Total.	Assessment.	Difference of Assessment.	Survey Charges.	Total.	Assessment.	Difference of Assessment.	Survey Charges.	Total.
...	...	...	...	...	...	...	...	249 2 7	...	...	249 2 7
...	...	...	...	...	...	...	...	7 2 4	...	...	7 2 4
32 7 5	...	...	32 7 5	32 7 5	...	...	32 7 5	32 7 5	...	...	32 7 5
...	...	...	...	18 12 10	...	...	18 12 10	30 12 10	...	...	30 12 10
103 6 10	...	...	103 6 10	103 6 10	...	...	103 6 10	103 6 10	...	...	103 6 10
...	...	...	...	55 11 8	...	...	55 11 8	55 11 8	...	...	55 11 8
38 2 11	217 1 6	3 9 0	258 13 5	38 2 11	...	...	38 2 11	38 2 11	...	...	8 2 11
...	...	...	...	...	...	...	...	157 6 5	...	...	157 6 5
...	...	...	...	2 13 4	...	...	2 13 4	2 13 4	...	...	2 13 4
...	...	...	...	11 15 0	...	...	11 15 0	11 15 0	...	...	11 15 0
...	...	...	...	15 8 0	...	...	15 8 0	15 8 0	...	...	15 8 0
...	...	...	...	2 13 0	...	...	2 13 0	2 13 0	...	...	2 13 1

506

No.	Title-deed No.	Name of Defaulter.	Name of Estate.	Village, Nad and Taluk.	Area.	Total. Assessment.	Total. Difference of Assessment.	Total. Survey Charges.	Total. Total.	Process Charges.	Grand Total.
			Padinalknad Taluk.								
4086	...	Chauri Ponnappa ...	Pallibakkadatundu ...	Bettatur in Kuyangerinad.	186·80 Devara kadu. 39·93 146·87	249 2 7	...	...	249 2 7	4 4 6	253 7 1
3231	...	Washerman Subba ...	Joyiparekadu ...	Bettageri do	3·98	7 2 4	...	...	7 2 4	4 4 6	11 6 10
			Mercara Taluk.								
1299	...	Nachabhat, Janardanabhat.	Kadubané ...	Kaggodlu in Kaggodlunad.	16·21	97 6 3	...	...	97 6 3	4 4 6	101 10 9
1301	...	Subramanyajois ...	Koradakadu ...	Do do	15·40	49 9 8	...	...	49 9 8	4 4 6	53 14 2
2020	...	B. Mandappa ...	Bakkadabané ...	Biligeri do	51·71	413 11 4	...	...	413 11 4	4 4 6	417 15 10
488	...	Br. Subrao ...	Anekundadapaisari ...	Kaggodlu do	27·86	111 7 4	473 11 2	5 4 0	590 6 6	4 4 6	594 11 0
2260	...	Br. Subrao ...	Kayamkadu ...	Mekeri do	19·09	114 8 9	217 1 6	3 9 0	335 3 3	4 4 6	339 7 9
1635	365	Biddandra Boppanna.	Tombattamané ...	Hakatturu in do	82·53 Grass 3·83 78·70	157 6 5	234 3 0	...	391 9 5	4 4 6	395 13 11
1592	...	Mus. Jamal ...	Hosabanemottekadu.	Máde in do	1·42	5 10 8	...	...	5 10 8	4 4 6	9 15 2
80	...	Br. Krishnamachari.	Suttumotte ...	Mekeri in do	5·97	35 13 0	...	...	35 13 0	4 4 6	40 1 6
1833	...	Kuttatti Changappa.	Kungandrikadu ...	Kotageri in do	7·72	46 8 0	...	...	46 8 0	4 4 6	50 12 6
1410	...	G. Dasi... ...	Talemanada Athanikadu.	Do do	1·41	5 10 0	...	...	5 10 0	4 4 6	9 4 6

N. *B.*—The purchaser will be subject to pay the assessment for the current year *viz.*, 1880—81, as well as

Conditions of Sale.—Para.—1. The highest bidder will be the purchaser subject to confirmation of sale, provided he deposit 25 per cent

2. The balance of the purchase money must be paid before noon of the 30th day from the date of sale, but

3. Should the purchaser fail to pay the balance of the purchase money within the time fixed, the sale will in the amount realized by the re-sale, and in the calculation of such deficiency the deposit that has by the re-sale.

4. Any amount due from a defaulting purchaser may be recoverd under the rules or practice in force

5. All sales and re-sales shall be subject to confirmation by the Superintendent of Coorg, who may order any by him. If within three months from the date of sale, the Superintendent shall not have reversed

6. In any case in which a sale or re-sale may be cancelled, the purchaser will receive back the money or

Boundaries.			
North.	South.	East.	West.
Somaga Saiya's Palli Bakkada tundu Yelada estate and Somaga Saiya's Palli Bakkada tundu Ilachi estate Sarkar paisari kadu.	Sarkar paisari kadu.	Mangandri Bellivappa's Chembadakolli tundu Yelada estate and Padamadi Devara kadu and Mangandri Bellayappa's Chambadakolli tundu Yelada estate.	Padamadi Devaratandimotte kadu and Captain Taylor and Company's Bunter coffee estate.
Kadle Medu's gundi teva warga paddy field Kadle Medu's Joyipare kadu paisari coffee.	Patel Ranganna's Balamanda warga jamma jungle.	Kachavalada Venkata's Joyipare kadu and Bantra Jattanna's Joyipare kadu.	Genge Subla's jamma Irana warga bané and Niyane Timmaiya's Tingala warga jamma jungle.
Horurnurokalnad Kodagadala village Sarkar kadu bané.	Kagodlunad, Kagodlu village, Sarkar kadubané.	Horurnurokalnad Kodagadalu village, Sarkar kadubané.	Kagodlunad, Kagodlu village, Sarkar kadu bumi.
Honna Kote Kunnappa's jammada Muttira wargada kadu bané and Brahman Govindaiya's Sagina Irumanda wargada Irumandane.	Teluru Ukkanna's jammada Kungirana wargada kadu bané boundary of Hakaturu village and Aramane kadang.	Br. Kukke Lingaiya's Sagina Boradira wargada Govinda bané and boundary of Hakaturu village and Aramane kadang.	Mandri Puttappa's jammada Podiya wargada kadu bané and Teluru Ukkanna's jammada Kungirana wargada kadu bané.
Masaligauda's Nayikuppa jammada grass land Korgi Akateva warga and Telugara Naranappa's sagina kadu bané grass land Chettirandabaliyateva warga.	Manichaganda's Karani bané jammada grass land Bettanda Baliyatevawarga and Iyappa Devara kadu.	Telugara Narnappa's sagina kadu bané grass land Chettaranda baliyatevawarga jungle Kokale baliya and Brahman Subbaiya's Toirane sagina teva warga.	Brahman Saraswati Krishnaiya's Muni bané sagina grass land Bettanda warga and Masaligauda's Nayikuppa jammada grass land Korgi Akateva warga.
Sarkar paisari.	Sankrabhatta and Govindabhatta.	Kuruvanu Muttanna and Sarkar paisari.	Ramabhatta, Nacha bhatta and Janardana bhatta.
Kuttatti Iyappanna's Kullukulu estate and Major Martin's Kullu kulu estate and paisari kayam kadu motte grass hill.	Minachya's sagu Tirumudi wargada tota bané and Brahman Subramanya's kayam kadu estate.	Paisari kayam kadu motte grass hill and Brahman Subramannaiya's kayam kadu estate.	Kayam kadu paisari bané.
Bette Iyappa's Devara bané and Kengeri kadu paisari.	Government paisari Tombattamane kadu.	Ammattanna Ponnappa's Kengeri kadu coffee estate and Government paisari Tombattamane kadu.	Mr. Drummond's Thombattamane coffee estate.
No. 1437 Krishnappa's Hosabané motte paisari coffee estate.	V. Muniyappa's Hosabané motte paisari hitlu and No. 1383 V. Muniyappa's Hosabané motte paisari coffee estate.	Road.	No. 1383 V. Muniyappa's Hosabané motte paisari coffee estate and No. 1585 Mus. Jaber Khan's Hosabané motte paisari coffee estate.
Syed Jamal's.	Road.	Jaffer Sait's.	Mahomed Husen's.
Maktum Saib.	Maktum Saib and Channabasappa's jamma jungle.	Maktum Saib.	Channabasappa's jamma jungle and Udiyandra Mandanna.
Devangada Kenchetti's sadlimarada Attani kadu coffee estate and No. 1409 Gauligara Subba's sadlemarada Attani kadu coffee estate.	Mus. Karim Saib's sagina Telapanada wargada Telapanada baliya bané.	No. 1409 Gauligara Subba's sadlemarada Attani kadu coffee estate.	Devangada Kenchetti's sadlemarada Attani kadu coffee estate.

survey and other charges that may become due.
of the purchase money immediately; should he fail to make such deposit the lot will be put up again.
if that day happens to be a Sunday or holiday the payment must be made before noon on the next office day.
be cancelled, the deposit will be forfeited and the land may be again put up to auction. The defaulting purchaser will be liable for any deficiency
been forfeited shall not be reckoned. The defaulting purchaser at the first sale shall moreover have no claim to any surplus that may be realized

for the recovery of arrears of land revenue.
sale or re-sale to be cancelled. The decision of the Superintendent is open to revision by the Chief Commissioner and may be modified or reversed
the sale or re-sale, the same shall be held to have been confirmed by him.
deposit paid by him, but will have no claims to interest or damages.

The 11th November 1880.

Notice is hereby given for general information that the arrears due on the undermentioned coffee estates in Coorg being still unpaid, they will be put up to public auction at the 2nd Assistant Superintendent's Office at Mercara, at noon on Monday the 20th December 1880, and sold to the highest bidder above the upset price.

Survey No.	Title-deed No.	Name of Defaulter.	Name of Estate.	Village, Nad and Taluk.	Area.	Boundaries. North.	South.	East.	West.	Assessment for 1879-80.			Costs and Charges.			Total.		
09	114	Mr. W. V. Drummond.	Lilford ...	Hakatur Village in Kaggodlunad of the Mercara Taluk.	113·93	Iyappa Davu ...	Government bane ...	B. Bopu's... ...	Government bane ...	227	13	8	4	4	6	232	2	2
29	131	Mrs. Annie Margaret Fowler.	Glen Moriston	Heggal in Yedenalknad of the Yedenalknad Taluk	282·81	Fowler estate 2rd part Government bane.	Fowler's jungle Bradford ...	Fowler's jungle and Rose's jungle.	Fowler's jungle ...	565	9	11	4	4	6	569	14	5

N. B.—The purchaser will be subject to pay the assessment for the current year, *viz.*, 1880—81.

Conditions of Sale.—Para.—1. The highest bidder will be the purchaser subject to confirmation of sale, provided he deposit 25 per cent of the purchase money immediately; should he fail to make such deposit the lot will be put up again.

2. The balance of the purchase money must be paid before noon of the 30th day from the date of sale, but if that day happens to be a Sunday or holiday the payment must be made before noon on the next office day.

3. Should the purchaser fail to pay the balance of the purchase money within the time fixed, the sale will be cancelled, the deposit will be forfeited and the land may be again put up to auction. The defaulting purchaser will be liable for any deficiency in the amount realized by the re-sale, and in the calculation of such deficiency the deposit that has been forfeited shall not be reckoned. The defaulting purchaser at the first sale shall moreover have no claim to any surplus that may be realized by the re-sale.

4. Any amount due from a defaulting purchaser may be recovered under the rules or practice in force for the recovery of arrears of land revenue.

5. All sales and re-sales shall be subject to confirmation by the Superintendent of Coorg, who may order any sale or re-sale to be cancelled. The decision of the Superintendent is open to revision by the Chief Commissioner and may be modified or reversed by him. If within three months from the date of sale, the Superintendent shall not have reversed the sale or re-sale, the same shall be held to have been confirmed by him.

6. In any case in which a sale or re-sale may be cancelled, the purchaser will receive back the money or deposit paid by him, but will have no claims to interest or damages.

H. G. THOMSON,
Superintendent.

SEASON REPORTS FOR THE MONTH OF NOVEMBER 1880.

Shimoga District.

Rain-fall.—The rain-fall in the several taluks of the District during the month was as follows :—

	I.	C.		I.	C.
Shimoga	1	71	Sorab	1	45
Channagiri	2	64	Ságar	1	95
Honnali	1	43¾	Nagar	3	81
Shikarpur	0	62	Kavaledurga ..	2	7½

The average reading of the thermometer at Shimoga were 76·36 at 9-30 A. M. and 79·43 at 3-30 P. M.

Lands.—Lands assessed at Rs. 27—8—9 were taken up for cultivation during the month.

Cattle.—Murrain and foot and mouth disease very prevalent.

Prices.—Falling.

V. N. NARSIMMAIENGAR,
Dy. Commissioner.

Chitaldroog District.

Weather.— The weather was cloudy. Heavy rain fell in three taluks of the District. The quantity gauged in all the taluks was as follows :—

	Inches.	Cents.		Inches.	Cents.
Chitaldroog	7	27½	Hiriyur	4	71½
Davangere	2	5	Budihal	11	10
Kankuppa	3	22½	Hosdurga	9	45
Dodéri	2	70	Pavagada	3	10

The average reading of the thermometer at the District head-quarters was 72·30 at 9-30 A. M. and 74·73 at 3-30 P. M. The direction of the wind was north-east.

During the month 234 large and 537 small tanks received a fresh supply of water sufficient to last from 1 to 12 months. Fifteen tanks were breached, 14 in Budihal Taluk, and one in Hiriyur.

Crops.—The state of the crops in all the taluks was reported to be in good condition, except in certain parts of Chitaldroog, Davangere and Budihal where they partially suffered from excessive rain. The seeds sown were Bengal-gram, wheat, kurasani and white javari, while the crops harvested were javari, ragi, navane, sajje, harka, paddy, sáme and alasandi. The estimated out-turn is said to be from 8 to 12 annas in the rupee.

Lands.—Lands paying an assessment of Rs. 419—4—0 were newly taken up for cultivation during the month. No razinamas were tendered.

Cattle.—Cattle suffered from murrain, hoof rot and mouth diseases in the Taluks of Chitaldroog, Dodéri and Pavagada.

Health.—The health of the population was generally good. Fever, cough and cold were the diseases prevalent in some parts of the District.

Prices.—The markets were well supplied with food grains and the prices were —

Per Rupee.	Per Rupee.	Per Rupee.
Rice 12 to 15 seers.	Ragi 32 to 60 seers.	Javari 32 to 50 seers.

B. TIRUMALACHARI,
For Dy. Commissioner.

LOST—

The right half of the following Currency Note :—

No.	Circle.	Value.	Claimant.
B 62—92260	Madras.	Rs. 100	Mr. H. W. Taylor.

JUST PUBLISHED.

Super-royal, octavo, cloth.

Tribes of the Hindoo Koosh. *Price Rs.* 6 ; *packing and postage*, 6 *annas.*

Office of Superintendent of Government Printing, 8, Hastings Street, Calcutta.

Select Extra-Tropical Plants readily eligible for industrial culture or naturalization, with indications of their native countries and some of their uses, by Baron Ferd. Von Mueller. Indian edition, 1880. *Price Rs.* 4 ; *Packing and postage* 6 *annas.*

Office of Superintendent of Government Printing, 8, Hastings Street, Calcutta.

GOVERNMENT CINCHONA FEBRIFUGE.

This preparation is an efficient substitute for Quinine and can be purchased by Government officers, for public and charitable purposes, and by any one taking *twenty pounds* at a time, from the Superintendent, Botanical Garden, Calcutta, *for cash only*, at the following rates :—per four ounce tin *Rs.* 4, *ans.* 8 ; per eight ounce tin *Rs.* 8, *ans.* 8 ; per pound tin *Rs.* 16, *ans.* 8. The general public can be supplied by the Superintendent, Botanical Garden, *for cash only*, at the undernoted rates —per four ounce tin *Rs.* 5, *ans.* 8 ; per eight ounce tin *Rs.* 10 *ans.* 8 ; per pound tin *Rs.* 20. This medicine is also sold by the principal European and Native druggists in Calcutta. Postage eight annas per 4 and 8 oz. tin and twelve annas per pound tin, in addition to the foregoing rates.

Mysore Government Press, Bangalore.—1880.

THE
MYSORE GAZETTE.
Published by Authority.

BANGALORE, SATURDAY, DECEMBER 25, 1880.

☞ Separate paging is given to this Part in order that it may be filed as a separate compilation.

PART II.

Notifications by the Judicial Commissioner, &c.

JUDICIAL DEPARTMENT.

NOTIFICATIONS.

The 4th December 1880.

Notice is hereby given that the executors or administrators who have obtained probates or letters of administration in the matter of the estates mentioned below are hereby required under Section 277 of the Indian Succession Act, to exhibit in this Court, on or before the 18th January 1881, inventories and accounts of the said estates :—

Name of the Estate.	*Name of the Executor or Administrator.*	*Date of Grant.*
In the matter of the estate of Major-General Lousada Barrow.	John Alexander Boyson of the Firm of Messrs. Binny & Co., Madras.	11th June 1878.
Do Herbert Powys Drummond	Do do do	Do
Do Walter Green Aspinall.	Charlotte Ellen Aspinall Richard Hartwell James Charles McPherson Grant.	15th May 1880.
Do Arthur Hall.	Edward Hall of Anebadi Khari Estate in the Kadur District.	1st June 1880.

The 18th December 1880.

The undermentioned person has been enrolled as 2nd Grade Pleader in the Courts of Mysore, under the Rules of 18th February 1879 :—

207. Masti Narasimhachar .. Proposing to practise in the Courts of the Nundydroog Division.

The 20th December 1880.

The undermentioned person has been enrolled as 2nd Grade Pleader in the Courts of Coorg, under the Rules of 23rd December 1879 :—

17. M. Gundappa .. In the Courts of the Parpattegars and Subedars in Coorg.

The 21st December 1880.

The undermentioned gentleman has been enrolled as an Advocate in the Court of the Judicial Commissioner of Mysore, under the Rules of 18th February 1879 :—

Mr. Robert Talbot Tasker.

J. D. SANDFORD,
Judicial Commissioner.

INAM DEPARTMENT.

NOTIFICATIONS.

No. 10. *The 7th December* 1880.

Inamdars are hereby informed that 10 *ad-interim* certificates for whole villages and 475 *ad-interim* extracts for minor inams situated in the marginally noted taluks, were forwarded to the Deputy Commissioners of the Bangalore, Kolar, Hassan, Shimoga and Kadur Districts, on the 7th December 1880, for distribution.

Bangalore.	Shrinivaspur.	Attikuppa.
Hoskote.	Mulbagal.	Belur.
Dodballapur.	Gudibanda.	Chennaraypatna.
Nelamangala.	Sidlaghatta.	Narsipur.
Closepet.	Goribidnur.	Shimoga.
Anekal.	Hassan.	Sorab.
Betmangala.	Arkalgúd.	Múdgere.

They are accordingly to appear to receive the same on receipt of individual notices from the Amildars of the aforesaid taluks, who are hereby instructed to issue such notices without delay.

No. 11. *The 9th December* 1880.

Inamdars are hereby informed that 197 final title-deeds for whole inam villages and for minor inams situated in the marginally noted taluks, were forwarded to the Deputy Commissioners of the Bangalore, Túmkúr and Shimoga Districts, on the 9th December 1880, for distribution.

1. Bangalore.	5. Túmkúr.
2. Magadi.	6. Kunigal.
3. Nelamangala.	7. Maddagiri.
4. Closepet.	8. Shikarpur.

They are accordingly to appear to receive the same on receipt of individual notices from the Amildars of the aforesaid taluks, who are hereby instructed to issue such notices without delay.

The *ad-interim* certificates issued already for the above inam villages and minor inams are hereby declared to be cancelled.

R. A. COLE,
Supt. of Inam Settlements.

BANGALORE MUNICIPALITY.

BANGALORE CENSUS.

The 7th December 1880.

The President, Municipal Commission for the Cantonment and Town of Bangalore, notifies for general information that the General Census of the population of the Cantonment and Town of Bangalore, ordered by the Government of India, will be taken on the night of the 17th February 1881.

By Section 221 of the Bangalore Municipal Regulations it is ordered that any person wilfully neglecting or refusing correctly to fill up and affix his signature or mark to any such schedule or return so left at his place of residence, or who shall neglect or refuse to return the same to the Enumerator or other officer when called upon so to do, or to furnish the necessary information to an Enumerator to fill up the same for him if he do not know how to write, shall be liable to a penalty not exceeding two hundred rupees and may also be detained in custody until he shall have correctly filled up and signed, or affixed his mark to the said schedule or return: Provided that it shall be the duty of the Enumerator, if required, to fill up all schedules or returns for those who are unable to write. *Section* 222 inflicts a further fine not exceeding rupees one hundred on any person who does not properly amend his return, if required by the Enumerator.

The President relies upon the cordial co-operation of the inhabitants of the Cantonment and Town of Bangalore to ensure that the Census shall be really accurate.

J. H. OER,
President, Cantt. Munl. Commn.

513

TUMKUR DISTRICT.

The 7th December 1880.

NOTICE UNDER SECTION 354 OF THE CODE OF CIVIL PROCEDURE.

It is hereby declared that the undermentioned person is an insolvent and as such entitled to the benefit of the provisions of Chapter XX of the Code of Civil Procedure, and it is ordered that the said insolvent be and is hereby discharged from custody and from all liability to be arrested or imprisoned in respect of any of the debts mentioned in the schedule filed with records of the case concerned.

Sakoji Rao. .. In Insolvent Case No. 13 of 1880.

The 10th December 1880.

NOTICE UNDER SECTION 354 OF THE CODE OF CIVIL PROCEDURE.

It is hereby declared that the undermentioned person is an insolvent and as such entitled to the benefit of the provisions of Chapter XX of the Code of Civil Procedure, and it is ordered that the said insolvent be and is hereby discharged from custody and from all liability to be arrested or imprisoned in respect of any of the debts mentioned in the schedule filed with records of the case concerned.

Balé Nanjamma .. In Insolvent Case No. 17 of 1880.

E. CHITAMBRAM IYER,
Sub-Judge.

COORG.

IN THE COURT OF THE SUPERINTENDENT OF COORG.

Application No. 74 *of* 1880.

James Chisholm, ... Applicant.

In the matter of the estate of the late Mr. James Russell.

Whereas James Chisholm, one of the executors of the deceased above named, has applied to this Court for probate of the last will and testament of the said deceased who died on the 14th day of August 1880, and Wednesday the 2nd day of February 1881 at noon has been fixed for the hearing of the application—

All persons claiming to have any interest in the estate of the deceased are hereby called upon to come and see the proceedings on the said 2nd day of February 1881.

Given under my hand and the seal of the Court this 8th day of December 1880.

H. G. THOMSON,
Superintendent.

SEASON REPORTS FOR THE MONTH OF NOVEMBER 1880.

Bangalore District.

Rain-fall.—The rain was unusually excessive, and continued till the end of the month; and the total rain-fall as gauged at Head-quarters reached the abnormally high figure of 3·65 inches.

Crops.—The dry crops, particularly ragi, which were in a flourishing condition and ready for harvesting, suffered considerably from heavy and unseasonable rains, which have tended to diminish an anticipated abundant out-turn to some extent.

Health.—Generally good. Fever and ague prevailed in some of the taluks.

Mortality.—The deaths numbered 662 during the month of October against 821 in September 1880, being a decrease of 159.

Cattle.—Murrain continued to prevail in all the taluks of the District except Magadi, Closepet and Nelámangala; the number of deaths from this source was 1,457 against 1,274 in the previous month. The number of deaths from all causes amounted to 3,731, of these 94 were caused by wild beasts.

Lands.—Lands assessed at Rs. 179—15—11 were taken up for cultivation.

L. RICKETTS,
Dy. Commissioner.

Túmkúr District.

Rain.—The rain-fall throughout the District was as follows:—

	I.	C.		I.	C.
Túmkúr	3	25	Sira ..	1	94
Koratagere	5	5	Kunigal ..	6	50
Maddagiri	2	42	Kadaba ..	6	80
Chiknayakanhalli ..	5	0	Honnavalli ..	5	80

Weather.—Generally cloudy followed by rain.

Crops.—Paddy, Bengal-gram, javari, and wheat are being sown during the month. Ragi, sáme and paddy are being harvested.

Public Health—Good. The total number of deaths from all causes amounted to 481 in October against 529 in September.

Cattle.—Loss among cattle was 750 against 786 in October 1880.

Lands.—Lands yielding an assessment of Rs. 3,622—1—3 were taken up for cultivation, while none were relinquished.

Prices.—Rice, ragi, dál, ballar, horse-gram, wheat, ghee and jaggory were sold at 12 seers, and 7 chittaks, 38 S., 12 S., 29 S. 10 C., 39 S. 8 S., 10 C. 1 S., 11 C., and 6 S. 7 C., respectively, per rupee.

E. CHITAMBRAM IYER,
For Dy. Commissioner.

Mysore District.

Rain.—Heavy rain fell throughout the District. Average fall was 5 inches. Shimsha overflowed its banks and submerged some cultivated lands and damaged two villages, and some sheep were drowned. Maddur anicut and several tanks in Mandya Taluk damaged; where ragi crops were cut and lying on the ground some loss occurred from seed sprouting, but on the whole crops suffered very little.

Crops.—Prospects good. Bengal-gram was sown, and ragi, green and black-gram were harvested.

Health.—The public health has been good.

Cattle.—Three hundred and fifty-six head of cattle died from murrain and 1,261 from all other causes, or a total of 1,617 against 2,122 in last month.

Prices.—Almost stationary.

C. J. PEARSE,
Dy. Commissioner.

515

Coorg.

Wet Land.—The Kartika crop has been damaged by rain in some places, but is on the whole thriving and is nearly ripe in North Coorg. Ploughing for the Vaisakh crop still continues.

Ragi.—Ragi has been reaped and stacked, but is not yet threshed.

Cardamoms.—Cardamoms have been dried and a large portion of the crop has been disposed of.

Coffee.—Picking has commenced on all estates. The crop is much less than that of last year.

Mortality.—The number of deaths amongst the population of the Province in October was 304 against 215 in the same month of last year, and is classified as follows :—

Diarrhœa	..	21	*Taluks.*	
Small-pox	..	2	Mercara	41
Fever ..	..	272	Padinalknad	48
Accidents	..	1	Yedenalknad	36
Other Diseases	..	8	Kiggatnad	50
			Nanjarajpatna	36
			Yelsavirshime	75
			Towns.	
			Mahadeopet	9
			Virarajendrapet	9
	Total..	304	Total ..	304

Of the above, there were 99 males, 78 females and 127 children of the following sects :—
Christians 2 ; Coorgs 41 ; Hindus 220 ; Muhammadans 24 ; Other classes 17 ; Total 304.

Cattle.—The mortality amongst the cattle was 252 against 542 in the same month of last year, and is classified as follows :—
Bulls 67 ; cows 68 ; calves 49 ; he-buffaloes 18 ; she-buffaloes 22 ; calves 28 ; total 252.

Market-rates.—Stationary.

Rain-fall.—Mercara—

	Inches.	Cents.
In November 1880.. ..	5	80
Total Rain-fall	135	34

Somavarpet—

In November 1880 ..	6	55
Total Rain-fall	102	10

H. G. THOMSON,
Superintendent.

Abstract of Meteorological Reports received from Head-Quarters of Districts in the Province of Mysore, from 1st to 15th December 1880.

DISTRICT.	Thermometer. Averages for the half month. 9-30 A. M. Dry bulb.	Wet bulb.	Difference.	3-30 P. M. Dry bulb.	Wet bulb.	Difference.	Thermometer. Maximum.	Minimum.	Rain. Inches.	Cents.	Wind.
Kolar	73	...	...	75	...	...	77	66	...	19	N. E.
Túmkúr ...	74	66	8	76	68	8	87	64	1	3	N. E.
Mysore*... ...	...	...	...	...	...	...	...	...	...	...	...
Hassan	58	25	33	71	31	40	77	57	...	1	E.
Shimoga ...	73	...	...	77	...	...	...	...	...	...	N. E.
Kadur ...	72	69	...	72	70	...	77	62	1	23	N. E. & S. W.
Chitaldroog ...	71	...	...	75	...	...	...	...	...	15	N. E.

*Information not received.

NUNDYDROOG DIVISION.

NOTIFICATION.

The 23rd December 1880.

Sessions for the Túmkúr District will be held at Túmkúr on Monday the 10th day of January 1881 and following days —

The case mentioned below is posted for trial:—

Magisterial No.	Sessions No.	Names of Prisoner.	Name of the Committing Magistrate.	Sections charged under—	Date of Committal.
25 of 1880.	22	Venkataboyi ...	Mr. K. Seshadri Iyer, District Magistrate.	328, 392 and 302, I. P. C.	6th December 1880.

The Magistrate above named is hereby directed to cause all parties connected with the above noted case to be in attendance at Túmkúr before the Sessions Court on Monday the 10th day of January 1881, at 11 A. M. precisely.

2. All cases committed prior to that date will be taken up for trial in addition to the above.

T. R. A. THUMBOO CHETTY,
Sessions Judge.

BANGALORE DISTRICT.

The 21st December 1880.

Descriptive roll of a convict escaped on the 21st December 1880, from the gang of prisoners working at the Raja's Palace.

Jail No.—4985, *Name and Father's Name*—Kempa, son of Arasa, *Place of Residence*—Closepet Taluk, Chikka Sulkere, *Caste and Profession*—Irligar, Cultivator, *Age and Height*—33 years, 5 feet, 8 inches. *Crime, date and period of sentence*—Robbery, 23rd October 1880, 1 year and 3 months. *Awarding Court*—Closepet Sub-Division Officer and 1st Class Magistrate, Bangalore District. *Descriptive marks*—A small tumour on the right elbow, another on the right and the 3rd on left hip joint. A transverse scar on left arm, face pock marked. *Particulars of Jail Clothing, &c.*—1 cap, 1 half cumbly, 1 drawer and ½ fetters. *Remarks*—A reward of 25 rupees is offered for his recapture.

J. HENDERSON,
Superintendent.

BANGALORE MUNICIPALITY.

The 23rd December 1880.

Proceedings of a committee elected in para 5 of the Proceedings of the Town Municipal Commission dated 29th October 1880, held at their Office premises of the Town Municipal Commission at Taluk Cutcherry, on Sunday the 31st October 1880, at 8 A. M., for the purpose of selecting only such works as are most urgently required to be carried out during the ensuing official year 1881—82.

President.

Doctor J. H. Orr, C. B., *Present.*

Municipal Commissioners.

Present.—Mr. A. S. Raghavachar.
Mr. A. Srinivasachar.
Mr. P. Chengalraya Modaliar.

Present.—Mr. Doddi Venkataramana Shetti.
Mr. C. Muttusami Naidu.

List of proposed works for 1881—82.

The list of proposed works having been read and the committee having carefully inspected the list read to them for the purpose of selecting those most urgently required to be carried out during the official year 1881—82—

Resolved—That the following works be selected and the Municipal Executive Engineer be directed to submit detailed plans and estimates for the same for submission to the Municipal Commissioners at their next ordinary meeting convened to assemble on Tuesday the 30th November 1880.

List of Original Works proposed to be constructed during the official year 1881—82.

No.	Nature of Work.	Amount of Estimate.
	No. I Division.	Rs.
1	Gravelling the bund of Dharmambudhi Tank	820
2	Constructing V drain in No. I Division	1,000
3	Dismanlting Box drain and substituting a V Section drain in lieu of it, using the same materials in No. I Division	250
	No. II Division.	
4	Constructing V drain in No. II Division	1,000
5	Roofing the old clock tower in Vegetable Market	300
6	Do in Mandis in do	690
7	Erecting a wall round grazing ground, Barr lines	300
8	Metalling and gravelling Targupettah Main road	655
9	Do do Metkal lane..	470
	No. III Division.	
10	Constructing V drain in No. III Division	500
11	Do do in Cubbonpettah, 7th Lane	225
12	Do do 9th Lane	230
	No. IV Division.	
13	Widening Box drain along Nagartapettah Main road from Mariyamma's temple to Kama temple	1,140
	No. V Division.	
14	Constructing V drain in No. V Division	700
15	Erecting dust bins in Mavalli	140
	Total.. ..	8,420

List of Repair Works proposed to be carried out during the official year 1881—82.

No.	Nature of Work.	Amount.		
1	Roads and Drains	4,000	0	0
2	Markets	250	0	0
3	Pounds	150	0	0
4	Public Wells	50	0	0
5	Dust Bins	50	0	0
6	Latrines	200	0	0
7	Bandy Stands..	100	0	0
8	Miscellaneous..	200	0	0

The 23rd December 1880.

Copy of Proceedings of the Town Municipal Commission at a meeting held on Tuesday the 30th November 1880, at 7½ A. M.

President.

Dr. J. H. Orr, C. B., *Present.*

Ex-Officio Members.

Absent.—The Deputy Commissioner, Bangalore Dist.
The Executive Engineer, Nundydroog Divn.
The Commissary of Ordnance.
The Surgeon to the Mysore Commission.
The Amildar of Bangalore.

Municipal Commissioners.

1st Division, Balé Pettah.

Absent.—Mr. B. Murry Gungiah.
Mr. A. S. Raghavachar.

2nd Division, Manavarte Pettah.

Present.—Mr. A. Srinivasachar.
Mr. Khazi Abed Jaffar Sahib.

3rd Division, Alsur Pettah.

Present.—Mr. P. Changalraya Modaliar.
Mr. S. V. Annaiyappa Chetti.

4th Division, Nagarta Pettah.

Present.—Mr. B. Narayan Chetti.
Absent.—Mr. Doddi Venkatramana Chetti.

5th Division, Kalasi Palyam.

Present.—Mr. C. Muttusami Naidu.
Mr. M. Ramasami Chetti.

I. The usual monthly accounts for October 1880 are laid before the Board, read and duly passed.

Ordered.—That the following cash account be submitted to the Deputy Accountant General in Mysore.

Cash Account Current of the Municipal Commission for the Town of Bangalore for the month of October 1880.

Receipts.	Amount.			Expenditure.	Amount.		
Cash Balance brought forward from last month's account	380	2	2	I. Collection. 1. For octroi tax ...	226	3	1
I. Octroi. 2. Animals for slaughter ..	10	8	0	I. Collection. 2. Mohatarfa tax on houses, buildings and lands, and for tax on professions and trades	152	4	6
I. Octroi. 6. Tobacco, betel-leaf and betel-nuts ...	1,638	1	2	I. Collection. 7. Rents assigned to Municipality ...	20	8	0
I. Octroi. 7. Tax on dry and green cocoanuts ...	272	0	7	II. Head Office charges ...	409	12	1
II. Mohatarfa and Municipal taxes on houses, buildings or lands ...	277	2	10	III. Public Works. 1. Supervision ...	150	6	6
III. Mohatarfa tax on professions and trades	53	8	0	III. Public Works. 2. *a.* Original works ...	106	5	9
VII. Rents.—2. Nazul shops (Market) ...	244	8	0	III. Public Works. *b.* Purchase of land ...	20	0	0
IX. Extraordinary.— 5. Other Items. (Tobacco license) ..	5	8	0	III. Public Works. *c.* Compensation of house tax	60	0	0
X. Fines	6	1	8	III. Public Works. 3. Repairs ...	556	4	11
XI. Pounds	...	...	...	IV. Police	1,510	6	2
XII. Miscellaneous	83	0	0	VI. Charitable grants 2. Vaccination ...	20	8	0
XIII. Fees from liquor licenses ...	1,579	6	8	VII. Conservancy	772	2	0
				IX. Lighting	278	8	6
				X. Gardens ...	30	4	2
				XII. Miscellaneous. 2. Refund of excess collections	5	0	0
				XII. Miscellaneous. 3. Cattle Pound charges ...	16	7	9
				XII. Miscellaneous. 4. Statistics and mortuary registration ...	32	5	0
				XII. Miscellaneous. 5. Other miscellaneous items	108	15	8
				XIII. Extraordinary P. W. Reserve ...	1	0	0
				Total Rupees.....	4,477	6	1
				To Cash Balance carried to next month's accounts... ...	72	9	0
Grand Total Rs.....	4,549	15	1	Grand Total Rs.....	4,549	15	1

Mortuary Register, Bangalore.

Statement of Births and Deaths within the Town Municipal limits during the month of October 1880.

Causes of Death.	Europeans.		East Indians.		Musalmáns.		Hindus.		Native Christians.		Buddhists.		Other Classes.		Total.		Total in—		Difference.	
	M.	F.	M.	F.	M.	F.	M.	F.	M.	F.	M.	F.	M.	F.	M.	F.	Oct. 1880.	Sept. 1880.	Increase.	Decrease.
Cholera ...	...	...	...	...	...	...	...	...	...	...	...	...	...	...	...	...	...	...	...	...
Small-pox ...	...	...	...	...	...	...	...	...	...	...	...	...	...	...	...	...	...	...	...	...
Fevers ...	...	...	...	...	6	9	13	10	...	...	...	...	...	...	19	19	38	32	6	...
Bowel-complaints ...	...	...	...	...	1	...	1	1	...	...	...	...	...	...	2	1	3	4	...	1
Injuries. Suicide ...	...	...	...	...	...	...	...	...	...	...	...	...	...	...	...	...	...	...	...	...
Injuries. Wounding ...	...	...	...	...	...	...	...	...	...	...	...	...	...	...	...	...	...	...	...	...
Injuries. Accident ...	...	...	...	...	...	...	1	1	...	...	...	...	...	...	1	1	2	...	2	...
Injuries. Snake-bite or killed by wild beasts. ...	...	...	...	...	...	...	...	...	...	...	...	...	...	...	...	...	...	...	...	...
Other Causes—																				
Consumption ...	...	...	...	...	1	...	1	2	...	...	...	...	...	...	2	2	4	5	...	1
Convulsion ...	...	...	...	...	...	1	3	3	...	...	...	...	...	...	3	4	7	4	3	...
Dropsy ...	...	...	...	...	...	...	...	1	...	...	...	...	...	...	...	1	1	...	1	...
Lock-jaw ...	...	...	...	...	...	1	...	...	...	...	...	...	...	...	...	1	1	5	...	4
Asthma ...	...	...	...	...	...	...	...	1	...	...	...	...	...	...	...	1	1	...	1	...
Rheumatism ...	...	...	...	...	...	...	2	...	...	...	...	...	...	...	2	...	2	7	...	5
Old-age ...	...	...	...	...	...	...	2	1	...	...	...	...	...	...	2	1	3	4	...	1
Croup ...	...	...	...	...	...	...	5	3	...	...	...	...	...	...	5	3	8	10	...	2
Diarrhœa ...	...	...	...	...	...	...	...	1	...	...	...	...	...	...	...	1	1	...	1	...
Ulcer ...	...	...	...	...	...	...	1	1	...	...	...	...	...	...	1	1	2	...	2	...
Total Other Causes.....	...	...	...	...	1	2	14	13	...	...	...	...	...	...	15	15	30	35	8	13
Total Deaths.....	...	...	...	...	8	11	29	25	...	...	...	...	...	...	37	36	73	71	16	14
Total Number of Births.....	...	...	...	...	3	7	37	34	...	1	...	...	...	...	40	42	82	92	...	10

Abstract of Mortuary Report and Percentage of Births and Deaths on the estimated Population, 58,573.

Classes.	Births.		Difference.		Percentage of Births.		Deaths.		Difference.		Percentage of Deaths.	
	September 1880.	October 1880.	Increase.	Decrease.	September 1880.	October 1880.	September 1880.	October 1880.	Increase.	Decrease.	September 1880.	October 1880.
Europeans ...	...	...	...	...	...	...	...	...	...	...	...	...
East Indians ...	...	...	...	...	...	...	...	...	...	...	...	...
Musalmáns ...	16	10	...	6	·24	·15	14	19	5	...	·21	·29
Hindus ...	74	71	...	3	·14	·13	57	54	...	3	·11	·105
Native Christians	2	1	..	1	·307	·15	...	...	...	...	...	...
Buddhists ...	...	...	...	...	...	...	...	...	...	...	...	...
Other Classes ...	...	...	...	...	...	...	...	...	...	...	...	...
Total.....	92	82	...	10	·15	·14	71	73	5	3	·12	·12

REMARKS.

There were 73 deaths during the month, 38 from fever, 3 from bowel-complaints, 2 from injuries and 30 from other causes detailed in the previous page.

The number of deaths in October 1880, as compared with those of September 1880, are as follows:—

Of Musalmáns 19 against 14, Hindus 54 against 57, being 2 more than the previous month and 22 below the total number of deaths registered in the corresponding month of last year.

Age.

Classes.	Number died during the month.	Born dead.	Under 1 year.	2 to 5 years.	6 to 12 do	12 to 20 inclusive.	21 to 30 do	31 to 40 do	41 to 50 do	51 to 60 do	Above 60.	Total.
Europeans ...	...	...	...	...	...	...	...	...	...	...	...	...
East Indians ...	...	...	...	...	...	...	...	...	...	...	...	...
Musalmáns ...	19	...	7	1	1	1	3	...	1	1	4	19
Hindus ...	54	1	12	1	...	6	7	12	8	4	3	54
Native Christians ...	...	...	...	...	...	...	...	...	...	...	...	...
Buddhists ...	...	...	...	...	...	...	...	...	...	...	...	...
Other Classes ...	...	...	...	...	...	...	...	...	...	...	...	...
Total.....	73	1	19	2	1	7	10	12	9	5	7	73

Resolution.—Approved.

II. Read Sub-Committee's report on the budget works proposed to be carried out during the ensuing official year 1881—82.

Resolution.—That the Municipal Executive Engineer be directed to submit detailed plans and estimates of the works approved of and sanctioned by the committee, and that in accordance with Section 28 of the Bangalore Municipal Regulations of 1871, a draft budget be prepared shewing the estimated income and proposed expenditure of the Municipality for the year commencing from 1st April 1881, and that a printed copy of the same be furnished to each of the Municipal Commissioners as provided by the Regulations, published in the *Mysore Gazette*, at least seven days before the Ordinary Meeting of the Board in December 1880, before which the budget will be laid for final consideration.

Deferred Proposition.

III. Proceedings of the Chief Commissioner of Mysore, No. 3548-49—Ml. 187, dated 16th September 1880, sanctioning the estimate amounting to Rs. 1,660, for the construction of a fish and poulty market in the Pettah.

Resolution.—Sanctioned.

J. H. ORR,
President, Town Muni. Commn.

LOST—

The right half of the following Currency Note :—

No.	Circle.	Value.	Claimant.
B 62—92260	Madras.	Rs. 100	Mr. H. W. Taylor.

Mysore Government Press, Bangalore.—1880.

THE

MYSORE GAZETTE.

Published by Authority.

BANGALORE, SATURDAY, AUGUST 14, 1880.

☞ Separate paging is given to this Part in order that it may be filed as a separate compilation.

PART III.

Acts and Bills of the Governor General of India in Council, &c.

LEGISLATIVE DEPARTMENT.

A Bill to exempt certain persons and property from Municipal taxation.

Preamble.

WHEREAS it is expedient to empower the Governor General in Council to exempt from taxation certain persons and property in Municipalities; It is hereby enacted as follows:—

Power to exempt from taxation.

1. Notwithstanding anything contained in any enactment for the time being in force, the Governor General in Council may, by an order in writing, prohibit the levy by a Municipal Committee of any tax—

(*a*) on any person subject to the Army Discipline and Regulation Act, 1879, or the Indian Articles of War; or

(*b*) on any property of Her Majesty.

The Governor General in Council may by a like order rescind any such prohibition.

"Municipal Committee" defined.

2. In this Act "Municipal Committee" includes a Municipal Corporation or a body of Municipal Commissioners constituted by or under the provisions of any enactment for the time being in force.

STATEMENT OF OBJECTS AND REASONS.

By the twenty-fourth section of the Cantonments Act, 1880, the Governor General in Council is empowered to prohibit the levy of any tax in a cantonment, or to exempt any person or class of persons from the operation of any tax leviable there.

2. This power was conferred chiefly with a view to the exemption of military men in cantonments situate within the limits of municipalities from certain descriptions of municipal taxation. There are, however, cases in which, owing to the want of accommodation in cantonments or to some other cause, military men are compelled to reside within the limits of a municipality, but out of cantonments. In such cases the power in question is inapplicable; and it was accordingly proposed by the Select Committee on the Cantonment Bill that the defect should be supplied by a provision to be inserted in the Bill for the control of Municipal taxation, for the introduction of which leave had then been granted.

3. As, however, that Bill is not at present to be proceeded with, it has been thought desirable to make the necessary provisions in a separate Bill; and the present Bill has accordingly been prepared for this purpose.

4. The Bill also provides for the exemption of Government property from municipal taxation, recent experience having shewn such a power to be necessary.

Simla, the 27th May 1880.

C. GRANT.

Mysore Government Press, Bangalore.—1880.

THE
MYSORE GAZETTE.
Published by Authority.

BANGALORE, SATURDAY, AUGUST 21, 1880.

☞ Separate paging is given to this Part in order that it may be filed as a separate compilation.

PART III.

Acts and Bills of the Governor General of India in Council, &c.

LEGISLATIVE DEPARTMENT.

A Bill to exempt certain persons and property from Municipal taxation.

Preamble.

WHEREAS it is expedient to empower the Governor General in Council to exempt from taxation certain persons and property in Municipalities; It is hereby enacted as follows:—

Power to exempt from taxation.

1. Notwithstanding anything contained in any enactment for the time being in force, the Governor General in Council may, by an order in writing, prohibit the levy by a Municipal Committee of any tax—

(*a*) on any person subject to the Army Discipline and Regulation Act, 1879, or the Indian Articles of War; or

(*b*) on any property of Her Majesty.

The Governor General in Council may by a like order rescind any such prohibition.

"Municipal Committee" defined.

2. In this Act "Municipal Committee" includes a Municipal Corporation or a body of Municipal Commissioners constituted by or under the provisions of any enactment for the time being in force.

STATEMENT OF OBJECTS AND REASONS.

By the twenty-fourth section of the Cantonments Act, 1880, the Governor General in Council is empowered to prohibit the levy of any tax in a cantonment, or to exempt any person or class of persons from the operation of any tax leviable there.

2. This power was conferred chiefly with a view to the exemption of military men in cantonments situate within the limits of municipalities from certain descriptions of municipal taxation. There are, however, cases in which, owing to the want of accommodation in cantonments or to some other cause, military men are compelled to reside within the limits of a municipality, but out of cantonments. In such cases the power in question is inapplicable; and it was accordingly proposed by the Select Committee on the Cantonment Bill that the defect should be supplied by a provision to be inserted in the Bill for the control of Municipal taxation, for the introduction of which leave had then been granted.

3. As, however, that Bill is not at present to be proceeded with, it has been thought desirable to make the necessary provisions in a separate Bill; and the present Bill has accordingly been prepared for this purpose.

4. The Bill also provides for the exemption of Government property from municipal taxation, recent experience having shewn such a power to be necessary.

Simla, the 27th May 1880. C. GRANT.

Mysore Government Press, Bangalore.—1880.

THE
MYSORE GAZETTE.
Published by Authority.

BANGALORE, SATURDAY, AUGUST 28, 1880.

☞ Separate paging is given to this Part in order that it may be filed as a separate compilation.

PART III.

Acts and Bills of the Governor General of India in Council, &c.

LEGISLATIVE DEPARTMENT.

A Bill to exempt certain persons and property from Municipal taxation.

Preamble.

WHEREAS it is expedient to empower the Governor General in Council to exempt from taxation certain persons and property in Municipalities; It is hereby enacted as follows:—

Power to exempt from taxation.

1. Notwithstanding anything contained in any enactment for the time being in force, the Governor General in Council may, by an order in writing, prohibit the levy by a Municipal Committee of any tax—

(*a*) on any person subject to the Army Discipline and Regulation Act, 1879, or the Indian Articles of War; or

(*b*) on any property of Her Majesty.

The Governor General in Council may by a like order rescind any such prohibition.

"Municipal Committee" defined.

2. In this Act "Municipal Committee" includes a Municipal Corporation or a body of Municipal Commissioners constituted by or under the provisions of any enactment for the time being in force.

STATEMENT OF OBJECTS AND REASONS.

By the twenty-fourth section of the Cantonments Act, 1880, the Governor General in Council is empowered to prohibit the levy of any tax in a cantonment, or to exempt any person or class of persons from the operation of any tax leviable there.

2. This power was conferred chiefly with a view to the exemption of military men in cantonments situate within the limits of municipalities from certain descriptions of municipal taxation. There are, however, cases in which, owing to the want of accommodation in cantonments or to some other cause, military men are compelled to reside within the limits of a municipality, but out of cantonments. In such cases the power in question is inapplicable; and it was accordingly proposed by the Select Committee on the Cantonment Bill that the defect should be supplied by a provision to be inserted in the Bill for the control of Municipal taxation, for the introduction of which leave had then been granted.

3. As, however, that Bill is not at present to be proceeded with, it has been thought desirable to make the necessary provisions in a separate Bill; and the present Bill has accordingly been prepared for this purpose.

4. The Bill also provides for the exemption of Government property from municipal taxation, recent experience having shewn such a power to be necessary.

Simla, the 27th May 1880. C. GRANT.

Mysore Government Press, Bangalore.—1880.

THE
MYSORE GAZETTE.
Published by Authority.

BANGALORE, SATURDAY, SEPTEMBER 11, 1880.

☞ Separate paging is given to this Part in order that it may be filed as a separate compilation.

PART III.

Acts and Bills of the Governor General of India in Council, &c.

THE PETROLEUM BILL, 1880.

CONTENTS.

PREAMBLE.

Preliminary.

SECTIONS.
1. Short title.
   Commencement.
   Local extent.
2. Repeal of enactments.
3. Interpretation-clause.

First class and second class Petroleum.

4. Power to make rules as to the importation of first and second class petroleum.
5. Possession and transport of first and second class petroleum.
6. Power to make rules as to such possession and transport.

Dangerous Petroleum.

7. Dangerous petroleum in quantities exceeding 40 gallons.
   Application for license to import, transport or possess such petroleum.
   Power to grant license.
8. Dangerous petroleum in quantities not exceeding 40 gallons.
9. Application of sections 4 and 6.

Petroleum generally.

10. Vessels containing petroleum to be marked.
11. Power to inspect and require dealer to sell samples.
12. Notice to be given when officer proposes to test samples.
13. Certificate as to result of such testing.

SECTIONS.

Penalties.

14. Penalty for illegal importation, &c., of petroleum.
15. Penalty for keeping, &c., petroleum in contravention of section 10.
16. Penalty for refusing to comply with section 11.
17. Confiscation of petroleum.

Miscellaneous.

18. Rules when to have force of law.
19. Power to extend this Act to other substances.

THE SCHEDULE.

A Bill to Regulate the importation, possession and transport of Petroleum and other substances of a like nature.

Preamble.

WHEREAS it is expedient to regulate the importation, possession and transport of petroleum and other substances of a like nature; It is hereby enacted as follows:—

Preliminary.

Short title.
Committee's recommendations, para 1.

1. This Act may be called "The Petroleum Act, 1880"; and it shall come into force on the first day of January, 1881.

Commencement.

Local extent.

The provisions of this Act relating to—

(*a*) dangerous petroleum, and

(*b*) the importation of first class and second class petroleum,

extend to the whole of British India. The rest of this Act extends only to such local areas as the Local Government may, from time to time, by notification in the official Gazette, direct.

Repeal of enactments.

2. The Indian Ports Act, 1875, section thirty-seven, and Bengal Act No. III of 1865, (*to make better provision for the prevention of injury from fire in ports, and to provide for the safe keeping of inflammable oils in ports and places within the Provinces under the control of the Lieutenant-Governor of Bengal*) are hereby repealed.

Interpretation-clause.

3. In this Act, unless there is something repugnant in the subject or context,—

34 and 35 Vic., c. 105, s. 3, with additions from Committee's report.
"Petroleum."

"Petroleum." includes also the liquids commonly known by the names of rock oil, Rangoon oil, Burma oil, kerosine, paraffine oil, mineral oil, petroline, gasoline, benzol, benzoline, benzine and any inflammable liquid that is made from petroleum, coal, schist, shale, peat or any other bituminous substance or from any products of petroleum.

Committee's recommendations, para 3.

But does not include any oil ordinarily used for lubricating purposes, and having its flashing point at or above two hundred and fifty degrees of Fahrenheit's thermometer.

Explanation.—The flashing point of petroleum means the lowest temperature at which the petroleum yields a vapour which will furnish a momentary flash or flame when tested with the apparatus and in the manner described in the Schedule hereto annexed.

Committee's recommendations, para. 4.

"First class petroleum" means petroleum having its flashing point at or above one hundred and three degrees of Fahrenheit's thermometer:

Committee's recommendations, para. 6.
"First class petroleum."

"Second class petroleum" means petroleum having its flashing point at or above eighty-three, but below one hundred and three, degrees of Fahrenheit's thermometer:

"Second class petroleum."

"Dangerous petroleum" means petroleum having its flashing point below eighty-three degrees of Fahrenheit's thermometer:

"Dangerous petroleum."

"Import" means to bring into British India by sea or land;

"Import."

and "importation" means the bringing into British India as aforesaid.

"Transport" means to remove from one place to another within British India;

"Transport."

"Ship" includes anything made for the conveyance by water of human beings or property;

"Ship."

"Master" includes every person (except a Pilot or Harbour Master) having for the time being the charge or control of a ship;

"Master."

"Magistrate" means, in the Presidency-towns, a Presidency Magistrate, and elsewhere a Magistrate of the first class or (when specially empowered by the Local Government to try cases under this Act) a Magistrate of the second class: and

"Magistrate."

"Owner" includes also any agent to whom a ship is consigned.

"Owner."

First class and second class petroleum.

4. The Local Government may, from time to time, make rules to regulate the importation of first class petroleum and second class petroleum; and in particular—

Committee's recommendations, paras 12 to 20.
Power to make rules as to the importation of first and second class petroleum.

(*a*) for ascertaining the quantity and description of any such petroleum on board a ship.

(*b*) to provide for the delivery by the master of a ship of samples of such petroleum and for the testing thereof before such petroleum is landed from such ship;

(*c*) to determine the places at which only such petroleum may be landed; and

(*d*) to regulate the time and mode of, and the precautions to be taken on, landing or transhipping any such petroleum.

5. No quantity of first class petroleum exceeding five hundred gallons, and

Possession and transport of first and second class petroleum.

no quantity of second class petroleum exceeding forty gallons,

shall be kept by any one person or on the same premises or shall be transported except under and in accordance with the conditions of a license granted under this Act.

6. The Local Government may from time to time make rules as to the granting of licenses to possess or transport first and second class petroleum in cases where such licenses are by law required.

Power to make rules as to such possession and transport.

Such rules may provide for the following among other matters, that is to say :—

in the case of licenses to possess petroleum—

(*a*) the nature and situation of the premises for which they may be granted, and

(*b*) the inspection of licensed premises and the testing of petroleum found thereon ;

in the case of licenses to transport petroleum—

(*c*) the manner in which such petroleum shall be packed, the mode of transit, and the route by which it is to be taken, and

(*d*) the stoppage and inspection of it during transit ;

in the case of both such licenses—

(*e*) the authority by which the license may be granted ;

(*f*) the fee to be charged for it ;

(*g*) the quantity of petroleum it is to cover ;

(*h*) the conditions which may be inserted in it ;

(*j*) the time during which it is to continue in force ; and

(*k*) the renewal of the license.

Dangerous Petroleum.

7. No quantity of dangerous petroleum exceeding forty gallons shall be imported or transported, or kept by any one person or on the same premises, except under, and in accordance with the conditions of, a license from the Local Government granted as next hereinafter provided.

Dangerous petroleum in quantities exceeding 40 gallons.

Every application for such a license shall be in writing, and shall declare—

Application for license to import, transport or possess such petroleum.

(*a*) the quantity of such petroleum which it is desired to import, transport or possess as the case may be ;

(*b*) the purpose for which the applicant believes that such petroleum will be used ; and

(*c*) that petroleum other than dangerous petroleum cannot be used for such purpose.

If the Local Government sees reason to believe that such petroleum will be used for such purpose and that no petroleum other than dangerous petroleum can be used for such purpose, it may grant such license for the importation, transport or possession (as the case may be) of such petroleum, absolutely or subject to such conditions as it thinks fit.

Power to grant License.

8. No quantity of dangerous petroleum equal to or less than forty gallons shall be kept or transported without a license;

Dangerous petroleum in quantities not exceeding 40 gallons.

Provided that nothing in this section shall apply in any case when the quantity of such petroleum kept by any one person or on the same premises or transported does not exceed three gallons and such petroleum is placed in separate glass, earthenware or metal vessels each of which contains not more than a pint and is securely stopped.

34 and 35 Vic., c. 105, s. 8.

9. Except as hereinbefore provided, the provisions contained in sections four and six in respect of first and second class petroleum shall apply also to dangerous petroleum.

Applications of sections 4 and 6.

Petroleum generally.

10. All petroleum—

34 and 35, Vic., c. 105, s. 6.
Vessels containing petroleum to be marked.

(*a*) which is kept at any place after seven days from the date on which it is imported,

(*b*) which is transported, or

(*c*) which is sold or exposed for sale,

shall be contained in vessels which shall bear an indelible mark or label in conspicuous characters stating what description of petroleum herein specified the same is.

Cf. Act I of 1878, s. 9.

11. Any officer specially authorized in this behalf by the Local Government may require any dealer in petroleum to shew him any place, and any of the vessels, in which any petroleum in his possession is stored or contained, to give him such assistance as he may require for examining the same and to deliver to him samples of such petroleum on payment of the value of such samples.

34 and 35 Vic., c. 105, s. 11.
Power to inspect and require dealer to sell samples.

12. When any such officer has, in exercise of the powers conferred by section eleven, or by purchase, obtained a sample of petroleum in the possession of a dealer, he may give a notice in writing to such dealer informing him that he is about to test such sample or cause the same to be tested with the apparatus and in the manner described in the Schedule hereto annexed, at a time and place to be fixed in such notice, and that such person or his Agent may be present at such testing.

Ibid.
Notice to be given when officer proposes to test samples.

13. On any such testing, if it appears to the officer or other person so testing that the petroleum from which such sample has been taken is first class, second class or dangerous petroleum, such officer or other person may certify such fact, and the certificate so given shall be receivable as evidence in any proceedings which may be taken under this Act against the dealer in whose possession such petroleum was found; and shall be *primâ facie* proof of the fact stated therein.

Ibid.
Certificate as to result of such testing.

Penalties.

Penalty for illegal importation, &c., of petroleum.

14. Any person who, in contravention of this Act or of any rules made hereunder, imports, possesses or transports any petroleum, and any person who otherwise contravenes any such rules or any condition contained in a license granted hereunder, shall be punished with imprisonment for a term which may extend to three months, or with fine which may extend to one thousand rupees, or with both.

34 and 35 Vic., c. 105, s. 63.
Penalty for keeping, transporting or exposing for sale petroleum in contravention of section 10.

15. Any person keeping, transporting, selling or exposing for sale petroleum in vessels not marked as prescribed by section ten shall be punished with fine which may extend to fifty rupees.

34 and 35 Vic., c. 105, s. 12.
Penalty for refusing to comply with section 11.

16. Any dealer in petroleum who refuses or neglects to shew to any officer authorized under section eleven any place, or any of the vessels, in which petroleum in his possession is stored or contained, or to give him such assistance as he may require for examining the same, or to give him samples of such petroleum on payment of the value of such samples, shall be punished with fine which may extend to two hundred rupees.

Cf. Act I of 1878, s. 11.
Confiscation of petroleum.

17. In any case in which an offence under section fourteen or section fifteen has been committed, the convicting Magistrate may direct that—

(*a*) the petroleum in respect of which the offence has been committed, or

(*b*) where the offender is importing or transporting or is in possession of any petroleum exceeding the quantity (if any) which he is permitted to import, transport or possess, as the case may be, the whole of the petroleum which he is importing or transporting, or is in possession of,

shall be confiscated.

Miscellaneous.

Rules when to have force of law.

18. All rules made by the Local Government under this Act shall be published in the official Gazette, and shall thereupon, so far as they are consistent with this Act, have the force of law:

Provided that no such rule shall be so published without the previous sanction of the Governor General in Council.

34 and 35 Vic., c. 105, s. 14.
Power to extend this Act to other substances.

19. The Governor General in Council may, from time to time, by notification in the *Gazette of India*, extend the whole or any portion of this Act to any inflammable substance other than petroleum, and may by such notification fix, in substitution for the quantities of petroleum fixed by sections five, seven and eight, the quantities of such substance to which these sections shall apply.

The Governor General in Council may by a like notification cancel any notification issued under this section.

THE SCHEDULE.

Specification explanatory of the Test Apparatus.

The following is a description of the details of the apparatus:—

Committee's recommendations, para 5, and 42 and 43 Vic., c. 47.

The oil cup consists of a cylindrical vessel 2″ diameter, $2\frac{2}{10}$″ height (internal), with outward projecting rim $\frac{5}{10}$″ wide, $\frac{3}{8}$″ from the top and $1\frac{7}{8}$″ from the bottom of the cup. It is made of gun metal or brass (17 B. W. G.), tinned inside. A bracket, consisting of a short stout piece of wire, bent upwards and terminating in a point, is fixed to the inside of the cup to serve as a gauge. The distance of the point from the bottom of the cup is $1\frac{1}{2}$″. The cup is provided with a closefitting overlapping cover made of brass (22 B. W. G.) which carries the thermometer and test lamp. The latter is suspended from two supports from the side by means of trunnions, upon which it may be made to oscillate; it is provided with a spout the mouth of which is $\frac{1}{16}$″ in diameter. The socket which is to hold the thermometer is fixed at such an angle, and its length is so adjusted, that the bulb of the thermometer, when inserted to its full depth, shall be $1\frac{1}{2}$″ below the centre of the lid.

The cover is provided with three square holes, one in the centre $\frac{5}{10}$″ by $\frac{4}{10}$″, and two smaller ones, $\frac{3}{10}$″ by $\frac{2}{10}$″, close to the sides and opposite each other. These three holes may be closed and uncovered by means of a slide moving in grooves, and having perforations corresponding to those on the lid.

In moving the slide so as to uncover the holes, the oscillating lamp is caught by a pin fixed in the slide, and tilted in such a way as to bring the end of the spout just below the surface of the lid. Upon the slide being pushed back so as to cover the holes, the lamp returns to its original position.

Upon the cover, in front of, and in line with, the mouth of the lamp, is fixed a white bead the dimensions of which represent the size of the test flame to be used.

The bath or heated vessel consists of two flat-bottomed copper cylinders (24 B. W. G.), an inner one of 3″ diameter and $2\frac{1}{2}$″ height, and an outer one of $5\frac{1}{2}$″ diameter and $5\frac{3}{4}$″ height; they are soldered to a circular copper plate (20 B. W. G.) perforated in the centre, which forms the top of the bath, in such a manner as to inclose the space between the two cylinders, but leaving access to the inner cylinder. The top of the bath projects both outwards and inwards about $\frac{3}{8}$″, that is, its diameter is about $\frac{6}{8}$″ greater than that of the body of the bath, while the diameter of the circular opening in the centre is about the same amount less than that of the inner copper cylinder. To the inner projection of the top is fastened, by six small screws, a flat ring of ebonite, the screws being sunk below the surface of the ebonite to avoid metallic contact between the bath and the oil cup. The exact distance between the sides and bottom of the bath of the oil lamp is $1\frac{1}{2}$″. A split socket similar to that on the cover of the oil cup, but set at a right angle, allows a thermometer to be inserted into the space between the two cylinders. The bath is further provided with a funnel, an overflow pipe, and two loop handles.

The bath rests upon a cast-iron tripod stand, to the ring of which is attached a copper cylinder or jacket (24 B. W. G.), flanged at the top, and of such dimensions that the bath, while firmly resting on the iron ring, just touches with its projecting top the inward-turned flange. The diameter of this outer jacket is $6\frac{1}{2}$″. One of the three legs of the stand serves as support for the spirit lamp, attached to it by means of a small swing bracket. The distance of the wick holder from the bottom of the bath is 1″.

Two thermometers are provided with the apparatus, the one for ascertaining the temperature of the bath, the other for determining the flashing point. The thermometer

for ascertaining the temperature of the water has a long bulb and a space at the top. Its range is from about 90° to 190° Fahrenheit. The scale (in degrees of Fahrenheit) is marked on an ivory back fastened to the tube in the usual way; it is fitted with a metal collar fitting the socket, and the part of the tube below the scale should have a length of about 3½″ measured from the lower end of the scale to the end of the bulb. The thermometer for ascertaining the temperature of the oil is fitted with collar and ivory scale in a similar manner to the one described. It has a round bulb, a space at the top, and ranges from about 55° F. to 150° F.; it measures from end of ivory back to bulb 2¼.″

Directions for applying the Test.

1. The test apparatus is to be placed for use in a position where it is not exposed to currents of air or draughts.

2. The heating vessel or water-bath is filled by pouring water into the funnel until it begins to flow out at the spout of the vessel. The temperature of the water at the commencement of the test is to be 130° Fahrenheit, and this is attained in the first instance, either by mixing hot and cold water in the bath, or in a vessel from which the bath is filled, until the thermometer which is provided for testing the temperature of the water gives the proper indication; or by heating the water with the spirit lamp (which is attached to the stand of the apparatus) until the required temperature is indicated.

If the water has been heated too highly, it is easily reduced to 130° by pouring in cold water little by little (to replace a portion of the warm water) until the thermometer gives the proper reading.

When a test has been completed, this water-bath is again raised to 130° by placing the lamp underneath, and the result is readily obtained while the petroleum cup is being emptied, cooled, and refilled with a fresh sample to be tested. The lamp is then turned on its swivel from under the apparatus, and the next test is proceeded with.

3. The test lamp is prepared for use by fitting it with a piece of flat plaited candle-wick, and filling it with colza or rape oil up to the lower edge of the opening of the spout or wick tube. The lamp is trimmed so that when lighted it gives a flame of about 0·15 of an inch diameter, and this size of flame which is represented by the projecting white bead on the cover of the oil cup is readily maintained by simple manipulation from time to time with a small wire trimmer.

When gas is available it may be conveniently used in place of the little oil lamp, and for this purpose a test flame arrangement for use with gas may be substituted for the lamp.

4. The bath having been raised to the proper temperature, the oil to be tested is introduced into the petroleum cup, being poured in slowly until the level of the liquid just reaches the point of the gauge which is fixed in the cup. In warm weather the temperature of the room in which the samples to be tested have been kept should be observed in the first instance, and if it exceeds 65°, the samples to be tested should be cooled down (to about 60°) by immersing the bottle containing them in cold water, or by any other convenient method. The lid of the cup, with the slide closed, is then put on, and the cup is put into the bath or heating vessel. The thermometer in the lid of the cup has been adjusted so as to have its bulb just immersed in the liquid, and its position is not under any circumstances to be altered. When the cup has been placed in the proper position, the scale of the thermometer faces the operator.

NOTE.—A model apparatus is deposited at the office of the Master of the Mint, Calcutta.

5. The test lamp is then placed in position upon the lid of the cup, the lead line or pendulum,* which has been fixed in a convenient position in front of the operator, is set in motion, and the rise of the thermometer in the petroleum cup is watched. When the temperature has reached about 66°, the operation of testing is to be commenced, the test flame being applied once for every rise of one degree in the following manner:—

The slide is slowly drawn open while the pendulum performs three oscillations, and is closed during the fourth oscillation.

NOTE.—If it is desired to employ the test apparatus to determine the flashing points of oils of very low volatility, the mode of proceeding is to be modified as follows:—

The air chamber which surrounds the cup is filled with cold water, to a depth of $1\frac{1}{2}$ inches, and the heating vessel or water-bath is filled as usual, but also with cold water. The lamp is then placed under the apparatus and kept there during the entire operation. If a very heavy oil is being dealt with, the operation may be commenced with water previously heated to 120°, instead of with cold water.

STATEMENT OF OBJECTS AND REASONS.

FOR some time past the dangerous nature of the inflammable oils which are being imported into this country has been engaging the attention of Government. In November, 1878, the notice of the Government of India was first drawn to the subject by the Government of Bombay, with a view, if necessary, to legislation being resorted to to check the importation of dangerous oils. On a reference being made to the Government of Bengal as to the expediency of such legislation, it was found that the subject had already been for some time before that Government, and that a Committee had been appointed for the purpose of considering the question of these oils in all its bearings. This Committee, which was composed of officials, experts and gentlemen interested in the trade, has presented its report, in which it strongly urges the necessity for legislation, and puts forward certain recommendations as to the lines on which in its opinion such legislation should proceed.

2. These recommendations follow, with certain modifications, introduced to meet the special circumstances, climatic and otherwise, of India, the outlines of 34 & 35 Vic., cap. 105 (since amended by 42 & 43 Vic., cap. 47), which is the principal Act governing this subject in the United Kingdom. They appear well adapted to carry out the object which the Committee had in view, namely, practical security of life and property, with the minimum of restrictions on an important and rapidly developing trade.

3. The following is the general substance of the conclusions of the Committee:—

1*st*.—All petroleum should be divided into three classes, namely,—

(*a*) first class petroleum with a flashing point at or above 103° F.;
(*b*) second class petroleum with a flashing point between 83° and 103° F.;
(*c*) dangerous petroleum with a flashing point below 83° F.

} According to Abel's close test.

2*ndly*.—All petroleum should be tested by Abel's close test, which has recently been adopted in the United Kingdom (see 42 & 43 Vic., cap 47, the Petroleum Act, 1879), for the purposes of the Petroleum Act, 1871, in preference to the old or open test which was fixed by that Act.

3*rdly*.—As second class petroleum flashes only at a temperature of 83°, or 10° higher than the temperature (73°) at which petroleum is considered safe enough to be exempted

* This pendulum is two (2) feet in length from the point of suspension to the centre of gravity of the weight.

from the provisions of the English Petroleum Act (see 42 & 43 Vic., cap, 47), and may therefore be regarded as at all events fairly safe, the importation, storage and transport of such petroleum, as well as of first class petroleum, should be left reasonably free, while the importation, storage and transport of dangerous petroleum, if not actually prohibited, should be subjected to such severe restrictions as practically to be so for purposes of ordinary use.

4. The Government of India has considered this report, and is disposed to concur generally in its conclusions and in the scheme of legislation contained in the Committee's recommendations. As the Government of Madras and the Chief Commissioner of Burma, as well as the Governments of Bombay and Bengal, are in favor of legislation, the Government of India is willing to accept the recommendation of the Committee that the legislation to be undertaken should be in the Council of the Governor General, and accordingly the present Bill, which embodies generally the recommendations of the Committee, has been prepared.

5. As it seems desirable to check at once and generally, the trade in dangerous petroleum (and it would be unfair if all ports were not put on the same footing as to the importation of first class and second class petroleum), the provisions of the Bill relating to dangerous petroleum and the importation of first class and second class petroleum are made to extend to the whole of India; but its other provisions are only applicable at the discretion of the Local Government.

The details of the measure have been left in a great measure to rules to be framed by the Local Government, with the sanction of the Governor General in Council, as this seems the most convenient course in a case of this sort, where the local circumstances and peculiar features of the trade of various places have to be considered.

6. A section has been added to the Bill corresponding with section 14 of 34 & 35 Vic., cap. 105, enabling the Governor General in Council hereafter to extend the Act to substances other than petroleum, and to adapt certain of the provisions of the Act to the case of such substances.

7. The length of the pendulum which was by an oversight omitted from the description of Professor Abel's test in the first schedule to the 42 & 43 Vic., cap. 47, has been inserted in a foot-note to the schedule of the Bill on information furnished by Mr. Pedler.

8. The opportunity has been taken to repeal the thirty-seventh section of the Indian Ports Act relating to inflammable oils, and Bengal Act, No. III of 1865, which regulates in Calcutta and Howrah the importation and storage of inflammable oils, as the present Bill will make those enactments unnecessary.

The 3rd July 1880. WHITLEY STOKES.

Mysore Govt. Press, Bangalore.—1880.

THE
MYSORE GAZETTE.
Published by Authority.

BANGALORE, SATURDAY, SEPTEMBER 18, 1880.

☞ Separate paging is given to this Part in order that it may be filed as a separate compilation.

PART III.

Acts and Bills of the Governor General of India in Council, &c.

THE PETROLEUM BILL, 1880.

CONTENTS.

PREAMBLE.

Preliminary.

SECTIONS.
1. Short title
   Commencement.
   Local extent.
2. Repeal of enactments.
3. Interpretation-clause.

First class and second class Petroleum.

4. Power to make rules as to the importation of first and second class petroleum.
5. Possession and transport of first and second class petroleum.
6. Power to make rules as to such possession and transport.

Dangerous Petroleum.

7. Dangerous petroleum in quantities exceeding 40 gallons.
   Application for license to import, transport or possess such petroleum.
   Power to grant license.
8. Dangerous petroleum in quantities not exceeding 40 gallons.
9. Application of sections 4 and 6.

Petroleum generally.

10. Vessels containing petroleum to be marked.
11. Power to inspect and require dealer to sell samples.
12. Notice to be given when officer proposes to test samples.
13. Certificate as to result of such testing.

SECTIONS.

Penalties.

14. Penalty for illegal importation, &c., of petroleum
15. Penalty for keeping, &c., petroleum in contravention of section 10.
16. Penalty for refusing to comply with section 11.
17. Confiscation of petroleum.

Miscellaneous.

18. Rules when to have force of law.
19. Power to extend this Act to other substances.

THE SCHEDULE.

A Bill to Regulate the importation, possession and transport of Petroleum and other substances of a like nature.

WHEREAS it is expedient to regulate the importation, possession and transport of petroleum and other substances of a like nature; It is hereby enacted as follows:—

Preamble.

Preliminary.

1. This Act may be called "The Petroleum Act, 1880"; and it shall come into force on the first day of January, 1881.

Short title.
Committee's recommendations, para 1.
Commencement.

The provisions of this Act relating to—

Local extent.

(*a*) dangerous petroleum, and

(*b*) the importation of first class and second class petroleum,

extend to the whole of British India. The rest of this Act extends only to such local areas as the Local Government may, from time to time, by notification in the official Gazette, direct.

2. The Indian Ports Act, 1875, section thirty-seven, and Bengal Act No. III of 1865, (*to make better provision for the prevention of injury from fire in ports, and to provide for the safe keeping of inflammable oils in ports and places within the Provinces under the control of the Lieutenant-Governor of Bengal*) are hereby repealed.

Repeal of enactments.

3. In this Act, unless there is something repugnant in the subject or context,—

Interpretation-clause.

"Petroleum" includes also the liquids commonly known by the names of rock oil, Rangoon oil, Burma oil, kerosine, paraffine oil, mineral oil, petroline, gasoline, benzol, benzoline, benzine and any inflammable liquid that is made from petroleum, coal, schist, shale, peat or any other bituminous substance or from any products of petroleum.

34 and 35 Vic., c. 105, s. 3, with additions from Committee's report.
"Petroleum."

But does not include any oil ordinarily used for lubricating purposes, and having its flashing point at or above two hundred and fifty degrees of Fahrenheit's thermometer.

Committee's recommendations, para 3.

Explanation.—The flashing point of petroleum means the lowest temperature at which the petroleum yields a vapour which will furnish a momentary flash or flame when tested with the apparatus and in the manner described in the Schedule hereto annexed.

Committee's recommendations, para. 4.

"First class petroleum" means petroleum having its flashing point at or above one hundred and three degrees of Fahrenheit's thermometer:

Committee's recommendations, para. 6.
"First class petroleum."

"Second class petroleum" means petroleum having its flashing point at or above eighty-three, but below one hundred and three, degrees of Fahrenheit's thermometer:

"Second class petroleum."

"Dangerous petroleum" means petroleum having its flashing point below eighty-three degrees of Fahrenheit's thermometer:

"Dangerous petroleum."

"Import" means to bring into British India by sea or land;

"Import."

and "importation" means the bringing into British India as aforesaid.

"Transport" means to remove from one place to another within British India;

"Transport."

"Ship" includes anything made for the conveyance by water of human beings or property;

"Ship."

"Master" includes every person (except a Pilot or Harbour Master) having for the time being the charge or control of a ship;

"Master."

"Magistrate" means, in the Presidency-towns, a Presidency Magistrate, and elsewhere a Magistrate of the first class or (when specially empowered by the Local Government to try cases under this Act) a Magistrate of the second class: and

"Magistrate."

"Owner" includes also any agent to whom a ship is consigned.

"Owner."

First class and second class petroleum.

4. The Local Government may, from time to time, make rules to regulate the importation of first class petroleum and second class petroleum; and in particular—

Committee's recommendations, paras 12 to 20.
Power to make rules as to the importation of first and second class petroleum.

(*a*) for ascertaining the quantity and description of any such petroleum on board a ship.

(*b*) to provide for the delivery by the master of a ship of samples of such petroleum and for the testing thereof before such petroleum is landed from such ship;

(*c*) to determine the places at which only such petroleum may be landed; and

(*d*) to regulate the time and mode of, and the precautions to be taken on, landing or transhipping any such petroleum.

5. No quantity of first class petroleum exceeding five hundred gallons, and

Possession and transport of first and second class petroleum.

no quantity of second class petroleum exceeding forty gallons,

shall be kept by any one person or on the same premises or shall be transported except under and in accordance with the conditions of a license granted under this Act.

6. The Local Government may from time to time make rules as to the granting of licenses to possess or transport first and second class petroleum in cases where such licenses are by law required.

Power to make rules as to such possession and transport.

Such rules may provide for the following among other matters, that is to say :—

in the case of licenses to possess petroleum—

(*a*) the nature and situation of the premises for which they may be granted, and

(*b*) the inspection of licensed premises and the testing of petroleum found thereon ;

in the case of licenses to transport petroleum—

(*c*) the manner in which such petroleum shall be packed, the mode of transit, and the route by which it is to be taken, and

(*d*) the stoppage and inspection of it during transit ;

in the case of both such licenses—

(*e*) the authority by which the license may be granted ;

(*f*) the fee to be charged for it ;

(*g*) the quantity of petroleum it is to cover ;

(*h*) the conditions which may be inserted in it ;

(*j*) the time during which it is to continue in force ; and

(*k*) the renewal of the license.

Dangerous Petroleum.

7. No quantity of dangerous petroleum exceeding forty gallons shall be imported or transported, or kept by any one person or on the same premises, except under, and in accordance with the conditions of, a license from the Local Government granted as next hereinafter provided.

Dangerous petroleum in quantities exceeding 40 gallons.

Every application for such a license shall be in writing, and shall declare—

Application for license to import, transport or possess such petroleum.

(*a*) the quantity of such petroleum which it is desired to import, transport or possess as the case may be ;

(*b*) the purpose for which the applicant believes that such petroleum will be used ; and

(*c*) that petroleum other than dangerous petroleum cannot be used for such purpose.

If the Local Government sees reason to believe that such petroleum will be used for such purpose and that no petroleum other than dangerous petroleum can be used for such purpose, it may grant such license for the importation, transport or possession (as the case may be) of such petroleum, absolutely or subject to such conditions as it thinks fit.

Power to grant License.

8. No quantity of dangerous petroleum equal to or less than forty gallons shall be kept or transported without a license;

Dangerous petroleum in quantities not exceeding 40 gallons.

Provided that nothing in this section shall apply in any case when the quantity of such petroleum kept by any one person or on the same premises or transported does not exceed three gallons and such petroleum is placed in separate glass, earthenware or metal vessels each of which contains not more than a pint and is securely stopped.

34 and 35 Vic., c. 105, s. 8.

9. Except as hereinbefore provided, the provisions contained in sections four and six in respect of first and second class petroleum shall apply also to dangerous petroleum.

Applications of sections 4 and 6.

Petroleum generally.

10. All petroleum—

34 and 35, Vic., c. 105, s. 6.
Vessels containing petroleum to be marked.

(*a*) which is kept at any place after seven days from the date on which it is imported,

(*b*) which is transported, or

(*c*) which is sold or exposed for sale,

shall be contained in vessels which shall bear an indelible mark or label in conspicuous characters stating what description of petroleum herein specified the same is.

Cf. Act I of 1878, s. 9.

11. Any officer specially authorized in this behalf by the Local Government may require any dealer in petroleum to shew him any place, and any of the vessels, in which any petroleum in his possession is stored or contained, to give him such assistance as he may require for examining the same and to deliver to him samples of such petroleum on payment of the value of such samples.

34 and 35 Vic., c. 105, s. 11.
Power to inspect and require dealer to sell samples.

12. When any such officer has, in exercise of the powers conferred by section eleven, or by purchase, obtained a sample of petroleum in the possession of a dealer, he may give a notice in writing to such dealer informing him that he is about to test such sample or cause the same to be tested with the apparatus and in the manner described in the Schedule hereto annexed, at a time and place to be fixed in such notice, and that such person or his Agent may be present at such testing.

Ibid.
Notice to be given when officer proposes to test samples.

13. On any such testing, if it appears to the officer or other person so testing that the petroleum from which such sample has been taken is first class, second class or dangerous petroleum, such officer or other person may certify such fact, and the certificate so given shall be receivable as evidence in any proceedings which may be taken under this Act against the dealer in whose possession such petroleum was found; and shall be *primâ facie* proof of the fact stated therein.

Ibid.
Certificate as to result of such testing.

Penalties.

14. Any person who, in contravention of this Act or of any rules made hereunder, imports, possesses or transports any petroleum, and any person who otherwise contravenes any such rules or any condition contained in a license granted hereunder, shall be punished with imprisonment for a term which may extend to three months, or with fine which may extend to one thousand rupees, or with both.

Penalty for illegal importation, &c., of petroleum.

15. Any person keeping, transporting, selling or exposing for sale petroleum in vessels not marked as prescribed by section ten shall be punished with fine which may extend to fifty rupees.

34 and 35 Vic., c. 105, s. 63. Penalty for keeping, transporting or exposing for sale petroleum in contravention of section 10.

16. Any dealer in petroleum who refuses or neglects to shew to any officer authorized under section eleven any place, or any of the vessels, in which petroleum in his possession is stored or contained, or to give him such assistance as he may require for examining the same, or to give him samples of such petroleum on payment of the value of such samples, shall be punished with fine which may extend to two hundred rupees.

34 and 35 Vic., c. 105, s. 12. Penalty for refusing to comply with section 11.

17. In any case in which an offence under section fourteen or section fifteen has been committed, the convicting Magistrate may direct that—

Cf. Act I of 1878, s. 11. Confiscation of petroleum.

(*a*) the petroleum in respect of which the offence has been committed, or

(*b*) where the offender is importing or transporting or is in possession of any petroleum exceeding the quantity (if any) which he is permitted to import, transport or possess, as the case may be, the whole of the petroleum which he is importing or transporting, or is in possession of,

shall be confiscated.

Miscellaneous.

18. All rules made by the Local Government under this Act shall be published in the official Gazette, and shall thereupon, so far as they are consistent with this Act, have the force of law:

Rules when to have force of law.

Provided that no such rule shall be so published without the previous sanction of the Governor General in Council.

19. The Governor General in Council may, from time to time, by notification in the *Gazette of India*, extend the whole or any portion of this Act to any inflammable substance other than petroleum, and may by such notification fix, in substitution for the quantities of petroleum fixed by sections five, seven and eight, the quantities of such substance to which these sections shall apply.

34 and 35 Vic., c. 105, s. 14. Power to extend this Act to other substances.

The Governor General in Council may by a like notification cancel any notification issued under this section.

THE SCHEDULE.

Specification explanatory of the Test Apparatus.

The following is a description of the details of the apparatus:—

Committee's recommendations, para 5, and 42 and 43 Vic., c. 47.

The oil cup consists of a cylindrical vessel 2″ diameter, $2\frac{2}{10}$″ height (internal), with outward projecting rim $\frac{5}{10}$″ wide, $\frac{3}{8}$″ from the top and $1\frac{7}{8}$″ from the bottom of the cup. It is made of gun metal or brass (17 B. W. G.), tinned inside. A bracket, consisting of a short stout piece of wire, bent upwards and terminating in a point, is fixed to the inside of the cup to serve as a gauge. The distance of the point from the bottom of the cup is $1\frac{1}{2}$″. The cup is provided with a closefitting overlapping cover made of brass (22 B. W. G.) which carries the thermometer and test lamp. The latter is suspended from two supports from the side by means of trunnions, upon which it may be made to oscillate; it is provided with a spout the mouth of which is $\frac{1}{16}$″ in diameter. The socket which is to hold the thermometer is fixed at such an angle, and its length is so adjusted, that the bulb of the thermometer, when inserted to its full depth, shall be $1\frac{1}{2}$″ below the centre of the lid.

The cover is provided with three square holes: one in the centre $\frac{5}{10}$″ by $\frac{4}{10}$″, and two smaller ones, $\frac{3}{10}$″ by $\frac{2}{10}$″, close to the sides and opposite each other. These three holes may be closed and uncovered by means of a slide moving in grooves, and having perforations corresponding to those on the lid.

In moving the slide so as to uncover the holes, the oscillating lamp is caught by a pin fixed in the slide, and tilted in such a way as to bring the end of the spout just below the surface of the lid. Upon the slide being pushed back so as to cover the holes, the lamp returns to its original position.

Upon the cover, in front of, and in line with, the mouth of the lamp, is fixed a white bead the dimensions of which represent the size of the test flame to be used.

The bath or heated vessel consists of two flat-bottomed copper cylinders (24 B. W. G.), an inner one of 3″ diameter and $2\frac{1}{2}$″ height, and an outer one of $5\frac{1}{2}$″ diameter and $5\frac{3}{4}$″ height; they are soldered to a circular copper plate (20 B. W. G.) perforated in the centre, which forms the top of the bath, in such a manner as to inclose the space between the two cylinders, but leaving access to the inner cylinder. The top of the bath projects both outwards and inwards about $\frac{3}{8}$″, that is, its diameter is about $\frac{6}{8}$″ greater than that of the body of the bath, while the diameter of the circular opening in the centre is about the same amount less than that of the inner copper cylinder. To the inner projection of the top is fastened, by six small screws, a flat ring of ebonite, the screws being sunk below the surface of the ebonite to avoid metallic contact between the bath and the oil cup. The exact distance between the sides and bottom of the bath of the oil lamp is $1\frac{1}{2}$″. A split socket similar to that on the cover of the oil cup, but set at a right angle, allows a thermometer to be inserted into the space between the two cylinders. The bath is further provided with a funnel, an overflow pipe, and two loop handles.

The bath rests upon a cast-iron tripod stand, to the ring of which is attached a copper cylinder or jacket (24 B. W. G.), flanged at the top, and of such dimensions that the bath, while firmly resting on the iron ring, just touches with its projecting top the inward-turned flange. The diameter of this outer jacket is $6\frac{1}{2}$″. One of the three legs of the stand serves as support for the spirit lamp, attached to it by means of a small swing bracket. The distance of the wick holder from the bottom of the bath is 1″.

Two thermometers are provided with the apparatus, the one for ascertaining the temperature of the bath, the other for determining the flashing point. The thermometer

for ascertaining the temperature of the water has a long bulb and a space at the top. Its range is from about 90° to 190° Fahrenheit. The scale (in degrees of Fahrenheit) is marked on an ivory back fastened to the tube in the usual way; it is fitted with a metal collar fitting the socket, and the part of the tube below the scale should have a length of about 3½" measured from the lower end of the scale to the end of the bulb. The thermometer for ascertaining the temperature of the oil is fitted with collar and ivory scale in a similar manner to the one described. It has a round bulb, a space at the top, and ranges from about 55° F. to 150° F.; it measures from end of ivory back to bulb 2¼."

Directions for applying the Test.

1. The test apparatus is to be placed for use in a position where it is not exposed to currents of air or draughts.

2. The heating vessel or water-bath is filled by pouring water into the funnel until it begins to flow out at the spout of the vessel. The temperature of the water at the commencement of the test is to be 130° Fahrenheit, and this is attained in the first instance either by mixing hot and cold water in the bath, or in a vessel from which the bath is filled, until the thermometer which is provided for testing the temperature of the water gives the proper indication; or by heating the water with the spirit lamp (which is attached to the stand of the apparatus) until the required temperature is indicated.

If the water has been heated too highly, it is easily reduced to 130° by pouring in cold water little by little (to replace a portion of the warm water) until the thermometer gives the proper reading.

When a test has been completed, this water-bath is again raised to 130° by placing the lamp underneath, and the result is readily obtained while the petroleum cup is being emptied, cooled, and refilled with a fresh sample to be tested. The lamp is then turned on its swivel from under the apparatus, and the next test is proceeded with.

3. The test lamp is prepared for use by fitting it with a piece of flat plaited candle-wick, and filling it with colza or rape oil up to the lower edge of the opening of the spout or wick tube. The lamp is trimmed so that when lighted it gives a flame of about 0·15 of an inch diameter, and this size of flame which is represented by the projecting white bead on the cover of the oil cup is readily maintained by simple manipulation from time to time with a small wire trimmer.

When gas is available it may be conveniently used in place of the little oil lamp, and for this purpose a test flame arrangement for use with gas may be substituted for the lamp.

4. The bath having been raised to the proper temperature, the oil to be tested is introduced into the petroleum cup, being poured in slowly until the level of the liquid just reaches the point of the gauge which is fixed in the cup. In warm weather the temperature of the room in which the samples to be tested have been kept should be observed in the first instance, and if it exceeds 65°, the samples to be tested should be cooled down (to about 60°) by immersing the bottle containing them in cold water, or by any other convenient method. The lid of the cup, with the slide closed, is then put on, and the cup is put into the bath or heating vessel. The thermometer in the lid of the cup has been adjusted so as to have its bulb just immersed in the liquid, and its position is not under any circumstances to be altered. When the cup has been placed in the proper position, the scale of the thermometer faces the operator.

NOTE.—A model apparatus is deposited at the office of the Master of the Mint, Calcutta.

5. The test lamp is then placed in position upon the lid of the cup, the lead line or pendulum,* which has been fixed in a convenient position in front of the operator, is set in motion, and the rise of the thermometer in the petroleum cup is watched. When the temperature has reached about 66°, the operation of testing is to be commenced, the test flame being applied once for every rise of one degree in the following manner:—

The slide is slowly drawn open while the pendulum performs three oscillations, and is closed during the fourth oscillation.

NOTE.—If it is desired to employ the test apparatus to determine the flashing points of oils of very low volatility, the mode of proceeding is to be modified as follows:—

The air chamber which surrounds the cup is filled with cold water, to a depth of 1½ inches, and the heating vessel or water-bath is filled as usual, but also with cold water. The lamp is then placed under the apparatus and kept there during the entire operation. If a very heavy oil is being dealt with, the operation may be commenced with water previously heated to 120°, instead of with cold water.

STATEMENT OF OBJECTS AND REASONS.

FOR some time past the dangerous nature of the inflammable oils which are being imported into this country has been engaging the attention of Government. In November, 1878, the notice of the Government of India was first drawn to the subject by the Government of Bombay, with a view, if necessary, to legislation being resorted to to check the importation of dangerous oils. On a reference being made to the Government of Bengal as to the expediency of such legislation, it was found that the subject had already been for some time before that Government, and that a Committee had been appointed for the purpose of considering the question of these oils in all its bearings. This Committee, which was composed of officials, experts and gentlemen interested in the trade, has presented its report, in which it strongly urges the necessity for legislation, and puts forward certain recommendations as to the lines on which in its opinion such legislation should proceed.

2. These recommendations follow, with certain modifications, introduced to meet the special circumstances, climatic and otherwise, of India, the outlines of 34 & 35 Vic., cap. 105 (since amended by 42 & 43 Vic., cap. 47), which is the principal Act governing this subject in the United Kingdom. They appear well adapted to carry out the object which the Committee had in view, namely, practical security of life and property, with the minimum of restrictions on an important and rapidly developing trade.

3. The following is the general substance of the conclusions of the Committee:—

1*st*.—All petroleum should be divided into three classes, namely,—

(*a*) first class petroleum with a flashing point at or above 103° F.;
(*b*) second class petroleum with a flashing point between 83° and 103° F.;
(*c*) dangerous petroleum with a flashing point below 83° F.

} According to Abel's close test.

2*ndly*.—All petroleum should be tested by Abel's close test, which has recently been adopted in the United Kingdom (see 42 & 43 Vic., cap 47, the Petroleum Act, 1879), for the purposes of the Petroleum Act, 1871, in preference to the old or open test which was fixed by that Act.

3*rdly*.—As second class petroleum flashes only at a temperature of 83°, or 10° higher than the temperature (73°) at which petroleum is considered safe enough to be exempted

* This pendulum is two (2) feet in length from the point of suspension to the centre of gravity of the weight.

from the provisions of the English Petroleum Act (see 42 & 43 Vic., cap, 47), and may therefore be regarded as at all events fairly safe, the importation, storage and transport of such petroleum, as well as of first class petroleum, should be left reasonably free, while the importation, storage and transport of dangerous petroleum, if not actually prohibited, should be subjected to such severe restrictions as practically to be so for purposes of ordinary use.

4. The Government of India has considered this report, and is disposed to concur generally in its conclusions and in the scheme of legislation contained in the Committee's recommendations. As the Government of Madras and the Chief Commissioner of Burma, as well as the Governments of Bombay and Bengal, are in favor of legislation, the Government of India is willing to accept the recommendation of the Committee that the legislation to be undertaken should be in the Council of the Governor General, and accordingly the present Bill, which embodies generally the recommendations of the Committee, has been prepared.

5. As it seems desirable to check at once and generally, the trade in dangerous petroleum (and it would be unfair if all ports were not put on the same footing as to the importation of first class and second class petroleum), the provisions of the Bill relating to dangerous petroleum and the importation of first class and second class petroleum are made to extend to the whole of India; but its other provisions are only applicable at the discretion of the Local Government.

The details of the measure have been left in a great measure to rules to be framed by the Local Government, with the sanction of the Governor General in Council, as this seems the most convenient course in a case of this sort, where the local circumstances and peculiar features of the trade of various places have to be considered.

6. A section has been added to the Bill corresponding with section 14 of 34 & 35 Vic., cap. 105, enabling the Governor General in Council hereafter to extend the Act to substances other than petroleum, and to adapt certain of the provisions of the Act to the case of such substances.

7. The length of the pendulum which was by an oversight omitted from the description of Professor Abel's test in the first schedule to the 42 & 43 Vic., cap. 47, has been inserted in a foot-note to the schedule of the Bill on information furnished by Mr. Pedler.

8. The opportunity has been taken to repeal the thirty-seventh section of the Indian Ports Act relating to inflammable oils, and Bengal Act, No. III of 1865, which regulates in Calcutta and Howrah the importation and storage of inflammable oils, as the present Bill will make those enactments unnecessary.

The 3rd July 1880. WHITLEY STOKES.

Mysore Govt. Press, Bangalore.—1880.

544

THE

MYSORE GAZETTE.

Published by Authority.

BANGALORE, SATURDAY, SEPTEMBER 25, 1880.

☞ Separate paging is given to this Part in order that it may be filed as a separate compilation.

PART III.

Acts and Bills of the Governor General of India in Council, &c.

THE PETROLEUM BILL, 1880.

CONTENTS.

PREAMBLE.

Preliminary.

SECTIONS.

1. Short title
   Commencement.
   Local extent.
2. Repeal of enactments.
3. Interpretation-clause.

First class and second class Petroleum.

4. Power to make rules as to the importation of first and second class petroleum.
5. Possession and transport of first and second class petroleum.
6. Power to make rules as to such possession and transport.

Dangerous Petroleum.

7. Dangerous petroleum in quantities exceeding 40 gallons.
   Application for license to import, transport or possess such petroleum.
   Power to grant license.
8. Dangerous petroleum in quantities not exceeding 40 gallons.
9. Application of sections 4 and 6.

Petroleum generally.

10. Vessels containing petroleum to be marked.
11. Power to inspect and require dealer to sell samples.
12. Notice to be given when officer proposes to test samples.
13. Certificate as to result of such testing.

SECTIONS.

Penalties.

14. Penalty for illegal importation, &c., of petroleum
15. Penalty for keeping, &c., petroleum in contravention of section 10.
16. Penalty for refusing to comply with section 11.
17. Confiscation of petroleum.

Miscellaneous.

18. Rules when to have force of law.
19. Power to extend this Act to other substances.

THE SCHEDULE.

A Bill to Regulate the importation, possession and transport of Petroleum and other substances of a like nature.

Preamble.

WHEREAS it is expedient to regulate the importation, possession and transport of petroleum and other substances of a like nature; It is hereby enacted as follows:—

Preliminary.

Short title.
Committee's recommendations, para 1.

1. This Act may be called "The Petroleum Act, 1880"; and it shall come into force on the first day of January, 1881.

Commencement.
Local extent.

The provisions of this Act relating to—

(*a*) dangerous petroleum, and

(*b*) the importation of first class and second class petroleum,

extend to the whole of British India. The rest of this Act extends only to such local areas as the Local Government may, from time to time, by notification in the official Gazette, direct.

Repeal of enactments.

2. The Indian Ports Act, 1875, section thirty-seven, and Bengal Act No. III of 1865, (*to make better provision for the prevention of injury from fire in ports, and to provide for the safe keeping of inflammable oils in ports and places within the Provinces under the control of the Lieutenant-Governor of Bengal*) are hereby repealed.

Interpretation-clause.

3. In this Act, unless there is something repugnant in the subject or context,—

34 and 35 Vic., c. 105, s. 3, with additions from Committee's report.
"Petroleum."

"Petroleum" includes also the liquids commonly known by the names of rock oil, Rangoon oil, Burma oil, kerosine, paraffine oil, mineral oil, petroline, gasoline, benzol, benzoline, benzine and any inflammable liquid that is made from petroleum, coal, schist, shale, peat or any other bituminous substance or from any products of petroleum.

Committee's recommendations, para 3.

But does not include any oil ordinarily used for lubricating purposes, and having its flashing point at or above two hundred and fifty degrees of Fahrenheit's thermometer.

Explanation.—The flashing point of petroleum means the lowest temperature at which the petroleum yields a vapour which will furnish a momentary flash or flame when tested with the apparatus and in the manner described in the Schedule hereto annexed.

Committee's recommendations, para. 4.

"First class petroleum" means petroleum having its flashing point at or above one hundred and three degrees of Fahrenheit's thermometer:

Committee's recommendations, para. 6.
"First class petroleum."

"Second class petroleum" means petroleum having its flashing point at or above eighty-three, but below one hundred and three, degrees of Fahrenheit's thermometer:

"Second class petroleum."

"Dangerous petroleum" means petroleum having its flashing point below eighty-three degrees of Fahrenheit's thermometer:.

"Dangerous petroleum."

"Import" means to bring into British India by sea or land;

"Import."

and "importation" means the bringing into British India as aforesaid.

"Transport" means to remove from one place to another within British India;

"Transport."

"Ship" includes anything made for the conveyance by water of human beings or property;

"Ship."

"Master" includes every person (except a Pilot or Harbour Master) having for the time being the charge or control of a ship;

"Master."

"Magistrate" means, in the Presidency-towns, a Presidency Magistrate, and elsewhere a Magistrate of the first class or (when specially empowered by the Local Government to try cases under this Act) a Magistrate of the second class: and

"Magistrate."

"Owner" includes also any agent to whom a ship is consigned.

"Owner."

First class and second class petroleum.

4. The Local Government may, from time to time, make rules to regulate the importation of first class petroleum and second class petroleum; and in particular—

Committee's recommendations, paras 12 to 20.
Power to make rules as to the importation of first and second class petroleum.

(*a*) for ascertaining the quantity and description of any such petroleum on board a ship.

(*b*) to provide for the delivery by the master of a ship of samples of such petroleum and for the testing thereof before such petroleum is landed from such ship;

(*c*) to determine the places at which only such petroleum may be landed; and

(*d*) to regulate the time and mode of, and the precautions to be taken on, landing or transhipping any such petroleum.

5. No quantity of first class petroleum exceeding five hundred gallons, and

Possession and transport of first and second class petroleum.

no quantity of second class petroleum exceeding forty gallons,

shall be kept by any one person or on the same premises or shall be transported except under and in accordance with the conditions of a license granted under this Act.

6. The Local Government may from time to time make rules as to the granting of licenses to possess or transport first and second class petroleum in cases where such licenses are by law required.

Power to make rules as to such possession and transport.

Such rules may provide for the following among other matters, that is to say :—

in the case of licenses to possess petroleum—

(*a*) the nature and situation of the premises for which they may be granted, and

(*b*) the inspection of licensed premises and the testing of petroleum found thereon ;

in the case of licenses to transport petroleum—

(*c*) the manner in which such petroleum shall be packed, the mode of transit, and the route by which it is to be taken, and

(*d*) the stoppage and inspection of it during transit ;

in the case of both such licenses—

(*e*) the authority by which the license may be granted ;

(*f*) the fee to be charged for it ;

(*g*) the quantity of petroleum it is to cover ;

(*h*) the conditions which may be inserted in it ;

(*j*) the time during which it is to continue in force ; and

(*k*) the renewal of the license.

Dangerous Petroleum.

7. No quantity of dangerous petroleum exceeding forty gallons shall be imported or transported, or kept by any one person or on the same premises, except under, and in accordance with the conditions of, a license from the Local Government granted as next hereinafter provided.

Dangerous petroleum in quantities exceeding 40 gallons.

Every application for such a license shall be in writing, and shall declare—

Application for license to import, transport or possess such petroleum.

(*a*) the quantity of such petroleum which it is desired to import, transport or possess as the case may be ;

(*b*) the purpose for which the applicant believes that such petroleum will be used ; and

(*c*) that petroleum other than dangerous petroleum cannot be used for such purpose.

If the Local Government sees reason to believe that such petroleum will be used for such purpose and that no petroleum other than dangerous petroleum can be used for such purpose, it may grant such license for the importation, transport or possession (as the case may be) of such petroleum, absolutely or subject to such conditions as it thinks fit.

Power to grant License.

8. No quantity of dangerous petroleum equal to or less than forty gallons shall be kept or transported without a license;

Dangerous petroleum in quantities not exceeding 40 gallons.

Provided that nothing in this section shall apply in any case when the quantity of such petroleum kept by any one person or on the same premises or transported does not exceed three gallons and such petroleum is placed in separate glass, earthenware or metal vessels each of which contains not more than a pint and is securely stopped.

34 and 35 Vic., c. 105, s. 8.

9. Except as hereinbefore provided, the provisions contained in sections four and six in respect of first and second class petroleum shall apply also to dangerous petroleum.

Applications of sections 4 and 6.

Petroleum generally.

10. All petroleum—

34 and 35, Vic., c. 105, s. 6.
Vessels containing petroleum to be marked.

(*a*) which is kept at any place after seven days from the date on which it is imported,

(*b*) which is transported, or

(*c*) which is sold or exposed for sale,

shall be contained in vessels which shall bear an indelible mark or label in conspicuous characters stating what description of petroleum herein specified the same is.

Cf. Act I of 1878, s. 9.

11. Any officer specially authorized in this behalf by the Local Government may require any dealer in petroleum to shew him any place, and any of the vessels, in which any petroleum in his possession is stored or contained, to give him such assistance as he may require for examining the same and to deliver to him samples of such petroleum on payment of the value of such samples.

34 and 35 Vic., c. 105, s. 11.
Power to inspect and require dealer to sell samples.

12. When any such officer has, in exercise of the powers conferred by section eleven, or by purchase, obtained a sample of petroleum in the possession of a dealer, he may give a notice in writing to such dealer informing him that he is about to test such sample or cause the same to be tested with the apparatus and in the manner described in the Schedule hereto annexed, at a time and place to be fixed in such notice, and that such person or his Agent may be present at such testing.

Ibid.
Notice to be given when officer proposes to test samples.

13. On any such testing, if it appears to the officer or other person so testing that the petroleum from which such sample has been taken is first class, second class or dangerous petroleum, such officer or other person may certify such fact, and the certificate so given shall be receivable as evidence in any proceedings which may be taken under this Act against the dealer in whose possession such petroleum was found; and shall be *primâ facie* proof of the fact stated therein.

Ibid.
Certificate as to result of such testing.

Penalties.

Penalty for illegal importation, &c., of petroleum.

14. Any person who, in contravention of this Act or of any rules made hereunder, imports, possesses or transports any petroleum, and any person who otherwise contravenes any such rules or any condition contained in a license granted hereunder, shall be punished with imprisonment for a term which may extend to three months, or with fine which may extend to one thousand rupees, or with both.

34 and 35 Vic., c. 105, s. 63.
Penalty for keeping, transporting or exposing for sale petroleum in contravention of section 10.

15. Any person keeping, transporting, selling or exposing for sale petroleum in vessels not marked as prescribed by section ten shall be punished with fine which may extend to fifty rupees.

34 and 35 Vic., c. 105, s. 12.
Penalty for refusing to comply with section 11.

16. Any dealer in petroleum who refuses or neglects to shew to any officer authorized under section eleven any place, or any of the vessels, in which petroleum in his possession is stored or contained, or to give him such assistance as he may require for examining the same, or to give him samples of such petroleum on payment of the value of such samples, shall be punished with fine which may extend to two hundred rupees.

Cf. Act I of 1878, s. 11.
Confiscation of petroleum.

17. In any case in which an offence under section fourteen or section fifteen has been committed, the convicting Magistrate may direct that—

(*a*) the petroleum in respect of which the offence has been committed, or

(*b*) where the offender is importing or transporting or is in possession of any petroleum exceeding the quantity (if any) which he is permitted to import, transport or possess, as the case may be, the whole of the petroleum which he is importing or transporting, or is in possession of,

shall be confiscated.

Miscellaneous.

Rules when to have force of law.

18. All rules made by the Local Government under this Act shall be published in the official Gazette, and shall thereupon, so far as they are consistent with this Act, have the force of law:

Provided that no such rule shall be so published without the previous sanction of the Governor General in Council.

34 and 35 Vic., c. 105, s. 14.
Power to extend this Act to other substances.

19. The Governor General in Council may, from time to time, by notification in the *Gazette of India*, extend the whole or any portion of this Act to any inflammable substance other than petroleum, and may by such notification fix, in substitution for the quantities of petroleum fixed by sections five, seven and eight, the quantities of such substance to which these sections shall apply.

The Governor General in Council may by a like notification cancel any notification issued under this section.

THE SCHEDULE.

Specification explanatory of the Test Apparatus.

The following is a description of the details of the apparatus:—

Committee's recommendations, para 5, and 42 and 43 Vic., c. 47.

The oil cup consists of a cylindrical vessel 2″ diameter, $2\frac{2}{10}$″ height (internal), with outward projecting rim $\frac{5}{10}$″ wide, $\frac{3}{8}$″ from the top and $1\frac{7}{8}$″ from the bottom of the cup. It is made of gun metal or brass (17 B. W. G.), tinned inside. A bracket, consisting of a short stout piece of wire, bent upwards and terminating in a point, is fixed to the inside of the cup to serve as a gauge. The distance of the point from the bottom of the cup is $1\frac{1}{2}$″. The cup is provided with a closefitting overlapping cover made of brass (22 B. W. G.) which carries the thermometer and test lamp. The latter is suspended from two supports from the side by means of trunnions, upon which it may be made to oscillate; it is provided with a spout the mouth of which is $\frac{1}{16}$″ in diameter. The socket which is to hold the thermometer is fixed at such an angle, and its length is so adjusted, that the bulb of the thermometer, when inserted to its full depth, shall be $1\frac{1}{2}$″ below the centre of the lid.

The cover is provided with three square holes, one in the centre $\frac{5}{10}$″ by $\frac{4}{10}$″, and two smaller ones, $\frac{3}{10}$″ by $\frac{2}{10}$″, close to the sides and opposite each other. These three holes may be closed and uncovered by means of a slide moving in grooves, and having perforations corresponding to those on the lid.

In moving the slide so as to uncover the holes, the oscillating lamp is caught by a pin fixed in the slide, and tilted in such a way as to bring the end of the spout just below the surface of the lid. Upon the slide being pushed back so as to cover the holes, the lamp returns to its original position.

Upon the cover, in front of, and in line with, the mouth of the lamp, is fixed a white bead the dimensions of which represent the size of the test flame to be used.

The bath or heated vessel consists of two flat-bottomed copper cylinders (24 B. W. G.), an inner one of 3″ diameter and $2\frac{1}{2}$″ height, and an outer one of $5\frac{1}{2}$″ diameter and $5\frac{3}{4}$″ height; they are soldered to a circular copper plate (20 B. W. G.) perforated in the centre, which forms the top of the bath, in such a manner as to inclose the space between the two cylinders, but leaving access to the inner cylinder. The top of the bath projects both outwards and inwards about $\frac{3}{8}$″, that is, its diameter is about $\frac{6}{8}$″ greater than that of the body of the bath, while the diameter of the circular opening in the centre is about the same amount less than that of the inner copper cylinder. To the inner projection of the top is fastened, by six small screws, a flat ring of ebonite, the screws being sunk below the surface of the ebonite to avoid metallic contact between the bath and the oil cup. The exact distance between the sides and bottom of the bath of the oil lamp is $1\frac{1}{2}$″. A split socket similar to that on the cover of the oil cup, but set at a right angle, allows a thermometer to be inserted into the space between the two cylinders. The bath is further provided with a funnel, an overflow pipe, and two loop handles.

The bath rests upon a cast-iron tripod stand, to the ring of which is attached a copper cylinder or jacket (24 B. W. G.), flanged at the top, and of such dimensions that the bath, while firmly resting on the iron ring, just touches with its projecting top the inward-turned flange. The diameter of this outer jacket is $6\frac{1}{2}$″. One of the three legs of the stand serves as support for the spirit lamp, attached to it by means of a small swing bracket. The distance of the wick holder from the bottom of the bath is 1″.

Two thermometers are provided with the apparatus, the one for ascertaining the temperature of the bath, the other for determining the flashing point. The thermometer

for ascertaining the temperature of the water has a long bulb and a space at the top. Its range is from about 90° to 190° Fahrenheit. The scale (in degrees of Fahrenheit) is marked on an ivory back fastened to the tube in the usual way; it is fitted with a metal collar fitting the socket, and the part of the tube below the scale should have a length of about 3½″ measured from the lower end of the scale to the end of the bulb. The thermometer for ascertaining the temperature of the oil is fitted with collar and ivory scale in a similar manner to the one described. It has a round bulb, a space at the top, and ranges from about 55° F. to 150° F.; it measures from end of ivory back to bulb 2¼.″

Directions for applying the Test.

1. The test apparatus is to be placed for use in a position where it is not exposed to currents of air or draughts.

2. The heating vessel or water-bath is filled by pouring water into the funnel until it begins to flow out at the spout of the vessel. The temperature of the water at the commencement of the test is to be 130° Fahrenheit, and this is attained in the first instance either by mixing hot and cold water in the bath, or in a vessel from which the bath is filled, until the thermometer which is provided for testing the temperature of the water gives the proper indication; or by heating the water with the spirit lamp (which is attached to the stand of the apparatus) until the required temperature is indicated.

If the water has been heated too highly, it is easily reduced to 130° by pouring in cold water little by little (to replace a portion of the warm water) until the thermometer gives the proper reading.

When a test has been completed, this water-bath is again raised to 130° by placing the lamp underneath, and the result is readily obtained while the petroleum cup is being emptied, cooled, and refilled with a fresh sample to be tested. The lamp is then turned on its swivel from under the apparatus, and the next test is proceeded with.

3. The test lamp is prepared for use by fitting it with a piece of flat plaited candle-wick, and filling it with colza or rape oil up to the lower edge of the opening of the spout or wick tube. The lamp is trimmed so that when lighted it gives a flame of about 0·15 of an inch diameter, and this size of flame which is represented by the projecting white bead on the cover of the oil cup is readily maintained by simple manipulation from time to time with a small wire trimmer.

When gas is available it may be conveniently used in place of the little oil lamp, and for this purpose a test flame arrangement for use with gas may be substituted for the lamp.

4. The bath having been raised to the proper temperature, the oil to be tested is introduced into the petroleum cup, being poured in slowly until the level of the liquid just reaches the point of the gauge which is fixed in the cup. In warm weather the temperature of the room in which the samples to be tested have been kept should be observed in the first instance, and if it exceeds 65°, the samples to be tested should be cooled down (to about 60°) by immersing the bottle containing them in cold water, or by any other convenient method. The lid of the cup, with the slide closed, is then put on, and the cup is put into the bath or heating vessel. The thermometer in the lid of the cup has been adjusted so as to have its bulb just immersed in the liquid, and its position is not under any circumstances to be altered. When the cup has been placed in the proper position, the scale of the thermometer faces the operator.

NOTE.—A model apparatus is deposited at the office of the Master of the Mint, Calcutta.

5. The test lamp is then placed in position upon the lid of the cup, the lead line or pendulum,* which has been fixed in a convenient position in front of the operator, is set in motion, and the rise of the thermometer in the petroleum cup is watched. When the temperature has reached about 66°, the operation of testing is to be commenced, the test flame being applied once for every rise of one degree in the following manner:—

The slide is slowly drawn open while the pendulum performs three oscillations, and is closed during the fourth oscillation.

NOTE.—If it is desired to employ the test apparatus to determine the flashing points of oils of very low volatility, the mode of proceeding is to be modified as follows:—

The air chamber which surrounds the cup is filled with cold water, to a depth of 1½ inches, and the heating vessel or water-bath is filled as usual, but also with cold water. The lamp is then placed under the apparatus and kept there during the entire operation. If a very heavy oil is being dealt with, the operation may be commenced with water previously heated to 120°, instead of with cold water.

STATEMENT OF OBJECTS AND REASONS.

FOR some time past the dangerous nature of the inflammable oils which are being imported into this country has been engaging the attention of Government. In November, 1878, the notice of the Government of India was first drawn to the subject by the Government of Bombay, with a view, if necessary, to legislation being resorted to to check the importation of dangerous oils. On a reference being made to the Government of Bengal as to the expediency of such legislation, it was found that the subject had already been for some time before that Government, and that a Committee had been appointed for the purpose of considering the question of these oils in all its bearings. This Committee, which was composed of officials, experts and gentlemen interested in the trade, has presented its report, in which it strongly urges the necessity for legislation, and puts forward certain recommendations as to the lines on which in its opinion such legislation should proceed.

2. These recommendations follow, with certain modifications, introduced to meet the special circumstances, climatic and otherwise, of India, the outlines of 34 & 35 Vic., cap. 105 (since amended by 42 & 43 Vic., cap. 47). which is the principal Act governing this subject in the United Kingdom. They appear well adapted to carry out the object which the Committee had in view, namely, practical security of life and property, with the minimum of restrictions on an important and rapidly developing trade.

3. The following is the general substance of the conclusions of the Committee:—

1*st*.—All petroleum should be divided into three classes, namely,—

(*a*) first class petroleum with a flashing point at or above 103° F.;
(*b*) second class petroleum with a flashing point between 83° and 103° F.;
(*c*) dangerous petroleum with a flashing point below 83° F.

} According to Abel's close test.

2*ndly*.—All petroleum should be tested by Abel's close test, which has recently been adopted in the United Kingdom (see 42 & 43 Vic., cap 47, the Petroleum Act, 1879), for the purposes of the Petroleum Act, 1871, in preference to the old or open test which was fixed by that Act.

3*rdly*.—As second class petroleum flashes only at a temperature of 83°, or 10° higher than the temperature (73°) at which petroleum is considered safe enough to be exempted

* This pendulum is two (2) feet in length from the point of suspension to the centre of gravity of the weight.

from the provisions of the English Petroleum Act (see 42 & 43 Vic., cap. 47), and may therefore be regarded as at all events fairly safe, the importation, storage and transport of such petroleum, as well as of first class petroleum, should be left reasonably free, while the importation, storage and transport of dangerous petroleum, if not actually prohibited, should be subjected to such severe restrictions as practically to be so for purposes of ordinary use.

4. The Government of India has considered this report, and is disposed to concur generally in its conclusions and in the scheme of legislation contained in the Committee's recommendations. As the Government of Madras and the Chief Commissioner of Burma, as well as the Governments of Bombay and Bengal, are in favor of legislation, the Government of India is willing to accept the recommendation of the Committee that the legislation to be undertaken should be in the Council of the Governor General, and accordingly the present Bill, which embodies generally the recommendations of the Committee, has been prepared.

5. As it seems desirable to check at once and generally, the trade in dangerous petroleum (and it would be unfair if all ports were not put on the same footing as to the importation of first class and second class petroleum), the provisions of the Bill relating to dangerous petroleum and the importation of first class and second class petroleum are made to extend to the whole of India; but its other provisions are only applicable at the discretion of the Local Government.

The details of the measure have been left in a great measure to rules to be framed by the Local Government, with the sanction of the Governor General in Council, as this seems the most convenient course in a case of this sort, where the local circumstances and peculiar features of the trade of various places have to be considered.

6. A section has been added to the Bill corresponding with section 14 of 34 & 35 Vic., cap. 105, enabling the Governor General in Council hereafter to extend the Act to substances other than petroleum, and to adapt certain of the provisions of the Act to the case of such substances.

7. The length of the pendulum which was by an oversight omitted from the description of Professor Abel's test in the first schedule to the 42 & 43 Vic., cap. 47, has been inserted in a foot-note to the schedule of the Bill on information furnished by Mr. Pedler.

8. The opportunity has been taken to repeal the thirty-seventh section of the Indian Ports Act relating to inflammable oils, and Bengal Act, No. III of 1865, which regulates in Calcutta and Howrah the importation and storage of inflammable oils, as the present Bill will make those enactments unnecessary.

The 3rd July 1880. WHITLEY STOKES.

Mysore Govt. Press, Bangalore —1880.

THE

MYSORE GAZETTE

Published by Authority.

BANGALORE, SATURDAY, OCTOBER 23, 1880.

☞ Separate paging is given to this Part in order that it may be filed as a separate compilation.

PART III.

Acts and Bills of the Governor General of India in Council, &c.

The following Bill was introduced into the Council of the Governor General of Ind for the purpose of making Laws and Regulations on the 1st October 1880, and was referred to a Select Committee :—

No. 20 of 1880.

A Bill to provide for certain matters relating to Securities of the Government of India.

Preamble.

WHEREAS the Governor General in Council has determined to issue, in respct of the four and a half per cent loan of 1880, certificates declaring the bearers thereof entitled to the principal sums specified therein, and coupons for the interest payable on such principal sums ;

and whereas the Governor General in Council may from time to time desire to issue like certificates, with or without like coupons, in respect of other loans ;

and whereas it is expedient to declare the mode in which the title to such certificates and coupons shall be transferable ;

and whereas it is also expedient to provide for certain other matters relating to all securities of the Government of India ; It is hereby enacted as follows :—

Short Title.
Commencement.

1. This Act may be called "The Indian Securities Act, 1880 ;" and shall come into force at once.

"Government securities."

2. In this Act, "Government securities" includes promissory notes, debentures, loan-certificates, coupons and all other securities issued by the Government of India, whether before or after the passing of this Act.

3. Whenever the Governor General in Council has issued, in respect of any loan, a certificate declaring the bearer thereof to be entitled to the portion of the loan therein expressed, or a coupon for any amount payable as interest on any portion of such loan, the title to such certificate or coupon may be transferred, and, on payment, by or on behalf of the Government, to the bearer of such certificate or coupon, of the amount expressed therein, at or after the date on which it becomes due, the Government shall be discharged as if such certificate or coupon were a promissory note payable to bearer.

26 & 27 Vic., c. 73. s. 5.; 33 & 34 Vic., c. 71 s. 32.
Certificates and coupons may be transferred and discharged like promissory notes payable to bearer.

4. No notice of any trust in respect of any Government security shall be receivable by the Government.

26 & and 27 Vic., c. 73, s. 5, para 6, 33 & 34 Vic., c. 71, s. 30.
No notice of trust.

5. No person shall, merely by reason of his having endorsed any Government security, be liable to pay any money due, whether on account of principal or interest, thereunder.

Indorser of Government security not liable for amount thereof.

6. The signature of the officer of the Government of India authorized to sign any Government securities on behalf of the Government may be printed, engraved or lithographed, or impressed by such other mechanical process as the Governor General in Council may direct, on such securities.

16 & 17 Vic., c. 2.
Signature to Government securities may be printed, &c.

Any such signature so printed, engraved, lithographed or otherwise impressed shall be as valid as if the same had been subscribed in the proper handwriting of such officer.

Statement of Objects and Reasons.

The Government of India has determined to issue loan-certificates payable to bearer with coupons attached in lieu of promissory notes in the case of the 4½ per cent loan of 1880, and it is not improbable that it will desire to issue similar certificates in the case of other loans. As the English law relating to such certificates and coupons is at present in process of development, and as it is, accordingly, by no means certain what legal incidents a Court would attach to these documents, it has been deemed advisable to provide by legislation for two points on which it is essential that the law should be definitely fixed. These are---

(*a*) that they shall be transferable by delivery;

(*b*) that payment to the bearer of the amount expressed in them shall be a full discharge to the Government.

In enacting these provisions the Bill follows the precedent of the Acts of Parliament relating to English stock-certificates (33 & 34 Vic., c. 71, s. 32, paragraph 1, and s. 35, paragraph 2) and India stock-certificates (26 & 27 Vic., c. 73, s. 5, paragraphs 4 and 7).

2. The opportunity has also been taken to provide for certain other matters in relation to all Government securities in regard to which the need for ligislation has been brought before Government.

55

It is desirable that the Government should be empowered by law to decline to notice endorsements of Government securities involving a trust. This is in practice done at present; but as there are doubts as to how far the Courts might uphold such practice, the Bill provides specifically (section 4) that no notice of any trust in respect of any security of the Government of India shall be receivable by the Government. In this case also we have a precedent in the Acts of Parliament above-mentioned, see section 5, paragraph 6, of the former, and section 30 of the latter Act.

3. Another section (5) of the Bill, which provides that no one endorsing a Government security shall incur any liability thereby, has been introduced to remove a doubt which has been felt in some quarters as to the legal effects of such endorsement.

4. Lastly, the Bill provides that the signatures to Government securities might be printed, engraved, lithographed or impressed by other mechanical process. The convenience of such an arrangement in the interest of the public service is obvious. The 16 & 17 Vic., c. 2, allows the signature to the Bank of England notes to be impressed by machinery.

WHITLEY STOKES.

The 29th September 1880.

D. FITZPATRICK,
Secy. to the Govt. of India.

Mysore Government Press, Bangalore—1880.

THE
MYSORE GAZETTE
Published by Authority.

BANGALORE, SATURDAY, OCTOBER 30, 1880.

☞ Separate paging is given to this Part in order that it may be filed as a separate compilation.

PART III.

Acts and Bills of the Governor General of India in Council, &c.

The following Bill was introduced into the Council of the Governor General of India for the purpose of making Laws and Regulations on the 1st October 1880, and was referred to a Select Committee:—

No. 20 of 1880.

A Bill to provide for certain matters relating to Securities of the Government of India.

Preamble.

WHEREAS the Governor General in Council has determined to issue, in respct of the four and a half per cent loan of 1880, certificates declaring the bearers thereof entitled to the principal sums specified therein, and coupons for the interest payable on such principal sums;

and whereas the Governor General in Council may from time to time desire to issue like certificates, with or without like coupons, in respect of other loans;

and whereas it is expedient to declare the mode in which the title to such certificates and coupons shall be transferable;

and whereas it is also expedient to provide for certain other matters relating to all securities of the Government of India; It is hereby enacted as follows:—

Short Title. Commencement.

1. This Act may be called "The Indian Securities Act, 1880;" and shall come into force at once.

"Government securities."

2. In this Act, "Government securities" includes promissory notes, debentures, loan-certificates, coupons and all other securities issued by the Government of India, whether before or after the passing of this Act.

558

3. Whenever the Governor General in Council has issued, in respect of any loan, a certificate declaring the bearer thereof to be entitled to the portion of the loan therein expressed, or a coupon for any amount payable as interest on any portion of such loan, the title to such certificate or coupon may be transferred, and, on payment, by or on behalf of the Government, to the bearer of such certificate or coupon, of the amount expressed therein, at or after the date on which it becomes due, the Government shall be discharged as if such certificate or coupon were a promissory note payable to bearer.

26 & 27 Vic., c. 73. s. 5.; 33 & 34 Vic., c. 71 s. 32.
Certificates and coupons may be transferred and discharged like promissory notes payable to bearer.

4. No notice of any trust in respect of any Government security shall be receivable by the Government.

26 & and 27 Vic., c. 73, s. 5, para 6, 33 & 34 Vic., c. 71, s. 30.
No notice of trust.

5. No person shall, merely by reason of his having endorsed any Government security, be liable to pay any money due, whether on account of principal or interest, thereunder.

Indorser of Government security not liable for amount thereof.

6. The signature of the officer of the Government of India authorized to sign any Government securities on behalf of the Government may be printed, engraved or lithographed, or impressed by such other mechanical process as the Governor General in Council may direct, on such securities.

16 & 17 Vic., c. 2.
Signature to Government securities may be printed, &c.

Any such signature so printed, engraved, lithographed or otherwise impressed shall be as valid as if the same had been subscribed in the proper handwriting of such officer.

STATEMENT OF OBJECTS AND REASONS.

THE Government of India has determined to issue loan-certificates payable to bearer with coupons attached in lieu of promissory notes in the case of the 4½ per cent loan of 1880, and it is not improbable that it will desire to issue similar certificates in the case of other loans. As the English law relating to such certificates and coupons is at present in process of development, and as it is, accordingly, by no means certain what legal incidents a Court would attach to these documents, it has been deemed advisable to provide by legislation for two points on which it is essential that the law should be definitely fixed. These are—

(*a*) that they shall be transferable by delivery;

(*b*) that payment to the bearer of the amount expressed in them shall be a full discharge to the Government.

In enacting these provisions the Bill follows the precedent of the Acts of Parliament relating to English stock-certificates (33 & 34 Vic., c. 71, s. 32, paragraph 1, and s. 35, paragraph 2) and India stock-certificates (26 & 27 Vic., c. 73, s. 5, paragraphs 4 and 7).

2. The opportunity has also been taken to provide for certain other matters in relation to all Government securities in regard to which the need for ligislation has been brought before Government.

559

It is desirable that the Government should be empowered by law to decline to notice endorsements of Government securities involving a trust. This is in practice done at present; but as there are doubts as to how far the Courts might uphold such practice, the Bill provides specifically (section 4) that no notice of any trust in respect of any security of the Government of India shall be receivable by the Government. In this case also we have a precedent in the Acts of Parliament above-mentioned, see section 5, paragraph 6, of the former, and section 30 of the latter Act.

3. Another section (5) of the Bill, which provides that no one endorsing a Government security shall incur any liability thereby, has been introduced to remove a doubt which has been felt in some quarters as to the legal effects of such endorsement.

4. Lastly, the Bill provides that the signatures to Government securities might be printed, engraved, lithographed or impressed by other mechanical process. The convenience of such an arrangement in the interest of the public service is obvious. The 16 & 17 Vic., c. 2, allows the signature to the Bank of England notes to be impressed by machinery.

WHITLEY STOKES.

The 29th September 1880.

D. FITZPATRICK,
Secy. to the Govt. of India.

Mysore Government Press, Bangalore—1880.

THE
MYSORE GAZETTE
Published by Authority.

BANGALORE, SATURDAY, NOVEMBER 6, 1880.

☞ Separate paging is given to this Part in order that it may be filed as a separate compilation.

PART III.

Acts and Bills of the Governor General of India in Council, &c.

The following Bill was introduced into the Council of the Governor General of India for the purpose of making Laws and Regulations on the 1st October 1880, and was referred to a Select Committee :—

No. 20 of 1880.

A Bill to provide for certain matters relating to Securities of the Government of India.

Preamble.

WHEREAS the Governor General in Council has determined to issue, in respct of the four and a half per cent loan of 1880, certificates declaring the bearers thereof entitled to the principal sums specified therein, and coupons for the interest payable on such principal sums ;

and whereas the Governor General in Council may from time to time desire to issue like certificates, with or without like coupons, in respect of other loans ;

and whereas it is expedient to declare the mode in which the title to such certificates and coupons shall be transferable ;

and whereas it is also expedient to provide for certain other matters relating to all securities of the Government of India ; It is hereby enacted as follows :—

Short Title.
Commencement.

1. This Act may be called "The Indian Securities Act, 1880 ;" and shall come into force at once.

"Government securities."

2. In this Act, "Government securities" includes promissory notes, debentures, loan-certificates, coupons and all other securities issued by the Government of India, whether before or after the passing of this Act.

3. Whenever the Governor General in Council has issued, in respect of any loan, a certificate declaring the bearer thereof to be entitled to the portion of the loan therein expressed, or a coupon for any amount payable as interest on any portion of such loan, the title to such certificate or coupon may be transferred, and, on payment, by or on behalf of the Government, to the bearer of such certificate or coupon, of the amount expressed therein, at or after the date on which it becomes due, the Government shall be discharged as if such certificate or coupon were a promissory note payable to bearer.

26 & 27 Vic., c. 73, s. 5; 33 & 34 Vic., c. 71 s. 32.
Certificates and coupons may be transferred and discharged like promissory notes payable to bearer.

4. No notice of any trust in respect of any Government security shall be receivable by the Government.

26 & and 27 Vic., c. 73, s. 5, para 6, 33 & 34 Vic., c. 71, s. 30.
No notice of trust.

5. No person shall, merely by reason of his having endorsed any Government security, be liable to pay any money due, whether on account of principal or interest, thereunder.

Indorser of Government security not liable for amount thereof.

6. The signature of the officer of the Government of India authorized to sign any Government securities on behalf of the Government may be printed, engraved or lithographed, or impressed by such other mechanical process as the Governor General in Council may direct, on such securities.

16 & 17 Vic., c. 2.
Signature to Government securities may be printed, &c.

Any such signature so printed, engraved, lithographed or otherwise impressed shall be as valid as if the same had been subscribed in the proper handwriting of such officer.

STATEMENT OF OBJECTS AND REASONS.

THE Government of India has determined to issue loan-certificates payable to bearer with coupons attached in lieu of promissory notes in the case of the 4½ per cent loan of 1880, and it is not improbable that it will desire to issue similar certificates in the case of other loans. As the English law relating to such certificates and coupons is at present in process of development, and as it is, accordingly, by no means certain what legal incidents a Court would attach to these documents, it has been deemed advisable to provide by legislation for two points on which it is essential that the law should be definitely fixed. These are—

(*a*) that they shall be transferable by delivery;

(*b*) that payment to the bearer of the amount expressed in them shall be a full discharge to the Government.

In enacting these provisions the Bill follows the precedent of the Acts of Parliament relating to English stock-certificates (33 & 34 Vic., c. 71, s. 32, paragraph 1, and s. 35, paragraph 2) and India stock-certificates (26 & 27 Vic., c. 73, s. 5, paragraphs 4 and 7).

2. The opportunity has also been taken to provide for certain other matters in relation to all Government securities in regard to which the need for legislation has been brought before Government.

562

It is desirable that the Government should be empowered by law to decline to notice endorsements of Government securities involving a trust. This is in practice done at present; but as there are doubts as to how far the Courts might uphold such practice, the Bill provides specifically (section 4) that no notice of any trust in respect of any security of the Government of India shall be receivable by the Government. In this case also we have a precedent in the Acts of Parliament above-mentioned, see section 5, paragraph 6, of the former, and section 30 of the latter Act.

3. Another section (5) of the Bill, which provides that no one endorsing a Government security shall incur any liability thereby, has been introduced to remove a doubt which has been felt in some quarters as to the legal effects of such endorsement.

4. Lastly, the Bill provides that the signatures to Government securities might be printed, engraved, lithographed or impressed by other mechanical process. The convenience of such an arrangement in the interest of the public service is obvious. The 16 & 17 Vic., c. 2, allows the signature to the Bank of England notes to be impressed by machinery.

WHITLEY STOKES.

The 29th September 1880.

D. FITZPATRICK,
Secy. to the Govt. of India.

Mysore Government Press, Bangalore—1880.

THE

MYSORE GAZETTE.

Published by Authority.

BANGALORE, SATURDAY, DECEMBER 4, 1880.

☞ Separate paging is given to this Part in order that it may be filed as a separate compilation.

PART III.

Acts and Bills of the Governor General of India in Council, &c.

LEGISLATIVE DEPARTMENT.

The following Act of the Governor General of India in Council received the assent of His Excellency the Governor General on the 3rd November 1880, and is hereby promulgated for general information :—

ACT NO. XIV OF 1880.

An Act to provide for certain matters in connection with the taking of the Census.

Preamble.

WHEREAS it has been determined to take a census of British India, and it is expedient to provide for certain matters in connection with the taking of such census ; It is hereby enacted as follows :—

Short title. Commencement.

1. This Act may be called " The Indian Census Act, 1880," and shall come into force on the passing thereof.

Local extent.

2. This section and sections three, four and thirteen extend to the whole of British India.

The remaining sections extend only to such parts of British India as the Local Government may, from time to time, by notification in the official Gazette direct.

Appointment of Census-officers.

3. The Local Government may appoint any person by name or in virtue of his office to take, or aid in or surpervise the taking of, the census within any specified local area.

Persons so appointed shall be called " Census-officers."

The Local Government may delegate to such authority as it thinks fit the power conferred by this section.

Proof of appointment of Census-officer.

4. A declaration in writing, signed by any officer authorized by the Local Government in this behalf, that any person has been duly appointed a Census-officer for any local area shall be conclusive proof of such appointment.

Census-officers to be deemed public servants.

All Census-officers shall be deemed to be public servants within the meaning of the Indian Penal Code.

Duties of Census-officers how to be discharged in certain cases.

5. (*a*) Every military or naval officer in command of any body of men belonging to Her Majesty's military or naval forces or of any vessel of war,

(*b*) every person (except a pilot or harbour-master) having charge or control of a vessel,

(*c*) every person in charge of a lunatic asylum, hospital, workhouse, prison, reformatory or lock-up, or of any public, charitable, religious or educational institution,

(*d*) every keeper or manager of any sarái, hotel, boarding-house, lodging-house or club, and

(*e*) every occupant of immovable property having at the time of taking the census not less than fifty persons employed under him on or in such property,

shall, if so required by the Magistrate of the District, or, in the towns of Calcutta, Madras and Bombay, by such officer as the Local Government may appoint in this behalf, perform such of the duties of a Census-officer in relation to the persons who at the time of taking the census are under his command or charge, or inmates of his house or present on or in such property, as such Magistrate or officer may, by an order written, printed or lithographed, direct.

All the provisions of this Act relating to Census-officers shall apply (so far as they are applicable) to all such persons while performing such duties; and any person refusing or neglecting to perform any duty which he is directed under this section to perform shall be deemed to have committed an offence under section 187 of the Indian Penal Code.

Power of Magistrate of District to call upon certain persons to give assistance.

6. The Magistrate of the District may, by an order written, printed or lithographed, call upon all owners and occupiers of land, tenure-holders, farmers, assignees of land-revenue and lessees of fisheries under the Burma Fisheries Act, 1875, in his district, or their agents, and upon all members of panchâyats appointed in his district under Bengal Act No. VI of 1870 (*to provide for the appointment, dismissal and maintenance of Village Chaukidárs*), to give such assistance as he needs towards the taking of a census of the persons who are at the time of taking the census on the lands of such owners, occupiers, holders, farmers, and assignees, within the limits of such fisheries or in the villages for which such panchâyats are appointed, as the case may be.

Such order shall specify the nature of the assistance required, and such owners, occupiers, holders, farmers, assignees, lessees, or their agents, and the members of such panchâyats, shall be bound to obey it.

Census-officers empowered to ask questions.

7. Every Census-officer may ask all such questions of all persons within the limits of the local area for which he is appointed as, by instructions issued in this behalf by the Local Government and published in the official Gazette, he may be directed to ask.

Obligation to answer questions.

8. Every person of whom any question is asked under section seven shall be legally bound to answer such question to the best of his knowledge or belief:

Provided that no person shall be bound to state the name of any female member of his household; and that no woman shall be bound to state the name of her husband or deceased husband.

9. Every person occupying any house, enclosure, vessel or other place, shall allow the Census-officers such access thereto as they may require for the purposes of the census, and as, having regard to the customs of the country, may be reasonable.

Occupier of house, &c., to allow access.

10. Subject to such orders as the Local Government may issue in this behalf, any Census-officer may leave, or cause to be left, at any dwelling-house within the local area for which he is appointed, a schedule for the purpose of being filled up by the occupier of such house or of any specified part thereof with such particulars as the Local Government may direct regarding the persons present in such house or part at the time of taking the census.

Occupier of house to fill up schedule.

When any such schedule has been so left, the occupier of the house or part to which it relates shall fill up the same to the best of his knowledge or belief, so far as regards the persons present in such house or part, as the case may be, at the time aforesaid, and shall sign his name thereto, and, when so required, shall deliver the schedule so filled up and signed to the Census-officer or to such person as he may direct.

Any occupier of a dwelling-house or part thereof who knowingly and without sufficient cause fails to comply with the provisions of this section or makes any false return hereunder, shall be punished for every such offence, if it does not amount to an offence within the provisions of the Indian Penal Code, with fine which may extend to fifty rupees.

Penalty for failing to fill up schedule, &c., or making false return.

11. Any Census-officer who, knowingly and without sufficient cause, disobeys the instructions published by the Local Government under section seven, puts any offensive or improper question, or makes any false return, shall be punished for every such offence, if it does not amount to an offence within the provisions of the Indian Penal Code, with fine which may extend to fifty rupees.

Penalty for misconduct of Census-officers.

12. The Local Government may, by notification in the official Gazette,

Jurisdiction in prosecutions.

(*a*) declare before what classes of Magistrates prosecutions under this Act, or for neglecting or refusing to do anything required by this Act to be done, may be instituted; and

(*b*) direct that no such prosecution shall be instituted except with its previous sanction, or with the previous sanction of some officer authorized by it in this behalf.

Unless and until a notification is published under clause (*a*) of this section, all prosecutions under this Act shall, in the towns of Calcutta, Madras and Bombay, be instituted before a Presidency Magistrate, and elsewhere, before the Magistrate of the District.

13. Notwithstanding anything to the contrary contained in the Indian Evidence Act, 1872 no entry in any book, register or record made by a Census-officer in the discharge of his duty as such officer shall be admissible as evidence in any Civil proceeding or any proceeding under chapter forty or chapter forty-one of the Code of Criminal Procedure or chapter eighteen of the Presidency Magistrates Act, 1877.

Records of census not admissible in evidence in certain proceedings.

D. FITZPATRICK,
Secy. to the Govt. of India,
Legislative Department.

Mysore Government Press, Bangalore.—1880.

THE
MYSORE GAZETTE.
Published by Authority.

BANGALORE, SATURDAY, DECEMBER 4, 1880.

☞ Separate paging is given to this Part in order that it may be filed as a separate compilation.

PART IV.

Miscellaneous Papers.

ANNUAL EXHIBITION OF THE MADRAS AGRI-HORTICULTURAL SOCIETY, TO BE HELD EARLY IN FEBRUARY 1881.

EXTRA PRIZE LIST.

The Government having placed at the disposal of the Society a sum of 500 Rupees, they have much pleasure in offering the following prizes :—

The Prizes from I to IX inclusive will be open to the produce of the Madras Presidency, Hydrabad, Mysore, Coorg, Travancore and Cochin.

I.—Best sample of Coffee, not less than 20 lbs, of which 4 lbs. in parchment and 16 lbs. cleaned in three sizes, with 1 lb. of pea berry, a gold medal.
II.—Best sample of Tea, not less than 30 lbs., a gold medal.
III.—Second best sample of Tea, not less than 20 lbs., a silver medal.
IV.—Best sample of Indigo, not less than 5 lbs., a silver medal. Rs.
V.—Best sample of cured Tobacco, not less than 10 lbs., a silver medal and 20
IV.—Best cured sample of Country Tobacco, not less than 10 lbs 20

N. B.—All articles sent to compete for any of the above prizes must be accompanied by a written declaration from the Exhibitor, stating how many acres or cawnies of land he has had under cultivation, and that the sample exhibited is *bonâ fide* the produce of that land. Tea must be sent not later than the 15th December, and the other articles must be delivered at the Society's Garden, two days before the Show. Rs.

VII.—Best sample of Silk, not less than 1 lb. 25
VIII.—Best sample of Tussa Silk, not less than 1 lb. 25
IX.—The best general collection of produce usually exported from Madras. Each article to have its name and use separately given 50
X.—Best general collection of forest products, such as gums, oleo-resins, wax, dyes, &c. .. 20
XI.—Best collection of green forage 10
XII.—Prize offered by H. S. Thomas, Esq., F. L. S., &c. Best Tussa Silk-worm Fishing Gut, not less than twenty lengths 20

Conditions of Competitions.

1. All articles for competition, except Cut Flowers, Fruit and Vegetables, must arrive at the Gardens before 2 P. M. on the day previous to the Exhibition, accompanied by a sealed letter addressed to the Secretary containing a list of the articles sent, with the following certificate : "I hereby certify that the *Plants* or *Flowers* (as the case may be) sent by me for competition, have been under my care for the last two months; and have been grown by me.

2. It shall be competent for the Judges to reduce the amount of the prizes if, in their opinion, the articles exhibited do not merit the full sums.

3. No prize shall be awarded unless there are at least two competitors for it; except in the cases of rare excellence, when the Judges may specially award a prize.

4. When the prize list specifies the exact number of plants, &c., to be exhibited, no exhibitor shall be allowed to exhibit more.

5. Competitors for prizes must sort their own articles, and place them in the appointed places.

6. All articles sent for competition must be *bôna fide* the produce of, or have been raised by the exhibitor, and unless otherwise specified, must have been grown in Madras. The Judges may withhold any prize until proof of these conditions be produced.

7. No articles can compete for more than one prize.

8. All articles must be in full perfection, flowers in bloom.

9. Parties forwarding articles for exhibition and not for competition, will be kind enough to send information to that effect to the Honorary Secretary.

10. No articles sent for competition except strawberries, raspberries and figs are to be taken away until 6 P. M. on the day of Show, and they are then to be removed in such order as may be directed by the Honorary Secretary, and any gardener or other person found offering flowers for sale shall be summarily ejected.

JOSEPH STEAVENSON,
Honorary Secretary.

Mysore Government Press, Bangalore.—1880.

THE

MYSORE GAZETTE.

Published by Authority.

BANGALORE, SATURDAY, DECEMBER 11, 1880.

☞ Separate paging is given to this Part in order that it may be filed as a separate compilation.

PART IV.

Miscellaneous Papers.

ANNUAL EXHIBITION OF THE MADRAS AGRI-HORTICULTURAL SOCIETY, TO BE HELD EARLY IN FEBRUARY 1881.

EXTRA PRIZE LIST.

The Government having placed at the disposal of the Society a sum of 500 Rupees, they have much pleasure in offering the following prizes :—

The Prizes from I to IX inclusive will be open to the produce of the Madras Presidency, Hydrabad, Mysore, Coorg, Travancore and Cochin.

I.—Best sample of Coffee, not less than 20 lbs, of which 4 lbs. in parchment and 16 lbs. cleaned in three sizes, with 1 lb. of pea berry, a gold medal.
II.—Best sample of Tea, not less than 30 lbs., a gold medal.
III.—Second best sample of Tea, not less than 20 lbs., a silver medal.
IV.—Best sample of Indigo, not less than 5 lbs., a silver medal. Rs.
V.—Best sample of cured Tobacco, not less than 10 lbs., a silver medal and 20
IV.—Best cured sample of Country Tobacco, not less than 10 lbs 20

N. B.—All articles sent to compete for any of the above prizes must be accompanied by a written declaration from the Exhibitor, stating how many acres or cawnies of land he has had under cultivation, and that the sample exhibited is *bonâ fide* the produce of that land. Tea must be sent not later than the 15th December, and the other articles must be delivered at the Society's Garden, two days before the Show. Rs.

VII.—Best sample of Silk, not less than 1 lb. 25
VIII.—Best sample of Tussa Silk, not less than 1 lb. 25
IX.—The best general collection of produce usually exported from Madras. Each article to have its name and use separately given 50
X.—Best general collection of forest products, such as gums, oleo-resins, wax, dyes, &c. .. 20
XI.—Best collection of green forage 10
XII.—Prize offered by H. S. Thomas, Esq., F. L. S., &c. Best Tussa Silk-worm Fishing Gut, not less than twenty lengths 20

Conditions of Competitions.

1. All articles for competition, except Cut Flowers, Fruit and Vegetables, must arrive at the Gardens before 2 P. M. on the day previous to the Exhibition, accompanied by a sealed letter addressed to the Secretary containing a list of the articles sent, with the following certificate : " I hereby certify that the *Plants* or *Flowers* (as the case may be) sent by me for competition, have been under my care for the last two months; and have been grown by me.

2. It shall be competent for the Judges to reduce the amount of the prizes if, in their opinion, the articles exhibited do not merit the full sums.

3. No prize shall be awarded unless there are at least two competitors for it ; except in the cases of rare excellence, when the Judges may specially award a prize.

4. When the prize list specifies the exact number of plants, &c., to be exhibited, no exhibitor shall be allowed to exhibit more.

5. Competitors for prizes must sort their own articles, and place them in the appointed places.

6. All articles sent for competition must be *bôna fide* the produce of, or have been raised by the exhibitor, and unless otherwise specified, must have been grown in Madras. The Judges may withhold any prize until proof of these conditions be produced.

7. No articles can compete for more than one prize.

8. All articles must be in full perfection, flowers in bloom.

9. Parties forwarding articles for exhibition and not for competition, will be kind enough to send information to that effect to the Honorary Secretary.

10. No articles sent for competition except strawberries, raspberries and figs are to be taken away until 6 P. M. on the day of Show, and they are then to be removed in such order as may be directed by the Honorary Secretary, and any gardener or other person found offering flowers for sale shall be summarily ejected.

JOSEPH STEAVENSON,
Honorary Secretary.

Mysore Government Press, Bangalore.—1880.

570

THE

MYSORE GAZETTE

Published by Authority.

BANGALORE, SATURDAY, DECEMBER 18, 1880.

☞ Separate paging is given to this Part in order that it may be filed as a separate compilation.

PART IV.

Miscellaneous Papers.

ANNUAL EXHIBITION OF THE MADRAS AGRI-HORTICULTURAL SOCIETY, TO BE HELD EARLY IN FEBRUARY 1881.

EXTRA PRIZE LIST.

The Government having placed at the disposal of the Society a sum of 500 Rupees, they have much pleasure in offering the following prizes :—

The Prizes from I to IX inclusive will be open to the produce of the Madras Presidency, Hydrabad, Mysore, Coorg, Travancore and Cochin.

I.—Best sample of Coffee, not less than 20 lbs, of which 4 lbs. in parchment and 16 lbs. cleaned in three sizes, with 1 lb. of pea berry, a gold medal.
II.—Best sample of Tea, not less than 30 lbs., a gold medal.
III.—Second best sample of Tea, not less than 20 lbs., a silver medal.
IV.—Best sample of Indigo, not less than 5 lbs., a silver medal. Rs.
V.—Best sample of cured Tobacco, not less than 10 lbs., a silver medal and 20
IV.—Best cured sample of Country Tobacco, not less than 10 lbs 20

N. B.—All articles sent to compete for any of the above prizes must be accompanied by a written declaration from the Exhibitor, stating how many acres or cawnies of land he has had under cultivation, and that the sample exhibited is *bonâ fide* the produce of that land. Tea must be sent not later than the 15th December, and the other articles must be delivered at the Society's Garden, two days before the Show. Rs.

VII.—Best sample of Silk, not less than 1 lb. 25
VIII.—Best sample of Tussa Silk, not less than 1 lb. 25
IX.—The best general collection of produce usually exported from Madras. Each article to have its name and use separately given 50
X.—Best general collection of forest products, such as gums, oleo-resins, wax, dyes, &c. .. 20
XI.—Best collection of green forage 10
XII.—Prize offered by H. S. Thomas, Esq., F. L. S., &c. Best Tussa Silk-worm Fishing Gut, not less than twenty lengths 20

Conditions of Competitions.

1. All articles for competition, except Cut Flowers, Fruit and Vegetables, must arrive at the Gardens before 2 P. M. on the day previous to the Exhibition, accompanied by a sealed letter addressed to the Secretary containing a list of the articles sent, with the following certificate: "I hereby certify that the *Plants* or *Flowers* (as the case may be) sent by me for competition, have been under my care for the last two months; and have been grown by me.

2. It shall be competent for the Judges to reduce the amount of the prizes if, in their opinion, the articles exhibited do not merit the full sums.

3. No prize shall be awarded unless there are at least two competitors for it; except in the cases of rare excellence, when the Judges may specially award a prize.

4. When the prize list specifies the exact number of plants, &c., to be exhibited, no exhibitor shall be allowed to exhibit more.

5. Competitors for prizes must sort their own articles, and place them in the appointed places.

6. All articles sent for competition must be *bôna fide* the produce of, or have been raised by the exhibitor, and unless otherwise specified, must have been grown in Madras. The Judges may withhold any prize until proof of these conditions be produced.

7. No articles can compete for more than one prize.

8. All articles must be in full perfection, flowers in bloom.

9. Parties forwarding articles for exhibition and not for competition, will be kind enough to send information to that effect to the Honorary Secretary.

10. No articles sent for competition except strawberries, raspberries and figs are to be taken away until 6 P. M. on the day of Show, and they are then to be removed in such order as may be directed by the Honorary Secretary, and any gardener or other person found offering flowers for sale shall be summarily ejected.

JOSEPH STEAVENSON,
Honorary Secretary.

Mysore Government Press, Bangalore.—1880.

SUPPLEMENT TO THE

MYSORE GAZETTE.

No. 26 Published by Authority. of 1880.

BANGALORE, SATURDAY, JULY 3, 1880.

572

OFFICIAL PAPERS.

Abstract of Season or Intermediate Reports for the Week ending 26th June 1880.

Bangalore District.—Twenty-four cents of rain at Bangalore. Crops in good condition. Prospects favorable. More rain needed for sowing. Health good, but fever prevalent in some taluks; murrain among cattle abating. Prices slightly risen.

Kolar District.—Twenty-four cents of rain at Kolar. Standing crops withering in some parts. Want of rain much felt. Many tanks are dry. Agricultural operations much retarded. Prospects fair. Health generally good, but fever prevails. Cattle disease continues. Price of ragi fallen, that of rice stationary.

Túmkúr District.—Sixty cents of rain at Túmkúr. Standing young crops in good condition. Sowing operations still in progress. In some places punaji, harka, ragi and castor-oil seed were sown. Prospects good. Health generally good. Prices stationary.

Mysore District.—Sixteen cents of rain at Mysore. Cholam crops generally thriving. Prospects of season and public health good. Prices stationary.

Hassan District.—One inch, 35 cents of rain at Hassan. Rain needed for the ragi crop in the Channaraypatna and Narsipur Taluks. Prospects favorable. With the exception of the Hassan, Manjarabad and Haranhalli Taluks, where fever and dysentery prevailed, the public health was good. The losses from murrain were heavy, the disease having prevailed in all the taluks save Belur. Price of ragi risen; that of rice stationary.

Shimoga District.—Seventy-two cents of rain at Shimoga. Standing crops are doing well. Paddy being sown in all the taluks, and ragi in Shikarpur and Sorab. Prospects of season good. Public health fair, but fever and lung affections prevalent. Murrain among cattle abating. Prices generally stationary.

Kadur District.—Seventy-four cents of rain at Chikmagalur. Young crops doing well. Prospects of season and public health good. Fever prevalent in parts of the Banavar Taluk. Murrain prevalent in parts of the Tarikere Taluk. Prices stationary.

Chitaldroog District.—One inch, 40 cents of rain at District head-quarters. The rain-fall was general in the District. The young crops are generally in good condition. In parts of the Dodéri Taluk, the paddy crop was harvested. Prospects of season and public health good. Prices risen.

Coorg.—Eleven inches, 86 cents of rain. Rice sown in most parts. More rain wanted in Kiggatnad. Ragi thriving. Coffee prospects poor. Health fair.

By Order,

C. RANGACHARLU,
Revenue Secretary.

Prices Current of Food Grains in the Provinces of Mysore and Coorg during the Fortnight ending 15th June 1880.

QUANTITY PER RUPEE BY THE STANDARD SEERS OF 80 TOLAS, *vide* GOVERNMENT OF INDIA NO. 1—21, DATED 10TH FEBRUARY 1874.

Districts.	Shops.	Wheat. Present Fortnight.			Wheat. Past Fortnight.			Wheat. Corresponding Fortnight in 1879.			Barley. Present Fortnight.			Barley. Past Fortnight.			Barley. Corresponding Fortnight in 1879.			Rice, best sort. Present Fortnight.			Rice, best sort. Past Fortnight.			Rice, best sort. Corresponding Fortnight in 1879.			Rice, common. Present Fortnight.			Rice, common. Past Fortnight.			Rice, common. Corresponding Fortnight in 1879.		
		seers.	chittaks	s.	c.	s.	c.	s.	c.	s.	c.	s.	c.	s.	c.	s.	c.	s.	c.	s.	c.	s.	c.	s.	c.	s.	c.	s.	c.	s.	c.	s.	c.	s.	c.	s.	c.	s.	c.
1 Bangalore.	Wholesale.	8	4	8	7	7	4	9	2	8	14	7	15	10	10	11	4	8	10	11	4	12	4	9	10	26	0												
	Retail.	7	12	8	0	7	0	8	10	8	6	7	11	10	2	10	12	8	6	10	12	11	12	9	5	25	0												
2 Kolar.	Wholesale.							7	10	6	11	6	5	11	9	11	14	11	4	15	3	15	7	12	8														
	Retail.							7	6	6	7	6	2	11	5	11	10	11	0	14	15	15	3	12	3														
3 Tumkur	Wholesale.	6	8	6	8	6	8	9	0	9	0	6	8	13	0	13	0	10	8	14	0	14	0	11	8														
	Retail.	6	0	6	0	6	0	8	8	8	8	6	0	12	8	12	8	10	0	13	8	13	8	11	0														
4 Mysore	Wholesale.	7	4	7	8	4	4							11	7	11	12	10	4	12	0	12	4	11	4	32	8	31	0										
	Retail.	7	0	7	4	4	0							11	3	11	8	10	0	11	12	12	0	11	0	32	4	30	0										
5 Hassan	Wholesale.																																						
	Retail.	9	0	8	0	5	0	9	8	9	0	5	8	12	0	12	0	11	0	14	0	15	0	12	0														
6 Shimoga	Wholesale.																																						
	Retail.	6	9	6	5	4	3	7	6	6	13	5	4	12	10	12	10	8	6	13	8	13	11	12	9	25	3	27	5	18	14								
7 Kadur	Wholesale.																																						
	Retail.	9	0	10	0	5	0							12	0	13	0	11	0	16	0	15	0	13	0														
8 Chitaldroog.	Wholesale.	10	0	9	0	5	8	11	0	10	0	7	8	12	0	12	0	8	8	13	0	13	0	11	0	39	0	38	5	16	8	33	0	32	0	30	0	39	5
	Retail.	9	0	9	0	5	0	10	0	10	0	7	0	11	0	11	0	8	0	12	0	1	0	10	0	38	0	38	0	16	0	32	0	32	0	30	0	38	5
Average	Wholesale.	8	0	7	14	5	14	9	3	8	10	7	1	11	12	12	0	9	13	13	1	13	6	11	3	32	8	34	10	16	8	32	13	32	5	29	0	32	10
	Retail.	7	12	7	13	5	3	8	9	8	3	6	4	11	9	11	14	9	11	13	5	13	8	11	6	30	2	31	12	17	7	32	3	32	3	28	14	30	15
Coorg	Wholesale.																																						
	Retail.	5	13	6	10	5	9	6	6	6	12	5	13	10	8	10	14	8	12	15	12	16	2	13	3														

Districts.	Shops.	Great Millet, (Jola, Javar) *Holcus Sorghum.* Present Fortnight.			Great Millet. Past Fortnight.			Great Millet. Corresponding Fortnight in 1879.			Bulrush Millet, (Kambu, Bajra) *Penicillaria Spicata.* Present Fortnight.			Bulrush Millet. Past Fortnight.			Bulrush Millet. Corresponding Fortnight in 1879.			Lesser Millets, Ragi, &c., (Kavaru, Varagu, Save, China, Koralu, Marwa, Nagli, &c.) *Panicum Miliaceum, Eleusine, Coracana, &c.* Present Fortnight.			Lesser Millets. Past Fortnight.			Lesser Millets. Corresponding Fortnight in 1879.			Gram. Present Fortnight.			Gram. Past Fortnight.			Gram. Corresponding Fortnight in 1879.		
		s.	c.	s.	c.	s.	c.	s.	c.	s.	c.	s.	c.	s.	c.	s.	c.	s.	c.	s.	c.	s.	c.	s.	c.	s.	c.	s.	c.	s.	c.	s.	c.	s.	c.	s.	c.	s.	c.
1 Bangalore.	Wholesale.																						29	5	29	7	20	13	29	6	30	9	17	2				
	Retail.																						28	5	28	7	20	6	28	6	29	9	16	14	78	0	84	0
2 Kolar.	Wholesale.										32	10	32	10	27	15	28	2	31	3	22	15	34	8	34	8	20	12										
	Retail.										32	6	32	6	27	12	27	14	30	15	22	11	34	3	34	3	20	7	172	6	172	6	172	4	11	1	11	1
3 Tumkur	Wholesale.																34	0	34	0	14	8	34	0	34	0	21	0	360	0	360	0	140	0	10	0	10	0
	Retail.																33	0	33	0	13	8	33	0	33	0	20	0	340	0	340	0	130	0	9	8	9	8
4 Mysore	Wholesale.																32	4	31	8	25	8	30	4	28	8	21	0	81	0	81	0	96	0	7	12	7	12
	Retail.																32	0	31	0	25	0	30	0	28	0	20	0	78	0	78	0	90	0	7	8	7	8
5 Hassan	Wholesale.																																						
	Retail.																29	0	30	0	22	0	30	0	30	0	17	8	300	0	300	0	130	0	7	8	8	0
6 Shimoga	Wholesale.																																						
	Retail.	25	3	27	5	18	14										35	2	33	1	29	14	22	1	21	8	15	3	480	0	480	0	480	0	8	6	8	6
7 Kadur	Wholesale.																																						
	Retail.																24	0	26	0	24	0	22	0	25	0	14	0	60	0	60	0	60	0	9	0	9	0
8 Chitaldroog.	Wholesale.	39	0	38	5	16	8	33	0	32	0	30	0	39	5	37	8	26	8	28	8	29	0	16	4	100	0	100	0	100	0	8	4	8	0	7	8
	Retail.	38	0	38	0	16	0	32	0	32	0	30	0	38	5	37	0	26	0	28	0	28	0	16	0	100	0	100	0	100	0	8	0	8	0	7	0
Average	Wholesale.	32	8	34	10	16	8	32	13	32	5	29	0	32	10	32	12	22	1	31	5	31	5	19	4	180	5	180	5	112	0	9	10	9	9	9	5
	Retail.	30	2	31	12	17	7	32	3	32	3	28	14	30	15	31	3	22	15	28	7	28	10	17	8	263	9	264	5	155	12	8	14	8	15	8	11
Coorg	Wholesale.																28	0	29	5	25	7	23	6	24	9	19	2	110	0	110	0	110	0	8	4	8	4
	Retail.																																						

Districts.	Shops.	Firewood. Present Fortnight.			Firewood. Past Fortnight.			Firewood. Corresponding Fortnight in 1879.			Salt. Present Fortnight.			Salt. Past Fortnight.			Salt. Corresponding Fortnight in 1879.			Remarks.
		s.	c.	s.	c.	s.	c.	s.	c.	s.	c.	s.	c.	s.	c.	s.	c.	s.	c.	
1 Bangalore.	Wholesale.										10	12	10	12	10	14				
	Retail.										10	0	10	0	10	8				
2 Kolar.	Wholesale.										11	5	11	5	11	11				
	Retail.										11	1	11	1	11	7				
3 Tumkur	Wholesale.										10	0	10	0	8	8				
	Retail.										9	8	9	8	8	0				
4 Mysore	Wholesale.										7	0	7	0	8	0				
	Retail.										7	8	7	8	7	8				
5 Hassan	Wholesale.																			
	Retail.	800	0	800	0	130	0	7	8	8	0	7	8							
6 Shimoga	Wholesale.																			
	Retail.	480	0	480	0	480	0	8	6	8	6	8	6							
7 Kadur	Wholesale.																			
	Retail.	60	0	60	0	60	0	9	0	9	0	9	0							
8 Chitaldroog.	Wholesale.	100	0	100	0	100	0	8	4	8	0	7	8							
	Retail.	100	0	100	0	100	0	8	0	8	0	7	0							
Average	Wholesale.	180	5	180	5	112	0	9	10	9	9	9	5							
	Retail.	263	9	264	5	155	12	8	14	8	15	8	11							
Coorg	Wholesale.	110	0	110	0	110	0	8	4	8	4	8	8							
	Retail.																			

MYSORE CHIEF COMMISSIONER'S OFFICE,
BANGALORE, *22nd June* 1880.

By Order,

C. RANGACHARLU,
Revenue Secretary.

Mysore Government Press, Bangalore.—1880.

574

SUPPLEMENT TO THE

MYSORE GAZETTE.

No. 27 Published by Authority. of 1880.

BANGALORE, SATURDAY, JULY 10, 1880.

OFFICIAL PAPERS.

Abstract of Season or Intermediate Reports for the Week ending 3rd July 1880.

Bangalore District.—One inch, and 1 cent of rain at Bangalore. Crops in good condition, seasonable rain having fallen during the week. Prospects are very fair. Public health good. Cattle disease abating. Prices fallen.

Kolar District.—Twenty cents of rain at Kolar. No dry crop seeds have yet been sown in many parts. Those already sown are withering. Many fields are yet left unploughed. Public health generally good, but fever prevalent. Cattle disease continues to prevail. Prices stationary.

Túmkúr District.—One inch, 7 cents of rain at Túmkúr. Crops in good condition. Punaji, harka, and castor-oil seed being sown in parts. Prospects favorable. Public health good, but fever prevalent in 2 taluks. Prices stationary.

Mysore District.—Seventy-seven cents of rain at Mysore. Cholam crop generally thriving. Prospects of season and public health good. Prices stationary.

Hassan District.—Three inches, 80 cents of rain at Hassan. Paddy is being reaped in Haranhalli and transplanted in Manjarabad and Belur. Prospects good. Public health improving. Murrain prevalent in all taluks but Belur. Prices stationary.

Shimoga District.—Four inches, 49 cents of rain at Shimoga. Standing crops in good condition. Paddy seedlings are being transplanted in the Malnad Taluks, and ragi being sown everywhere. Prospects of season very good. Public health fair, fevers common to the season prevalent. Cattle suffer from foot and mouth disease. Prices stationary.

Kadur District.—Three inches, 18 cents of rain at Chikmagalur. All young crops in good condition. Prospects of season and public health good, but fever still prevalent in parts of the Banavar Taluk. Cattle disease continues in parts of the Tarikere Taluk. Prices stationary.

Chitaldroog District.—Two inches, 16 cents of rain at Chitaldroog. Rain fell in all parts of the District. The young crops are in good condition. Sowing progressing in all taluks. Prospects good. Fever prevalent in parts of the Chitaldroog and Hiriyur Taluks. Prices fallen.

Coorg.—Rain-fall 12 inches, 40 cents at Mercara. Rice seedlings and ragi thriving. Coffee prospects poor. Health fair.

By Order,

C. RANGACHARLU,
Revenue Secretary.

Mysore Government Press, Bangalore.—1880.

SUPPLEMENT TO THE

MYSORE GAZETTE.

No. 28 Published by Authority. of 1880.

BANGALORE, SATURDAY, JULY 17, 1880.

OFFICIAL PAPERS.

Abstract of Season or Intermediate Reports for the Week ending 10*th July* 1880.

Bangalore District.—Three inches, 25 cents of rain at Bangalore. Crops in good condition. Prospects very favorable. Public health good. Cattle disease abating. Price of ragi risen ; that of rice fallen.

Kolar District.—One inch, 46½ cents of rain at Kolar. Agricultural operations are now being carried on. The standing crops require more rain. The tanks are yet quite empty. Fever and murrain still prevalent. Prices stationary.

Túmkúr District.—One inch, 21 cents of rain at Túmkúr. Crops in good condition. Prospects favorable. Colds and cough prevalent. Prices stationary.

Mysore District.—Sixty-two cents of rain at Mysore. Standing crops thriving. Prospects of season and public health good. Prices stationary.

Hassan District.—One inch, 45 cents of rain at Hassan. Crops thriving. Paddy being sown in the Narsipur Taluk for the Kartika crop. Vaisak paddy crop reaped in the Channaraypatna Taluk. Prospects hopeful. Public health generally good. Cattle disease still prevalent, except in the Belur Taluk. Prices stationary.

Shimoga District.—One inch, 70 cents of rain at Shimoga. Standing crops in good condition. Agricultural operations progressing actively. Prospects very good. Public health fair. Fevers common to the season prevalent. There were 2 fatal cases of cholera in the village of Hosanad in the Nagar Taluk. Murrain still prevalent. Prices stationary.

Kadur District.—Three inches, 33 cents of rain at Chikmagalur. Crops in good condition. Prospects of season and public health good, but fever prevalent in parts of the Tarikere and Banavar Taluks, where also cattle disease prevails. Prices stationary.

Chitaldroog District.—Twenty-five cents of rain at Chitaldroog. Young crops in good condition. Preparations being made for further sowing. Prospects of season and public health good. Price of ragi fallen.

Coorg.—Rain-fall at Mercara 18 inches, 21 cents. Transplanting rice commenced. Ragi thriving. Coffee prospects poor. Health good.

By Order,
C. RANGACHARLU,
Revenue Secretary.

Prices Current of Food Grains in the Provinces of Mysore and Coorg during the Fortnight ending 30th June 1880.

QUANTITY PER RUPEE BY THE STANDARD SEERS OF 80 TOLAS, *vide* GOVERNMENT OF INDIA NO. 1—21, DATED 10TH FEBRUARY 1874.

| Districts. | Shops. | Wheat. Present Fortnight. | | Wheat. Past Fortnight. | | Wheat. Corresponding Fortnight in 1879. | | Barley. Present Fortnight. | | Barley. Past Fortnight. | | Barley. Corresponding Fortnight in 1879. | | Rice, best sort. Present Fortnight. | | Rice, best sort. Past Fortnight. | | Rice, best sort. Corresponding Fortnight in 1879. | | Rice, common. Present Fortnight. | | Rice, common. Past Fortnight. | | Rice, common. Corresponding Fortnight in 1879. | | Great Millet, (Jola, Javar) *Holcus Sorghum.* Present Fortnight. | | Great Millet. Past Fortnight. | | Great Millet. Corresponding Fortnight in 1879. | | Bulrush Millet, (Kambu, Bajra) *Penicillaria Spicata.* Present Fortnight. | | Bulrush Millet. Past Fortnight. | | Bulrush Millet. Corresponding Fortnight in 1879. | | Lesser Millets, Ragi, &c., (Kavaru, Varagu, Save, China, Koralu, Marwa, Nagli, &c.) *Panicum Miliaceum, Eleusine, Coracana, &c.* Present Fortnight. | | Lesser Millets. Past Fortnight. | | Lesser Millets. Corresponding Fortnight in 1879. | | Gram. Present Fortnight. | | Gram. Past Fortnight. | | Gram. Corresponding Fortnight in 1879. | | Firewood. Present Fortnight. | | Firewood. Past Fortnight. | | Firewood. Corresponding Fortnight in 1879. | | Salt. Present Fortnight. | | Salt. Past Fortnight. | | Salt. Corresponding Fortnight in 1879. | | Average wages per month. Able-bodied agricultural labourer. | Syce or Horse-keeper. | Common Mason, Carpenter or |
|---|---|---

SUPPLEMENT TO THE

MYSORE GAZETTE.

No. 29 Published by Authority. of 1880.

BANGALORE, SATURDAY, JULY 24, 1880.

577

OFFICIAL PAPERS.

Abstract of Season or Intermediate Reports for the Week ending 17th July 1880.

Bangalore District.—Rain-fall at head-quarters one cent. Crops in good condition. Prospects of the season favorable. Public health generally good. Fever prevalent in some parts. Prices slightly fluctuating.

Kolar District.—Rain-fall nil. Standing crops are withering in many parts. Many fields remain yet to be ploughed. Prospects not promising. Fever and murrain continue. Prices have slightly risen.

Túmkúr District.—Eighty-eight cents of rain at Túmkúr. Crops thriving, except in some parts of the Maddagiri and Sira Taluks where they are withering for want of rain. Prospects favorable. Public health good. Prices stationary.

Mysore District.—Twenty-seven cents of rain at Mysore. Standing crops thriving. Prospects good. Public health generally good. Four cases of cholera reported in the Chamrajnagar Taluk. Prices stationary.

Hassan District.—Rain-fall at head-quarters 58 cents. Crops in good condition, but rain is wanted for the jola crops in the Nagamangala Taluk. Prospects favorable. Public health fair. Cattle disease still prevalent. Prices fallen.

Shimoga District.—Eighty-three cents of rain at Shimoga. Standing crops in good condition, except in the Sorab Taluk, where ragi and sugar-cane suffer from excessive rain. Sowing of dry crops in active progress. Garden prospects fair, except in Kavaledurga where rot threatens the arecanut. Public health fair. Fever, measles, &c., prevalent. Cattle disease continues.

Kadur District.—Thirty-eight cents of rain at Chikmagalur. Crops in good condition. Prospects favorable. Public health generally good. Cattle disease continues in parts of the Tarikere Taluk. Prices stationary.

Chitaldroog District.—Six cents of rain at Chitaldroog. Standing crops in good condition. Sowing continued in all parts. Prospects good. Fever, ague, &c., generally prevalent. Murrain prevalent among cattle in the Dodéri Taluk. Prices stationary.

Coorg.—Rain-fall 7 inches 87 cents. Transplanting of rice in progress. Ragi thriving. Coffee prospects poor. Health good.

By Order,

C. RANGACHARLU,
Revenue Secretary.

Mysore Government Press, Bangalore.—1880.

SUPPLEMENT TO THE

MYSORE GAZETTE.

No. 30 — Published by Authority. — of 1880.

BANGALORE, SATURDAY, JULY 31, 1880.

Statement shewing the Number of Prisoners who have escaped from the Jails in Mysore and Coorg and who remain uncaptured.

Jail.	No. in Jail Register.	Name of Prisoner.	Age.	Father's Name.	Caste and Profession.	Residence.	Court awarding sentence.	Crime.	Date and period of sentence.	Date of escape.	Remarks.	Reward offered for capture of, or for giving such information as would lead to the capture of, escaped convicts.
Bangalore Central Jail.	2282	Basva ...	...	Basva Mallaiya.	Sivayit, cultivator.	Chamrajnagar.	...	Escape and administering stupefying drug.	9th April 1866, 6 years.	4th June 1868.	Bamboo color, teeth prominent, lost an upper tooth, scar under right eye, slight man.	...
	4457	Kondiga ...	...	Venkatramanappa.	Telugu Banajiga, cultivator.	Guttahalli, Gudibanda Taluk.	...	Criminal trespass.	23rd July 1868, 3 years.	30th August 1868.	...	...
	1265	Muniya ...	...	Baiyanna ...	Do gardener.	Hoskote ...	...	Grievous hurt amounting to murder.	8th March 1865, 6½ years.	9th October 1869.	Short and sickly complexion, dark marks of small-pox on the face, small eyes, vacant expression.	...
	6528	Venkataboyi	...	Venkata ...	Waddar, cultivator.	Karigidapalya, Magadi Taluk.	... ...	Dacoity with murder.	23rd December 1871, 10 years.	27th August 1876.	Coarse features, scar under the right eye and on back of right fore-arm, a long fresh burnt scar on his right thigh.	...
	8358	Venkata *alias* Ramasami.	...	Krishnappa (on first conviction, father's name Tirumala.)	Waddar (said before he was a Bedar.)	Yekasipalli of Papanpalli Taluk.	...	House breaking by night.	6th Nov. 1874, 10 years.	Do	Irregular features, pitted with small-pox, tattu marks on right shoulder, scar on back of left thigh, a large fresh burnt mark on left fore-arm, recommittal having spent 2 years in Jail before, and was released on 2nd August 1873.	...

578

Jail.	No. in Jail Register.	Name of Prisoner.	Age.	Father's Name.	Caste and Profession.	Residence.	Court awarding sentence.	Crime.	Date and period of sentence.	Date of escape.	Remarks.	Reward offered for capture of, or for giving such information as would lead to the capture of, escaped convicts.
	9159	Guruva ...	...	Timmaboyi.	Waddar, cultivator.	Jajur, Nelmangala Taluk.	...	Dacoity.	5th July 1876, 7 years.	5th Nov. 1877.	Small features, short nose, heavy eyebrows, a vertical scar $1\frac{3}{4}$ inches on forehead, a dark stain on left cheek-bone, a small mole outside right eye, skin on front of chest and abdomen and back mottled, a shining scar on back of left thigh, two scars on calf of right leg.	...
	1959	Mara ...	...	Channa ...	Balagai, weaver.	Munre, Nelamangala Taluk.	...	Dacoity.	8th Nov. 1877, 7 years.	3rd May 1879.	A small wart over centre of forehead, an irregular scar back of head near nape.	30 Rs. reward offered.
	9211	Muttusami.	...	Ramasami Pille.	Vellala Vakkaligar.	Madras ...	...	Theft.	29th August 1876, 6 months.	26th Oct. 1876.	A mole or wart at back of neck about 2 inches to the left of spine, a large oval scar in the middle of left thigh posteriorly, a scar on the right breast bone, a longitudinal small scar on and above right eye-brow.	25 do
	306	Guruva ...	...	Guruva ...	Waddar, cultivator.	Magadi Kasba.	...	House breaking by night and theft.	28th March 1877, $2\frac{1}{2}$ years.	28th Sep. 1877.	Face pock marked, scar front of each thigh about its upper hind.	...
	9415	Dodhanuma..		Nanjaiya ...	Dombar, Comb-maker.	Dombarpalya, Magadi Taluk.	...	Lurking house trespass.	31st Oct. 1876, $2\frac{1}{2}$ years.	2nd July 1878.	Large mouth, rather prominent varicose vein of left leg.	...
	3031	Ranoji ...	...	Akkoji Rao.	Mahratta, horse-keeper.	Dodballapur Kasba.	...	Theft by a servant.	18th June 1878, 2 years.	7th August 1878.	Face mottled, scars over nape of neck, scars over middle of spinal column.	...
	3262	Muniya ...	...	Annaboyi ...	Waddar, stone-cutter.	Mayasandra, Anekal Taluk.	...	House breaking and theft.	7th Aug. 1878, 1 year.	22nd Dec. 1878.	Scar over right nipple, bears marks of cat-o'nine-tails over left shoulder-blade.	25 Rs. reward offered.
	2946	Malla ...	...	Basanna ...	Sivachar, weaver.	Kankanhalli.	..	Robbery.	1st June 1878, $1\frac{1}{2}$ years.	31st Dec. 1878.	Square face, front upper teeth prominent, scar over left thigh posteriorly, 2 moles near right angle of mouth.	...

...	Baliga ...	25	Andanna ...	Telugu Balaji, ryot.	Maidarvanpalli, Hindupur Taluk, Her Majesty's Territory.	District Magistrate, Kolar.	Robbery, Section 392, I. P. C.	26th November 1875, 3 years.	23rd December 1875.	Blackish-brown color, scars of itches on the legs slightly stooping, descriptive roll published in *Mysore Gazette*, dated 15th January 1876.	...
...	Anur Munigа.	28	Sitaga ...	Bedar, trader	Dodballapur, Kolar Taluk.	1st Class Magistrate, Kolar Sub-Division.	Do	31st October 1877, 2 years.	13th December 1878.	Red color, long face, scar of a boil over the division of the left hand.	...
3420	Dudiga ...	...	Kormar Venkata.	Kormar, trader.	Channarayapatna.	Sessions Judge, Ashtagram.	Dacoity.	6th August 1872, 7 years.	25th February 1874.	Complexion black, hair black, eyes black, small burnt scars on both shoulders around, tattu mark on left shoulder, a small tumour on hip joint, place of residence Mandya, caste and profession Kormar, trader.	...
3422	Raju ...	...	Muniya ...	Do	Do	Do	Do	Do	Do	Complexion black, hair black, eyes black, a scar on neck, two scars above left hip joint, a scar on left thigh, residence Mandya, caste and profession Kormar, trader.	...
3729	Ambraiya ...	...	Ambraiya ...	Lambani, merchant.	Malvalli ...	Do	Do	7th August 1873, 10 years.	Do	Complexion dark-brown, hair black, eyes black, 2 small moles on the forehead, one on the right side of the eye, one on the left side of the nose, also several moles on the chest, a large scar on the left side of the back, residence Malvalli, caste and profession Lambani merchant.	...
3833	Venkata ...	...	Venkata ...	Vakkaliga, laborer.	Hassan ...	Hassan District Magistrate.	House breaking by night.	24th October 1873, 5 years.	Do	Complexion dark-brown, hair black, eyes light, nails of both great toes deceased, residence Hassan, caste and profession Vakkaliga, laborer.	...
4558	Giriyaboyi ...	...	Channaboyi.	Waddar, cooly.	Heggaddevankote.	Mysore District Magistrate.	Do	18th October 1875, 4 years.	23rd January 1876.	Complexion fair, hair black, eyes black, a large scar on the abdomen below the navel, 2 burnt scars on both sides of the chest, residence Heggaddevankote, caste and profession Waddar, cooly.	...
6817	Deva ...	...	Marigauda.	Vakkaliga, ryot.	Palhalli, Ashtagram Taluk.	1st Class Magistrate, Mandya Sub-Division.	Escape from custody and theft.	2nd July 1878, 1½ years and 10 months in two cases.	11th do 1879.	Color brown, 2 scars on right temple, 2 scars just below right knee-cap, residence Palhalli, Patna Ashtagram Taluk, caste and profession Vakkaliga, ryot.	25 Rs. reward offered.

Jail.	No. in Jail Register.	Name of Prisoner.	Age.	Father's Name.	Caste and Profession.	Residence.	Court awarding sentence.	Crime.	Date and period of sentence.	Date of escape.	Remarks.	Reward offered for capture of, or for giving such information as would lead to the capture of, escaped convicts.
Mysore and Kukarhalli Jails. (Concluded)	7791	Dinnur Ira.	...	Ira ...	Teluga, gardener.	Betmangala.	Sessions Judge, Nundydroog.	Dacoity ...	30th April 1878, 3 years.	23rd July 1879.	Escaped from Kukarhalli Jail, color dark brown, small forehead, deep seated eyes, wide nostrils, 2 white scars on back of head, residence Betmangala, caste and profession Teluga, gardener.	25 Rs. reward offered.
	7362	Basva ...	...	Kempaiya ...	Ganigar, laborer.	Hebbe, Nanjangúd Taluk.	1st Class Magistrate, Nanjangúd and Sessions Judge, Ashtagram.	Escape from custody and theft.	26th March 1879, 8 years.	8th November 1879.	Color dark brown, scars on either temple, a scar on centre of forehead, a scar on back and about the middle of right thigh, 2 raised scars on outer part of right calf, either row of teeth irregular, residence Hebbe, Nanjangúd Taluk, caste and profession Ganigar, laborer.	Do
	8004	Venkatachari.	...	Krishnamachari.	Sri-Vaishnava Brahman, ryot.	Chikballapur	Kolar Deputy Commissioner.	Robbery ...	14th September 1878, 4 years.	12th February 1880.	Color dark, oval face, scars over left thigh, scars over dorsum of right foot, residence Chikballapur, caste and profession Sri-Vaishnava Brahman, ryot.	Do
	...	Marigauda.	35	Maraiya ...	Vakkaligar, ryot.	Bilion, Channaraypatna Taluk.	District Magistrate, Hassan.	Dacoity, 395, I. P. C.	2 years' rigorous imprisonment.	2nd February 1877.	Copper color, very hairy man, gray eyes.	...
	250	Kivada ...	28	Dodhuduga.	Paraiya, ryot.	Chik. Hanusoge, Arkalgúd Taluk.	Judl. Asstt. and 1st Class Magistrate, Hassan.	Sections 379, and 324, I. P. C.	19th June 1877, 18 months.	June 1877.	Face long, color light-dark, small-pox marks on face.	...
	458	Ranga ...	40	Domi Dyava.	Paraiya, ryot.	Hassan Kasba.	Sessions Court of Ashtagram.	Sections 375, and 75, I. P. C.	10th November 1877, 5 years.	24th November 1877.	Color white, round face, bristly mustaches, red eyes, tall man.	...
	386	Malla ...	25	Govinda ...	Lambani, cultivator.	Podermati, Channagiri.	Sessions Judge, Nagar.	Receiving stolen property.	15th February 1865, 10 years.	30th January 1867.	...	...
	406	Marulappa.	25	Siddappa ...	Lingayat, cultivator.	Mohanur, Ranibenrur.	Do	Forgery ...	20th do 5 years.	20th March 1865.	...	...

491	Timma ...	25	Mallappa ...	Bedar, cultivator.	Bagur, Hosdurga Taluk.	Deputy Commissioner, Chitaldroog.	Theft and escape from lawful custody.	2nd December 1864, 1 year and 6 months.	11th December 1865.	...	...
746	Belra ...	45	Ramji ...	Lambani, cooly.	Aldahalli, Kadur Taluk.	Sessions Judge, Nagar Division.	Robbery.	4th Jan. 1866, 5 years.	26th March 1866.	...	...
931	Iraiya ...	28	Rudrappa ...	Lingayat, cultivator.	Gopanhalli, Channagiri Taluk.	Do	Fraudulent destruction of a document.	22nd May 1866, 3 years.	29th June 1866.	...	...
1190	Kuruda ...	25	Malla ...	Madigar, cooly.	Bellakere, Harihar Taluk.	Do	Dacoity.	27th September 1866, 5 years.	11th January 1867.	...	...
1361	Karjagaiya.	25	Bhadraiya...	Lingayat, cultivator.	Beharalu, Anantapur Taluk.	Do	Do	21st December 1866, 5 years.	11th June 1867.	...	...
1394	Timma ...	35	Hanumanta.	Korchar, trader.	Magulahatta, Kadur Taluk.	Do	Do	21st do 7 year's transportation.	21st March 1867.	...	...
1395	G. Naga ...	60	Naga ...	Do	Do	Do	Do	Do	Do	...	...
1712	Ramasingh.	32	Kandusingh.	Rajput, cultivator.	Maddanahal, Channagiri Taluk.	Do	Administering stupefying drugs and theft.	15th October 1867, 10 years.	30th November 1869.	...	...
3673	Ganga ...	35	Gurva ...	Korchar, cooly.	Kamballi, Hiriyur Taluk.	Do	Dacoity.	2nd December 1874, 7 years.	16th January 1875.	Complexion black, eyes brown, a burnt scar 4½ × 4 inches on the back, 2 small moles on the left thumb.	...
3890	Doddabuddu	30	Kasimkhan.	Musalman, cooly.	Hiriyur, Shimoga Taluk.	Shimoga Deputy Commr.	Do	25th November 1875, 5 years.	17th December 1875.	Color brown, eyes ditto, high cheek bones, a small mole between shoulders, a scar in front of right arm.	...

582

No. in Jail Register.	Name of Prisoner.	Age.	Father's Name.	Caste and Profession.	Residence.	Court awarding sentence.	Crime.	Date and period of sentence.	Date of escape.	Remarks.	Reward offered for capture of, or for giving such information as would lead to the capture of, escaped convicts.
4416	Haja ...	33	Tavaraiya ...	Lambani ..	Partikoppa, Shikarpur Taluk.	Shimoga Deputy Commr.	Dacoity ...	10th January 1877, 5 years.	14th August 1877.	A strong built man, square shoulder, color light-brown, eyes ditto, narrow forehead, a superficial scar on the back or left forearm.	..
4585	Chelva ...	30	Yellappa ...	Kunchi Gollar, cultivator.	Aruhalli, Honnali.	Sessions Judge, Nagar Division.	Dacoity with murder.	3rd May 1877, transportation for life.	3rd January 1878.	A spare built man, color brown, eyes dark brown, a small deep scar on the forehead, 3 small black moles on the right side of the neck.	50 Rs. reward offered.
4587	Babiga ...	46	Hanumanta.	Do	Bagapur ...	Do	Do	Do	Do	A strong made old man of brown color, eyes brown-dark, a depressed scar 1¾ inches above the right eyebrow, a superficial scar on the right side of the neck.	Do
6057	Lalaiya ...	25	Lalaiya ...	Lambani, cooly.	Mangapur, Shimoga Taluk.	Shimoga Deputy Commissioner.	Theft.	6th February 1879, 2 years.	8th March 1879.	A strong made man of dark color and eyes brown, a large ulcer in the upper and interior part of left thigh, pits of small-pox slightly marked on the face.	...
...	Ramaboyi ...	30	Hanumaboyi.	Waddar ...	Kabali, Banavar Taluk.	...	Section 395, I. P. C.	...	...	...	...
...	Venkata ...	25	Timmaboyi.	Do	Do	...	Do	...	...	...	...
158 of 871	Asatiganga.	35	Naga ...	Korchar ...	Harnhalli.	Deputy Superintendent, Chitaldroog.	Sections 457 and 411, I. P. C.	13th December 1870, 2 years.	3rd July 1871.	Brown color, a black mark on the left shoulder.	...
9 of 1872	Timdasari ...	24	Bhimadasari.	Telugubanajigar.	Gajalamandya.	...	Section 395, I. P. C.	3rd January 1872, 2 years.	16th February 1872.	Brown color, long face, mark of a burn on the sides of both eyes.	...
451 of 1876	Papga ...	40	Sidda ...	Waddar ...	Basavapur, Chitaldroog Taluk.	...	Do	29th August 1876, 5 years.	1st December 1876.	Mark of a wound on the left side of the leg.	...
732 of 1877	Bacha Mada.	38	Chaudappa.	Bedar ...	Vallur, Pavagada Taluk.	...	Section 397, I. P. C.	18th August 1877, 7 years.	8th December 1877.	Black color, round face.	...

District Jail	1070 of 1877	Hutcha ...	20	Mada ...	Bedar ...	Doganahalu, Hosdurga Taluk.	...	Section 457, I. P. C.	25th July 1877, 6 months.	17th September 1877.	Brown color, long face, a mark on the left shoulder.	...
	174 of 1874	Ganga ...	40	Guruva ...	...	Kurabahalli, Hiriyur Taluk.	Commissioner, Nagar.	Sections 395 and 397, I. P. C.	2nd December 1874, 7 years.	14th February 1874.	Black color, long face, a black mark on the back.	...
	111	Jori ...	...	...	...	Tavalgere-murunad.	...	Dacoity ..	5 years ...	27th July 1870.	Long face, a distinct scar below the right ear, a small tumour on the right hip-joint, three scars on upper part of right shin-bone, a scar on the inner side of right thigh, complexion dark, height 5 feet 4½ inches.	...
	112	Aramba ...	...	...	...	Hutugatnad..	...	Do	Do	Do	One small scar on the right side of the nose, a small indistinct scar on the left side of the forehead, two distinct scars at outer aspect of left thigh, a scar on the right knee-cap, complexion dark, height 5 feet 4 inches.	...
	129	Kuraiya ...	...	...	...	Mahadeopet.	...	Theft after previous conviction.	Do	25th September 1872.	Round face, which is slightly marked with small-pox, three large scars on the right knee-cap, a scar on the right instep and one at the inner side of right knee-joint, complexion brown, height 5 feet 10 inches.	...
	199	Channa Basava	...	...	..	Nidta Hobli.	...	Dacoity ...	10 years ...	Do	Face deeply marked with small-pox, a flower in the left eye, 3 cuts on the head, a mole on the right shoulder, 3 indistinct scars on the lower part of right leg, and two on the left foot, complexion brown, height 5 feet 7 inches.	...
	230	Ira ...	...	...	...	Mercara ...	...	Kidnapping.	5 years ...	Do	A verticle cut on the inner angle of the left eye-brow, a scar on the crown of the head, a horizontal narrow scar below the left eye, a mark about 2 inches above the navel, and a small one on the dorsum of left foot, complexion dark, height 5 feet 7 inches.	...

584

Jail.	No. in Jail Register.	Name of Prisoner.	Age.	Father's Name.	Caste and Profession.	Residence.	Court awarding sentence.	Crime.	Date and period of sentence.	Date of escape.	Remarks.	Reward offered for capture of, or for giving such information as would lead to the capture of, escaped convicts.
	270	Adamkhan.	...	...	...	Cabul ...	...	Dacoity ...	5 years ...	25th November 1878.	Hairy chest, a small scar at about centre of forehead, but more to the left, a mole at right side of neck, but more to the front, a mole on top of right shoulder, another on right side of belly, a scar a little above the right knee-cap, complexion fair, height 5 feet 4½ inches.	...
	271	Bilalkhan ...	...	...	...	Do	...	Do	Do	Do	A long semi-circular scar immediately below the left eye, bald headed, centre of chest hairy, scattered moles on right cheek, 10 scattered moles all about the region of the chest and belly, complexion dark-brown, height 5 feet 4½ inches.	...
	272	Mahomed Amin.	...	...	..	Do	...	Do	Do	Do	A small black mole on left cheek and one on right cheek, another a little below left collar-bone, and one at front of chest, a scar at centre of right fore-arm at its outer aspect, a long scar at root of first finger of left hand, a somewhat round scar at the joint of right thumb, a scar at inner side of left shin, complexion fair, height 5 feet 8 inches.	...

J. D. SANDFORD,
Inspector General of Prisons.

Mysore Government Press, Bangalore—1880.

SECOND SUPPLEMENT TO THE

MYSORE GAZETTE.

No. 30 Published by Authority. of 1880.

BANGALORE, SATURDAY, JULY 31, 1880.

586

OFFICIAL PAPERS.

Abstract of Season or Intermediate Reports for the Week ending 24th July 1880.

Bangalore District.—One inch 27 cents of rain at Bangalore. Crops in good condition. Prospects favorable. Public health generally good, but fever prevalent in some parts of the District. Prices stationary.

Kolar District.—One inch 10 cents of rain at Kolar. The rain which fell during the week saved the young dry crops for the present. More rain needed. Prospects still uncertain. The tanks are yet quite empty and the season for sowing paddy for the Kartika crop is fast closing. Fever and murrain still prevalent. Prices stationary.

Túmkúr District.—Seventy-three cents of rain at Túmkúr. Want of rain much felt in the Sira and Maddagiri Taluks, and the young crops are not in good condition. There has been no sowing as yet in several parts of the District. Prospects not bad. Public health good.

Mysore District.—One and half cents of rain at Mysore. Standing crops thriving. Prospects of season and public health good. Prices stationary.

Hassan District.—Eighty-five cents of rain at Hassan. Crops in good condition, except in the Channaraypatna, Nagamangala and Haranhalli Taluks, where they are in a backward state from want of rain. Prospects of season and public health good. Ague and fever prevalent in the Hassan and Nagamangala Taluks, and small-pox in the latter Taluk. Dod roga abating in the District, except in the Channaraypatna Taluk, where it is on the increase. Prices stationary.

Shimoga District.—One inch 14 cents of rain at Shimoga. Standing crops in good condition. Sowing of dry crops still continues. Arecanut crops suffer from rot in the Taluks of Ságar and Kavalédurga. Prospects good. Health fair; malarial fevers and lung affections prevalent. Murrain abating. Prices stationary.

Kadur District.—Eighty-eight cents of rain at Chikmagalur. Crops in good condition. Prospects of season and public health good. Fever and cattle disease prevalent in parts of the Tarikere Taluk. Prices stationary.

Chitaldroog District.—Sixteen cents of rain at Chitaldroog. Young crops in good condition. Sowing continued. Prospects of season fair. Public health good. Price of rice stationary; that of ragi fallen.

Coorg.—Rain-fall 10 inches 92 cents. Transplanting of rice continues. Ragi thriving. Coffee prospects poor. Health good.

By Order,

C. RANGACHARLU,
Revenue Secretary.

Mysore Government Press, Bangalore.—1880.

Prices Current of Food Grains in the Provinces of Mysore and Coorg during the Fortnight ending 15th July 1880.

QUANTITY PER RUPEE BY THE STANDARD SEERS OF 80 TOLAS, *vide* GOVERNMENT OF INDIA NO. 1—21, DATED 10TH FEBRUARY 1874.

Fortnight ending—	No.	Districts.	Shops.	Wheat. Present Fortnight.		Wheat. Past Fortnight.		Wheat. Corresponding Fortnight in 1879.		Barley. Present Fortnight.		Barley. Past Fortnight.		Barley. Corresponding Fortnight in 1879.		Rice, best sort. Present Fortnight.		Rice, best sort. Past Fortnight.		Rice, best sort. Corresponding Fortnight in 1879.		Rice, common. Present Fortnight.		Rice, common. Past Fortnight.		Rice, common. Corresponding Fortnight in 1879.	
				seers.	chittaks.	s.	c.	s.	c.	s.	c.	s.	c.	s.	c.	s.	c.	s.	c.	s.	c.	s.	c.	s.	c.	s.	c.
15th July 1880.	1	Bangalore.	Wholesale.	8	13	9	4	6	7	9	9	10	0	8	3	10	11	10	12	9	11	12	1	12	0	11	0
			Retail.	8	5	8	12	6	3	9	1	9	7	7	15	10	4	10	3	9	7	11	9	11	8	10	12
	2	Kolar. ...	Wholesale.	...	...	...	...	...	...	7	10	7	10	6	0	11	13	12	1	11	0	14	15	14	15	12	8
			Retail.	...	...	...	...	...	...	7	6	7	6	5	12	11	9	11	13	10	12	14	10	14	10	12	4
	3	Túmkúr ...	Wholesale.	6	8	6	8	7	0	9	0	9	0	6	8	12	8	12	8	11	8	13	8	13	8	12	8
			Retail.	6	0	6	0	6	8	8	8	8	8	6	0	12	0	12	0	11	0	13	0	13	0	12	0
	4	Mysore ...	Wholesale.	7	4	7	0	4	4	...	...	...	...	...	...	11	8	11	8	10	0	12	6	12	6	10	4
			Retail.	7	0	6	12	4	0	...	...	...	...	...	...	11	5	11	5	9	12	12	2	12	2	10	0
	5	Hassan ...	Wholesale.	...	...	...	...	...	...	...	...	...	...	...	...	...	...	...	...	...	...	...	...	...	...	...	...
			Retail.	9	0	9	8	5	0	9	0	10	0	6	0	13	0	12	0	10	0	14	0	12	8	11	0
	6	Shimoga ...	Wholesale.	...	...	...	...	...	...	...	...	...	...	...	...	...	...	...	...	...	...	...	...	...	...	...	...
			Retail.	6	13	6	9	4	7	8	6	7	6	5	4	12	10	12	10	8	6	14	11	13	11	12	9
	7	Kadur ...	Wholesale.	...	...	...	...	...	...	...	...	...	...	...	...	...	...	...	...	...	...	...	...	...	...	...	...
			Retail.	10	0	9	0	5	0	...	...	...	...	...	...	12	0	11	8	11	0	15	0	15	0	13	0
	8	Chitaldroog.	Wholesale.	9	0	10	0	5	4	10	0	11	0	6	4	12	0	12	0	11	0	14	0	13	0	13	0
			Retail.	9	0	9	0	5	0	10	0	10	0	6	0	11	0	11	0	10	0	13	0	12	0	12	0
		Average ...	Wholesale.	7	14	8	3	5	12	9	1	9	6	6	12	11	11	11	12	10	10	13	6	13	3	11	14
			Retail.	8	0	7	15	5	3	8	11	8	12	6	2	11	11	11	9	10	1	13	8	13	1	11	11
		Coorg ...	Wholesale.	...	...	...	...	...	...	...	...	...	...	...	...	...	...	...	...	...	...	...	...	...	...	...	...
			Retail.	6	0	5	13	5	9	6	9	6	4	5	6	10	6	10	8	9	0	14	13	15	13	13	1

Fortnight ending—	No.	Districts.	Shops.	Great Millet, (Jola, Javar) *Holcus Sorghum.* Present Fortnight.		Great Millet. Past Fortnight.		Great Millet. Corresponding Fortnight in 1879.		Bulrush Millet, (Kambu, Bajra) *Penicillaria Spicata.* Present Fortnight.		Bulrush Millet. Past Fortnight.		Bulrush Millet. Corresponding Fortnight in 1879.		Lesser Millets, Ragi, &c., (Kavaru, Varagu, Save, China, Koralu, Marwa, Nagli, &c.) *Panicum Miliaceum, Eleusine, Coracana, &c.* Present Fortnight.		Lesser Millets. Past Fortnight.		Lesser Millets. Corresponding Fortnight in 1879.		Gram. Present Fortnight.		Gram. Past Fortnight.		Gram. Corresponding Fortnight in 1879.		Firewood. Present Fortnight.		Firewood. Past Fortnight.		Firewood. Corresponding Fortnight in 1879.		Salt. Present Fortnight.		Salt. Past Fortnight.		Salt. Corresponding Fortnight in 1879.	
				s.	c.	s.	c.	s.	c.	s.	c.	s.	c.	s.	c.	s.	c.	s.	c.	s.	c.	s.	c.	s.	c.	s.	c.	s.	c.	s.	c.	s.	c.	s.	c.	s.	c.	s.	c.	s.	c.
15th July 1880.	1	Bangalore.	Wholesale.	22	5	21	12	18	6	...	...	...	...	...	...	28	8	28	2	22	10	29	4	29	8	18	8	...	...	...	...	...	...	10	12	10	12	11	4
			Retail.	21	5	20	14	17	11	...	...	...	...	...	...	27	8	27	2	22	1	28	3	28	12	18	3	84	0	78	0	84	0	10	0	10	0	11	0
	2	Kolar. ...	Wholesale.	...	...	...	...	...	...	32	10	32	10	27	15	29	2	28	2	22	15	34	8	34	8	20	12	...	...	...	...	...	...	11	5	11	5	11	5
			Retail.	...	...	...	...	...	...	32	6	32	6	27	12	28	14	27	14	22	10	34	3	34	3	20	7	172	6	172	6	172	4	11	1	11	1	11	1
	3	Túmkúr ...	Wholesale.	...	...	...	...	...	...	...	...	...	...	...	...	34	0	34	0	15	4	34	0	34	0	20	0	360	0	360	0	140	0	9	8	9	8	9	0
			Retail.	...	...	...	...	...	...	...	...	...	...	...	...	33	0	33	0	14	8	33	0	33	0	19	0	340	0	340	0	130	0	9	0	9	0	8	0
	4	Mysore ...	Wholesale.	...	...	33	8	...	...	...	...	...	...	...	...	31	0	31	0	23	8	30	4	31	0	21	0	81	0	81	0	84	0	7	4	8	0	7	12
			Retail.	...	...	33	5	...	...	...	...	...	...	...	...	30	12	30	0	23	0	30	0	30	9	20	0	78	0	78	0	78	0	7	0	7	12	7	8
	5	Hassan ...	Wholesale.	...	...	...	...	...	...	...	...	...	...	...	...	...	...	...	...	...	...	...	...	...	...	...	...	...	...	...	...	...	...	...	...	...	...	...	...
			Retail.	...	...	...	...	...	...	...	...	...	...	...	...	30	0	26	0	22	0	30	0	28	0	20	0	800	0	800	0	128	0	7	0	7	0	7	8
	6	Shimoga ...	Wholesale.	...	...	...	...	...	...	...	...	...	...	...	...	...	...	...	...	...	...	...	...	...	...	...	...	...	...	...	...	...	...	...	...	...	...	...	...
			Retail.	25	3	25	3	18	14	...	...	...	...	...	...	33	1	35	2	30	15	22	1	22	1	16	4	480	0	480	0	480	0	8	6	8	6	7	5
	7	Kadur ...	Wholesale.	...	...	...	...	...	...	...	...	...	...	...	...	...	...	...	...	...	...	...	...	...	...	...	...	...	...	...	...	...	...	...	...	...	...	...	...
			Retail.	...	...	...	...	...	...	...	...	...	...	...	...	25	0	25	0	24	0	23	0	23	0	15	0	60	0	60	0	60	0	9	0	9	0	9	0
	8	Chitaldroog.	Wholesale.	33	0	39	0	18	0	33	0	33	0	20	0	36	0	38	1	27	10	29	0	29	0	17	8	100	0	100	0	100	0	9	0	9	0	9	0
			Retail.	32	0	38	0	17	0	32	0	32	0	20	0	35	0	38	0	27	5	28	0	28	0	17	0	100	0	100	0	100	0	9	0	8	0	8	0
		Average ...	Wholesale.	27	10	31	7	18	3	32	13	32	13	24	0	31	12	31	14	22	6	31	6	31	10	19	9	180	5	180	5	108	0	9	9	9	11	9	11
			Retail.	26	3	29	5	17	14	32	3	32	3	23	14	30	6	30	4	23	5	28	9	28	7	18	4	264	5	263	9	154	0	8	13	8	12	8	11
		Coorg ...	Wholesale.	...	...	...	...	...	...	...	...	...	...	...	...	...	...	...	...	...	...	...	...	...	...	...	...	...	...	...	...	...	...	...	...	...	...	...	...
			Retail.	...	...	...	...	...	...	...	...	...	...	...	...	27	14	28	7	25	0	23	5	23	9	18	0	110	0	110	0	110	0	8	3	8	4	4	8

MYSORE CHIEF COMMISSIONER'S OFFICE,
BANGALORE, 29*th July* 1880.

By Order,
C. RANGACHARLU,
Revenue Secretary.

Mysore Government Press, Bangalore.—1880.

SUPPLEMENT TO THE

MYSORE GAZETTE.

No. 31 Published by Authority. of 1880.

BANGALORE, SATURDAY, AUGUST 7, 1880.

589

OFFICIAL PAPERS.

Abstract of Season or Intermediate Reports for the Week ending 31*st July* 1880.

Bangalore District.—One inch, 63 cents of rain at Bangalore. Crops in good condition. Prospects favorable. Public health generally good. Price of rice fallen; that of ragi stationary.

Kolar District.—Ninety-nine cents of rain at Kolar. Dry crops in good condition in some parts, and withering where the rain-fall has been deficient. Most of the tanks are still empty. Prospects somewhat hopeful. Fever and murrain still prevalent. Prices slightly fallen.

Túmkúr District.—Fifty-one cents of rain at Túmkúr. Standing young crops in good condition, except in some parts of the District where they are withering for want of rain particularly in the Sira and Maddagiri Taluks. Prospects of season fair. Health good.

Mysore District.—Twenty-seven and half cents of rain at Mysore. Standing crops in good condition. Prospects of season and public health good. Prices stationary.

Hassan District.—Seventy-four cents of rain at Hassan. Crops in good condition, except in the Taluks of Channaraypatna, Nagamangala and Haranhalli, where they are withering from want of rain. Paddy is being transplanted in some taluks. Prospects favorable. Public health satisfactory. Cattle disease prevalent in all taluks except Belur. Prices stationary.

Shimoga District.—Eighty-two cents of rain at Shimoga. Standing crops in good condition. Sowing of dry crops still continues. The arecanut crop suffers from rot. Prospects of season and public health good, but fever and bowel complaints are prevalent. Cattle still suffer from murrain. Prices stationary.

Kadur District.—Twenty-three cents of rain at Chikmagalur. Crops in good condition. Prospects of season and public health good, but fever prevalent in parts of the Banavar and Tarikere Taluks. Cattle disease prevalent in some parts of the Tarikere and Chikmagalur Taluks. Prices stationary.

Chitaldroog District.—Ninety-five cents of rain at Chitaldroog. Crops in good condition. Sowing is still continued. Prospects good. Fever prevailed in some parts of the District. Cattle suffer from murrain in the Dodéri Taluk. Prices stationary.

Coorg.—Rain-fall 9 inches, 33 cents. Transplanting rice continues. Ragi thriving. Coffee prospects poor. Health good.

By Order,

C. RANGACHARLU,
Revenue Secretary.

PROVINCE OF MYSORE.

Rain-fall and Season Report for the month of April 1880.

No.	Districts.	Total Rain-fall in all the Talúks of the District.				Particulars of supply of water by rain to tanks.				Kandayam Lands newly taken up for cultivation and for which Razinamas have been tendered.										Seeds sown in April 1880.	State of Crops in April 1880.	Crops harvested in April 1880.
						No. of tanks supplied with water.		No. of tanks not supplied with water.		Kandayam of lands newly taken up for cultivation.					Kandayam of lands for which Razinamas have been tendered.							
		In April 1879.		In April 1880.		In April 1879.	In April 1880.	In April 1879.	In April 1880.	In April 1879.			In April 1880.				In April 1879.			In April 1880.				
		I.	C.	I.	C.	No.	No.	No.	No.	Rs.	A.	P.	Rs.	A.	P.	Rs.	A.	P.	Rs.	A.	P.			
1	Bangalore...	1	9	9	56	...	13	1,750	1,737	2,131	2	3	1,497	6	9	17,305	2	10	37,219	11	11	Sugar-cane.	Good.	Vaisak crop.
2	Kolar ..	0	0	5	15	...	...	3,367	3,367	691	10	0	372	10	2	46,861	3	0	49,799	5	3	Nil.	Vaisak paddy and sugar-cane in pretty good condition.	Vaisak paddy and ground-nuts.
3	Túmkúr ..	1	66	8	61	...	...	1,340	1,340	2,104	8	8	3,962	10	8	56,788	6	3	50,092	8	0	Paddy in Chiknayakanhalli, sugar-cane in Sira.	Fair.	Vaisak paddy.
4	Mysore ...	18	6	33	1½	...	39	1,228	1,189	113	8	10	337	0	0	6,584	5	10	8,235	7	8	Javari, sesamum, castor-oil seeds and ragi.	Good	Cotton in Talkad, sugar-cane in Mandya.
5	Hassan ...	6	41	20	61	...	2,610	2,931	321	466	6	6	2,628	4	4	19,141	6	7	7,680	10	10	Gid ragi, paddy and javari sugar-cane and oil-seeds.	Ditto.	Vaisak paddy in Hassan & Belur.
6	Shimoga ...	4	99¾	15	41	...	...	4,868	4,865	1,224	12	0	5,681	4	0	14,245	8	0	14,833	11	10	Paddy in Sorab, Nagar and Kauledurga.	Sugar-cane, black and green-gram and Vaisak paddy good.	Vaisak paddy in Nagar.
7	Kadur ...	3	76	16	18½	...	...	3,080	3,080	252	4	7	1,020	12	3	6,437	15	2	4,170	8	0	Paddy in Chikmagalur and Múdgere, gid ragi in Chikmagalur.	Sugar-cane, coffee and paddy good.	Nil
8	Chitaldroog	2	25	10	80	...	2	999	997	1,420	12	0	2,936	10	0	31,154	10	0	20,900	14	10	Sugar-cane in Davangere.	Paddy and sugar-cane good.	Wheat, Bengal-gram, cotton and paddy.
	Total.....	38	22¾	119	34	1,319	2,664	19,563	16,896	8,405	[illegible]	10	18,436	10	2	1,98,518	9	8	1,92,982	14	4			

Dated 2nd August 1880.

By Order,

T. SRINIVASAIENGAR,

For Revenue Secretary

Mysore Government Press, Bangalore—1880.

SUPPLEMENT TO THE

MYSORE GAZETTE.

No. 32 Published by Authority. of 1880.

BANGALORE, SATURDAY, AUGUST 14, 1880.

OFFICIAL PAPERS.

Abstract of Season or Intermediate Reports for the Week ending 7th August 1880.

Bangalore District.—Two cents of rain at Bangalore. Crops in good condition. Prospects fair. Public health generally good, but fever and ague prevalent in parts. Prices risen.

Kolar District.—Twelve cents of rain at Kolar. Standing crops withering in many parts from want of rain. Most of the tanks are empty. Prospects uncertain. Fever and murrain continue. Price of rice slightly risen.

Túmkúr District.—Fifty-one cents of rain at Túmkúr. The young crops are withering in many places from want of rain. Prospects not improved. Health good.

Mysore District.—Fifty-four cents of rain at Mysore. The cholam crop is ready for the sickle, and sesamum is being reaped. Prospects of season and public health good. Prices fluctuating.

Hassan District.—Thirty-three cents of rain at Hassan. Crops in the Channaraypatna, Nagamangala and Haranhalli Taluks are withering from the want of rain. Paddy is being transplanted in the Manjarabad Taluk, where continuous rain-fall has injured the coffee trees. Prospects of season and public health good, but fever prevalent in parts of the District. Cattle disease on the increase in some taluks and abating in others. The Taluks of Arkalgúd and Belur were free from the disease. Prices stationary.

Shimoga District.—Eighty cents of rain at the District Head-quarters. Crops generally in good condition, but in the Maidan portions of the Honnali Taluk they are fading, and sowing operations therein are retarded from want of rain. Arecanut gardens suffer from "kole-roga" or rot. Prospects good. Fever and dysentery prevalent in parts. Cattle disease prevalent in 4 taluks. The want of fodder is felt in the Honnali Taluk. Prices stationary.

Kadur District.—Fifty-four cents of rain at Chikmagalur. Crops in good condition. Prospects of season and public health generally good, but fever still prevalent in parts. Prices stationary.

Chitaldroog District.—Sixteen cents of rain at District Head-quarters. Crops healthy, except in parts of the Dodéri and Hiriyur Taluks, where they are in want of rain. Prospects of season fair. Health good; severe fever prevalent in the town of Hiriyur. Murrain prevalent in the Dodéri and Hiriyur Taluks. Prices stationary.

Coorg.—Rain-fall 9 inches, 4 cents at Mercara. Transplanting rice continued. Ragi damaged by continued rain. Coffee prospects poor. Health good.

By Order,

C. RANGACHARLU,
Revenue Secretary.

Mysore Government Press, Bangalore.—1880.

SUPPLEMENT TO THE

MYSORE GAZETTE.

No. 33 Published by Authority. of 1880.

BANGALORE, SATURDAY, AUGUST 21, 1880.

OFFICIAL PAPERS.

Abstract of Season or Intermediate Reports for the Week ending 14th August 1880.

Bangalore District.—Four inches 1 cent of rain at Bangalore. Crops in good condition. Prospects favorable. Public health good. Prices slightly fallen.

Kolar District.—Three inches, 38 cents rain at Kolar. The rain-fall has done much good to the standing dry crops which are in good condition. Kartik paddy cultivation is being carried on. Some of the tanks have received a small supply of water. Prospects of season hopeful. Public health generally good. Cattle disease abating. Prices fallen.

Túmkúr District.—One inch 68 cents of rain at Túmkúr. Rain fell in all Taluks except in Honnavalli and the crops are generally doing well. In the Honnavalli Taluk however the standing crops are withering, and in some places no seeds have yet been sown. Prospects favorable. Public health good.

Mysore District.—Two inches 39 cents of rain at Mysore. Crops in good condition. Cholam being harvested. Prospects of season very good. Public health good. Prices stationary.

Hassan District.—One inch 49 cents of rain at Hassan. The recent showers have enabled ryots in Channaraypatna, Nagamangala and Haranhalli Taluks, to sow ragi. Transplanting of paddy is still continued in the Manjarabad Taluk. Prospects favorable. Public health good except in the Haranhalli and Hassan Taluks where fever and ague still prevail. Cattle disease abating. Prices stationary.

Shimoga District.—Forty-five cents of rain fell at Shimoga. Standing crops in fair condition generally; but the paddy crop in the Shimoga and Shikarpur Taluks need more rain. Arecanut suffers from rot in some taluks. Prospects fair. Fever and bowel-complaints prevalent. Murrain still continues. Prices stationary.

Kadur District.—Nine cents of rain at District head-quarters. Crops in good condition. Prospects of season and public health good. Cattle disease prevalent in parts of the Chikmagalur Taluk. Prices stationary.

Chitaldroog District.—Fifty-five cents of rain at Chitaldroog. Crops in a healthy condition, but more rain required. Prospects fair. Public health good. Cattle disease prevalent in parts of the Chitaldroog and Dodéri Taluks. Prices of ragi risen.

Coorg.—Rain-fall at Mercara 2 inches 8 cents. Transplanting of rice progressing. Too much rain for ragi crop. Coffee prospects poor. Health generally good.

By Order,

C. RANGACHARLU,
Revenue Secretary.

Prices Current of Food Grains in the Provinces of Mysore and Coorg during the Fortnight ending 31st July 1880.

QUANTITY PER RUPEE BY THE STANDARD SEERS OF 80 TOLAS, *vide* GOVERNMENT OF INDIA NO. 1—21, DATED 10TH FEBRUARY 1874.

No.	Districts.	Shops	Wheat. Present Fortnight.			Wheat. Past Fortnight.			Wheat. Corresponding Fortnight in 1879.			Barley. Present Fortnight.			Barley. Past Fortnight.			Barley. Corresponding Fortnight in 1879.		
			seers.	chittaks		s.	c.		s.	c.		s.	c.		s.	c.		s.	c.	
1	Bangalore.	Wholesale.	9	...		8	13		6	9		9	8		9	9		8	5	
		Retail.	8	7		8	5		6	5		9	0		9	1		8	1	
2	Kolar. ...	Wholesale.	...	...		...	...		...	...		7	10		7	10		6	12	
		Retail.	...	...		...	...		...	...		7	6		7	6		6	8	
3	Túmkúr ...	Wholesale.	6	8		6	8		7	4		9	0		9	0		6	8	
		Retail.	6	0		6	0		6	12		8	8		8	8		6	0	
4	Mysore ...	Wholesale.	7	4		7	4		4	4		...	...		...	...		...	...	
		Retail.	7	0		7	0		4	0		...	...		...	...		...	...	
5	Hassan ...	Wholesale.	...	...		...	...		...	...		...	...		...	...		...	...	
		Retail.	9	0		9	0		5	8		9	0		9	0		6	10	
6	Shimoga ...	Wholesale.	...	...		...	...		...	...		...	...		...	...		...	...	
		Retail.	6	13		6	13		4	7		8	6		8	6		5	4	
7	Kadur ...	Wholesale.	...	...		...	...		...	...		...	...		...	...		...	...	
		Retail.	10	0		10	0		5	0		...	...		...	...		...	...	
8	Chitaldroog.	Wholesale.	10	0		9	0		5	8		11	0		10	0		6	4	
		Retail.	9	0		9	0		5	0		10	0		10	0		6	0	
	Average ...	Wholesale.	8	3		7	14		5	14		9	4		9	1		6	15	
		Retail.	8	1		8	0		5	5		8	11		8	11		6	6	
	Coorg ...	Wholesale.	...	...		...	...		...	...		...	...		...	...		...	...	
		Retail.	6	0		6	0		5	3		6	11		6	9		5	5	

No.	Districts.	Shops	Rice, best sort. Present Fortnight.			Rice, best sort. Past Fortnight.			Rice, best sort. Corresponding Fortnight in 1879.			Rice, common. Present Fortnight.			Rice, common. Past Fortnight.			Rice, common. Corresponding Fortnight in 1879.		
			s.	c.		s.	c.		s.	c.		s.	c.		s.	c.		s.	c.	
1	Bangalore.	Wholesale.	11	2		10	11		10	0		12	7		12	1		11	8	
		Retail.	10	9		10	4		9	12		11	14		11	9		11	4	
2	Kolar. ...	Wholesale.	12	1		11	13		11	4		14	6		14	15		12	12	
		Retail.	11	13		11	9		11	0		14	2		14	10		12	8	
3	Túmkúr ...	Wholesale.	12	8		12	8		12	0		13	8		13	8		12	8	
		Retail.	12	0		12	0		11	8		13	0		13	0		12	0	
4	Mysore ...	Wholesale.	11	4		11	8		10	12		11	8		12	6		11	4	
		Retail.	11	0		11	5		10	8		11	4		12	2		11	0	
5	Hassan ...	Wholesale.	...	...		...	...		...	...		...	...		...	...		...	...	
		Retail.	13	0		13	0		10	8		14	0		14	0		11	2	
6	Shimoga ...	Wholesale.	...	...		...	...		...	...		...	...		...	...		...	...	
		Retail.	12	10		12	10		8	6		14	11		14	11		12	10	
7	Kadur ...	Wholesale.	...	...		...	...		...	...		...	...		...	...		...	...	
		Retail.	12	0		12	0		12	0		15	0		15	0		14	0	
8	Chitaldroog.	Wholesale.	12	0		12	0		11	0		13	0		14	0		13	0	
		Retail.	11	0		11	0		10	0		12	0		13	0		12	0	
	Average ...	Wholesale.	11	13		11	11		11	0		12	15		13	6		12	3	
		Retail.	11	12		11	11		10	7		13	4		13	8		12	1	
	Coorg ...	Wholesale.	...	...		...	...		...	...		...	...		...	...		...	...	
		Retail.	10	4		10	6		9	0		15	8		14	13		13	7	

No.	Districts.	Shops	Great Millet, (Jola, Javar) *Holcus Sorghum.* Present Fortnight.			Great Millet. Past Fortnight.			Great Millet. Corresponding Fortnight in 1879.			Bulrush Millet, (Kambu, Bajra) *Penicillaria Spicata.* Present Fortnight.			Bulrush Millet. Past Fortnight.			Bulrush Millet. Corresponding Fortnight in 1879.		
			s.	c.		s.	c.		s.	c.		s.	c.		s.	c.		s.	c.	
1	Bangalore.	Wholesale.	25	0		22	5		18	8		...	...		...	...		...	...	
		Retail.	24	0		21	5		17	14		...	...		...	...		...	...	
2	Kolar. ...	Wholesale.	...	...		...	...		...	...		32	10		32	10		30	12	
		Retail.	...	...		...	...		...	...		32	6		32	6		30	8	
3	Túmkúr ...	Wholesale.	...	...		...	...		...	...		...	...		...	...		...	...	
		Retail.	...	...		...	...		...	...		...	...		...	...		...	...	
4	Mysore ...	Wholesale.	32	8		...	...		25	8		...	...		...	...		...	...	
		Retail.	32	4		...	...		25	0		...	...		...	...		...	...	
5	Hassan ...	Wholesale.	...	...		...	...		...	...		...	...		...	...		...	...	
		Retail.	...	...		...	...		...	...		...	...		...	...		...	...	
6	Shimoga ...	Wholesale.	...	...		...	...		...	...		...	...		...	...		...	...	
		Retail.	25	5		25	3		18	15		...	...		...	...		...	...	
7	Kadur ...	Wholesale.	...	...		...	...		...	...		...	...		...	...		...	...	
		Retail.	...	...		...	...		...	...		...	...		...	...		...	...	
8	Chitaldroog.	Wholesale.	33	0		33	0		17	0		33	0		33	0		25	0	
		Retail.	32	0		32	0		16	7		32	0		32	0		24	6	
	Average ...	Wholesale.	30	3		27	10		20	5		32	13		32	13		27	14	
		Retail.	28	6		26	3		19	9		32	3		32	3		27	7	
	Coorg ...	Wholesale.	...	...		...	...		...	...		...	...		...	...		...	...	
		Retail.	...	...		...	...		...	...		...	...		...	...		...	...	

No.	Districts.	Shops	Lesser Millets, Ragi, &c., (Kavaru, Varagu, Save, China, Koralu, Marwa, Nagli, &c.) *Panicum Miliaceum, Eleusine, Coracana, &c.* Present Fortnight.			Lesser Millets. Past Fortnight.			Lesser Millets. Corresponding Fortnight in 1879.			Gram. Present Fortnight.			Gram. Past Fortnight.			Gram. Corresponding Fortnight in 1879.		
			s.	c.		s.	c.		s.	c.		s.	c.		s.	c.		s.	c.	
1	Bangalore.	Wholesale.	28	2		28	8		23	6		29	12		29	4		18	9	
		Retail.	27	2		27	8		22	11		28	11		28	3		18	2	
2	Kolar. ...	Wholesale.	29	2		29	2		26	0		34	8		34	8		20	12	
		Retail.	28	14		28	14		25	12		34	3		34	3		20	7	
3	Túmkúr ...	Wholesale.	...	...		...	...		...	...		34	0		34	0		21	0	
		Retail.	...	...		...	...		...	...		33	0		33	0		20	0	
4	Mysore ...	Wholesale.	30	12		31	0		26	8		32	4		30	4		21	8	
		Retail.	30	8		30	12		26	0		32	0		30	0		21	0	
5	Hassan ...	Wholesale.	...	...		...	...		...	...		...	...		...	...		...	...	
		Retail.	30	0		30	0		22	5		30	0		30	0		22	0	
6	Shimoga ...	Wholesale.	...	...		...	...		...	...		22	1		22	1		16	12	
		Retail.	33	1		33	1		30	15		22	1		22	1		16	12	
7	Kadur ...	Wholesale.	...	...		...	...		...	...		...	...		...	...		...	...	
		Retail.	25	0		25	0		24	0		23	0		23	0		18	0	
8	Chitaldroog.	Wholesale.	38	8		36	0		28	0		29	0		29	0		17	0	
		Retail.	38	0		35	0		27	5		28	0		28	0		16	7	
	Average ...	Wholesale.	32	2		31	12		23	15		31	14		31	6		19	12	
		Retail.	30	11		30	6		24	4		28	14		28	9		19	1	
	Coorg ...	Wholesale.	...	...		...	...		...	...		...	...		...	...		...	...	
		Retail.	31	3		27	14		26	5		24	12		23	5		19	11	

No.	Districts.	Shops	Firewood. Present Fortnight.			Firewood. Past Fortnight.			Firewood. Corresponding Fortnight in 1879.			Salt. Present Fortnight.			Salt. Past Fortnight.			Salt. Corresponding Fortnight in 1879.		
			s.	c.		s.	c.		s.	c.		s.	c.		s.	c.		s.	c.	
1	Bangalore.	Wholesale.	...	...		...	...		...	...		10	12		10	12		11	8	
		Retail.	84	0		84	0		78	0		10	0		10	0		11	0	
2	Kolar. ...	Wholesale.	...	...		...	...		...	...		11	5		11	5		11	9	
		Retail.	172	6		172	6		172	4		11	1		11	1		11	5	
3	Túmkúr ...	Wholesale.	360	0		360	0		140	0		9	8		9	8		9	0	
		Retail.	340	0		340	0		130	0		9	0		9	0		8	0	
4	Mysore ...	Wholesale.	81	0		81	0		81	0		7	4		7	4		8	8	
		Retail.	78	0		78	0		78	0		7	0		7	0		8	5	
5	Hassan ...	Wholesale.	...	...		...	...		...	...		...	...		...	...		...	...	
		Retail.	800	0		800	0		125	0		7	0		7	0		7	8	
6	Shimoga ...	Wholesale.	...	...		...	...		...	...		...	...		...	...		...	...	
		Retail.	480	0		480	0		480	0		8	6		8	6		7	5	
7	Kadur ...	Wholesale.	...	...		...	...		...	...		...	...		...	...		...	...	
		Retail.	60	0		60	0		60	0		9	0		9	0		9	0	
8	Chitaldroog.	Wholesale.	100	0		100	0		100	0		10	0		9	0		8	8	
		Retail.	100	0		100	0		100	0		9	0		9	0		8	0	
	Average ...	Wholesale.	180	5		180	5		107	0		9	12		9	9		9	13	
		Retail.	264	5		264	5		152	14		8	13		8	13		8	13	
	Coorg ...	Wholesale.	...	...		...	...		...	...		...	...		...	...		...	...	
		Retail.	110	0		110	0		110	0		8	5		8	3		8	2	

MYSORE CHIEF COMMISSIONER'S OFFICE,
BANGALORE, 13*th August* 1880.

By Order,
C. RANGACHARLU,
Revenue Secretary.

Mysore Government Press, Bangalore.—1880.

SUPPLEMENT TO THE

MYSORE GAZETTE.

No. 34 Published by Authority. of 1880

BANGALORE, SATURDAY, AUGUST 28, 1880.

OFFICIAL PAPERS.

Abstract of Season or Intermediate Reports for the Week ending 21*st August* 1880.

Bangalore District.—Six inches 91 cents of rain at Bangalore. Crops in good condition. Prospects favorable. Public health good. Price of rice slightly risen.

Kolar District.—Nine cents of rain at Kolar. Standing dry crops in good condition. More rain needed. Prospects hopeful. Public health good. Cattle disease abating. Prices slightly risen.

Túmkúr District.—Eight cents of rain at Túmkúr, 3½ inches at Kunigal and none in other taluks. In the Sira and Maddagiri Taluks the young crops are in a very backward condition. Sowing in these taluks has not yet been completed. Prospects of season indifferent. Public health good.

Mysore District.—Harvesting of jolam continues. Prospects very good. Public health good. Prices stationary.

Hassan District.—Two inches 26 cents of rain at Hassan. Heavy rain fell in the Nagamangala Taluk which injured 2 large tanks and swept away 2 bridges on the Bangalore road. Crops in good condition. Jola is being reaped in the Nagamangala Taluk and green-gram in Narsipur. Prospects hopeful. Public health good except in parts of Hassan and Haranhalli Taluks. Cattle disease is more or less prevalent in the District.

Shimoga District.—Twelve cents of rain at Shimoga. In the Malnad Taluks crops are in good condition; in the Maidan they are withering from want of rain, and field work is in a backward state. Rot continues to prevail in arecanut gardens. Prospects not very good. Fever and bowel-complaints prevalent. Cattle still suffer from murrain. Price of rice risen.

Kadur District.—One inch 1 cent of rain at Chikmagalur. Crops in good condition. Prospects of season generally good, but want of rain is felt in the Maidan taluks. Public health generally good. Cattle disease prevalent in parts of the Chikmagalur and Tarikere Taluks. Price of rice fallen.

Chitaldroog District.—Twenty-four cents of rain at Chitaldroog. Light showers fell in all the taluks. More rain wanted. Crops in good condition. Prospects fair. Fever prevailed in parts of the District; as also murrain among cattle. Price of ragi fallen.

Coorg.—Rain-fall 1 inch 42 cents. Rice and ragi look well. Coffee prospects poor. Health fair.

By Order,

C. RANGACHARLU,
Revenue Secretary.

PROVINCE OF MYSORE.

Rain-fall and Season Report for the month of May 1880.

Districts.	Total Rain-fall in all the Taluks of the District.				Particulars of supply of water by rain to tanks.				Kandayam Lands newly taken up for cultivation and for which Razinamas have been tendered.													Seeds sown in May 1880.	State of Crops in May 1880.	Crops harvested in May 1880.
					No. of tanks supplied with water.		No. of tanks not supplied with water.		Kandayam of lands newly taken up for cultivation.						Kandayam of lands for which Razinamas have been tendered.									
	In May 1879.		In May 1880.		In May 1879.	In May 1880.	In May 1879.	In May 1880.	In May 1879.			In May 1880.			In May 1879.			In May 1880.					
	I.	C.	I.	C.	No.	No.	No.	No.	Rs.	A.	P.	Rs.	A.	P.	Rs.	A.	P.	Rs.	A.	P.				
ngalore...	34	39	47	74	462	895	1,288	855	505	9	6	1,535	9	3	1,024	11	7	193	1	9	Punaji paddy, sesamum and harka.	Good.	Vaisak paddy.
lar ...	62	72	57	18½	1,960	800	1,407	2,557	537	9	10	403	14	5	0	0	0	0	0	0	Sesamum, harka, sajjé, ground-nuts and oil-seeds.	Good in some places and indifferent in others owing to want of water.	Nil.
nkúr ..	32	85½	30	53	578	673	762	667	3,531	14	9	3,552	10	11	763	6	0	1,238	11	0	Black and green-gram, javari and sesamum.	Nil.	Vaisak, paddy in Túmkúr, Koratagere, Maddagiri and Kadaba.
sore ...	43	91¾	87	2	784	1,104	444	124	237	15	3	249	1	1	0	0	0	0	0	0	Ragi, sesamum, paddy, tuvar, harka, javari, black and green-gram.	Good.	Cotton in Talkad.
san ...	63	72	50	2½	2,931	2,610	...	321	835	11	6	2,092	3	6	0	0	0	0	0	0	Gid ragi, tuvar, paddy, javari, oil-seeds, green and black gram.	Paddy, ragi, coffee and sugar-cane good.	Vaisak paddy in Manjarabad, sugar-cane in Attikuppa.
moga ...	93	86	21	59½	4,076	260	815	4,605	3,191	6	0	4,685	4	0	3,039	4	0	3,444	14	0	Paddy.	Paddy, sugar-cane good.	Nil.
lur ...	65	25	27	49	1,538	516	1,542	2,564	881	10	4	1,666	13	3	8,653	15	0	3,194	7	3	Paddy, ragi, green and black-gram, gingelly and javari.	Sugar-cane, paddy, coffee and javari good.	Nil.
taldroog	62	72	24	96	746	362	253	637	2,638	4	0	1,790	4	0	1,396	2	0	3,313	13	6	Javari in Hiriyur, green gram in Budihal.	Sugar-cane, paddy, navane and javari good.	Paddy and javari in Dodéri, Budihal and Pavagada.
tal.....	459	43½	346	74½	13,075	7,220	6,511	12,340	12,360	1	2	15,975	12	5	14,877	6	7	11,384	15	6				

Dated 21st August 1880.

By Order,
T. SRINIVASAIENGAR,
For Revenue Secretary.

Mysore Government Press, Bangalore—1880.

SUPPLEMENT TO THE

MYSORE GAZETTE.

No. 35 Published by Authority. of 1880.

BANGALORE, SATURDAY, SEPTEMBER 4, 1880.

COFFEE LEAF DISEASE.

PRELIMINARY REPORT BY THE GOVERNMENT CRYPTOGAMIST.

The DIRECTOR, Royal Botanic Gardens, To the Hon. the COLONIAL SECRETARY.

No. 30. Royal Botanic Garden,
Peradeniya, 15th June 1880

SIR,—I HAVE the honor to forward a Preliminary Report on the coffee-leaf disease by Mr. H. Marshall Ward, the Cryptogamist attached to this establishment.

In this report he gives an outline of some of the results attained during the fou months which have elapsed since his arrival in the Colony.

I have carefully read the document, and have also naturally been conversant with a considerable part of Mr. Ward's researches, and it is with much satisfaction that I have noted the solid method of his procedure, and the sure basis he has laid for further progress. I would especially call attention to the *character* of his work, which is that of pure investigation followed out with a single eye to the elucidation of the difficult problem placed before him.

An important point to be attended to is the isolation of *Hemileia* from several other fungi growing upon coffee, as until this is accurately and fully effected it is of course impossible to follow out the whole course and duration of its life, its modes of nutrition and propagation, and the circumstances favorable or otherwise to its growth. The work necessary for this is mainly microscopical, and during its prosecution some important new facts of structure have, it will be seen, been elucidated, and thus definite progress has been made. There is, of course, yet much to be learnt before the complete life and character of *Hemileia* is ascertained, but enough is now known to shew that, apart from its disastrous effects, it is a plant of remarkable botanical interest.

The bearing of these new observations upon the practical question of meeting the ravages of leaf-disease is very close. It would however be to play the part of an empiric rather than of a wise physician to prescribe a remedy before a complete diagnosis is made out. No speculations are, I am glad to notice, advanced in this report, and I know that nothing is stated in it which has not been subjected to severe and repeated tests, and which may not therefore be regarded as fairly established. The acquirement of knowledge step by step is the only satisfactory progress in enquiries of this description, and I would ear-

nestly ask those who are so materially interested in the pest, to be patient in their criticism of this first instalment of what is and must be a scientific investigation, to be followed out in the scientific method, and, avoiding hasty conclusions on incomplete data to continue to afford their valuable assistance in the enquiry.

All that has as yet come under my observation in connection with Mr. Ward's work has further aided to convince me that he is fully justified in regarding the disease, so far as it is connected with *Hemileia*, as without doubt wholly the result of an extraneous parasitic organism, which though it penetrates into the spaces between the leaf-cells of the coffee must yet be regarded as essentially distinct, separable from and external to its tissues.

I am, &c.,

HENRY TRIMEN.
Director.

The CRYPTOGAMIST, To the Hon. the COLONIAL SECRETARY.

Preliminary Report on the enquiry into Coffee Leaf-disease.

Peradeniya, June 12th, 1880.

SIR,—I HAVE the honor to report that, in accordance with the terms of my engagement, I have been occupied since arriving in Ceylon in February last with observations and experiments upon "coffee leaf-disease."

It is proposed to confine this preliminary report to a statement of observed facts, especially as several of these are new; nevertheless much has been accomplished on the estates, in the way of comparing what is already known, and in acquiring further information as to the nature of leaf-disease, its distribution and treatment. The true interests of the planters will be, however, best served by a future and more extended report on these matters.

Having made myself acquainted with the literature already published, and obtained as much information as possible on the subject, I at once proceeded to further practical acquaintance with "leaf-disease," and commenced a microscopical analysis of the coffee plant in health and disease; this has been continued hitherto in various parts of the coffee districts. Specimens have been obtained from all elevations, and from the most various situations, soils and climates that the districts afford.

I also placed myself in communication with representative planters for the purpose of obtaining further information, and made some preliminary experiments with reference to suggestions obtained, in order to test the value of various observations as to the nature of "leaf-disease."

On March 15th, a tour through the chief districts in the southern and eastern parts of the Central Province was commenced. I made observations on various estates in Hantane, Nilambe, Hewahetta, Pussellawe, Ramboda, Maturata, Uda Pusselawa, Ambagamuwa, Dikoya, Dimbulla, Badulla, Madulsima, Hewa-eliya and Haputale.

Two objects were kept in view during these journeys: (1) to gather as much information as possible concerning coffee, its cultivation, its appearance in health and disease, and the experience of planters as to remedial measures; (2) to investigate the pathology of "leaf-disease," and the life-history of *Hemileia vastatrix* under the various conditions afforded by differences of soil, altitude, climate, &c.

598

During the whole time were kept up as continuously as possible the researches commenced at Peradeniya, and no opportunity was lost in verifying or correcting observations. I carried microscopic and drawing apparatus everywhere, and, as always, carefully figured any objects of importance to the enquiry. A large series of drawings and notes was thus accumulated for future guidance as new lines of research are opened up.

On my return, experiments were at once commenced to determine certain points suggested by the experience gained. These are still proceeding and yielding results. Meanwhile it is my duty to bring some examples forward, as illustrating and warranting the conclusions so far arrived at.

(1)—Several beds of Jamaica coffee seedlings in the Peradeniya gardens appeared quite healthy on February 10th, 1880; each seedling was about eight inches high, and bore six or eight pairs of leaves. Specimens were selected, and microscopically examined: nothing shewed that the internal structure was abnormal, or that they were functionally wanting in any way.

Twenty-four of these seedlings were potted off in baked earth, and removed for future experiments. To windward of the beds, and separated from them by an ordinary gravel path, were several old coffee-trees, eight to ten feet high and badly diseased. The open verandah in which the selected plants had been placed also lay to the leeward of a quantity of old and diseased trees, separated by many yards of garden.

During each day following, the leaves of specimens from both beds and pots were examined: on the lowermost leaves were found a few scattered and ill-defined spores and tubes evidently of fungoid nature, as well as delicate threads of spiders' web, particles of sand, &c. The uppermost leaves shewed no such growths.

On February 20th, the first yellow path was observed on the lower side of a lowermost leaf of one of the exposed plants: during successive days several more patches appeared, always on the older or lower leaves, and in a month all the beds contained badly diseased specimens. By this time, also, the selected specimens had become diseased—chiefly on the "seed leaves" (cotyledons.)

The most careful examination failed to shew the disease spots on any other part of the seedling than these older leaves; and even in the leaf stalk no fungus or other abnormal structure was observable, and to all appearance the root and stem were in perfect health.

(2)—Specimens of disease patches in all stages were selected from the above plants. Some were very small, hardly yellow "pin-spots," only seen when held up to the light: others older, larger, and more oily-looking: still older ones were covered below with the yellow or orange "rust": while yet further advanced, irregular patches presented brown or black blotches in the central part, the yellow powder being at the edges.

The microscope establishes the following facts, and I have confirmed the observations since by examination of specimens from all parts of the coffee districts, at various elevations and seasons.

Thin slices of the "pin-spots" and pale yellow patches, taken in all directions, and examined fresh or treated with chemical reagents, shew that this part of the leaf has the passages between its cells which lead to the exterior blocked up with a much-branched, tubular, coral-like mycelium: the short stumpy branches applying themselves here and there in their course to the outside walls of the cells. The contents of the tubes are very granular and oily, usually colored by a pigment varying from yellow to deep orange-red.

The older patches present similar features exaggerated, but the branched tubes of the mycelium have sent peculiar groups of processes outwards through the outlets (stomata) of the epidermis: on reaching the exterior, the ends of these branches form swellings which soon become filled with deep orange-colored pigment and granules, and the groups of bodies seen from above present the appearance of rosettes. Since these bodies are easily rubbed off, they form a powdery mass on the outside the so-called "rust."

Similar examination of the brown or black central blotches shews that the leaf cells have lost most of their contents, turned brown and collapsed: thus the upper and lower surfaces come closer together, and such parts are thinner than the rest of the leaf. Usually, a number of black dots are seen on the upper and lower surfaces.

There can be no doubt that the tubular, branched mycelium has been feeding upon the contents of the leaf cells, turning the green coloring matter and other substances into the granular and oily masses found within it and finally passing forth into the bodies forming the "rust"-powder; and when we reflect upon the immense quantities of matter thus derived and thrown off from the leaves, we may understand in some measure the terrible effect produced upon the coffee plant.

(3)—Some of the yellow "rust" was placed in water on a glass slide and examined under the microscope. Each "grain" of the powder is a hollow case, somewhat kidney-shaped in longitudinal section, and triangular, with one angle downwards, in transverse section: it is narrower at the end attached to the mycelium. The upper curved side is studded with papillæ or wart-like projections of its outer colorless coat: the two smooth sides converge below to a rounded longitudinal ridge. Such a figure exhibits various forms if projected in different positions. As said, this papillate body has granular, orange-colored contents.

Many of them soon swell in water, and become filled with globules of clear fluid (vacuoles) from the equal and rapid imbibition of water: the papillate body now appears as if filled with spherical clearer bodies embedded in the colored mass. These globules are not always equal in size, but generally are nearly so, and average $\frac{1}{10}$ to $\frac{1}{8}$ the diameter of the whole mass: not only by their appearance, refusal to absorb staining reagents, and general behaviour, but by the fact that they can be made to disappear and reappear am I convinced of their fluid nature.

Others of the papillate bodies, however, do not fill with globules; but swell, and soon lose their reddish color, and the contents become very granular and grey looking. After a time, varying from a few hours to a much longer period, the granules, which are very minute and numerous, pass into a state of violent motion to and fro in the fluid contents of the papillate body. This motion is too active to be merely physical, and has been observed too often to be accidental. After remaining in this state for some hours, the granules pass out into the surrounding water, and become widely distributed, leaving the empty papillate case behind: their ultimate fate is not yet satisfactorily established.

A piece of leaf, with "rust" on it, was exposed to sunlight, and was found to become paler. Examination shewed that the majority of the papillate bodies had lost their contents, and remained as empty colorless cases: the further history of the contents has not been yet ascertained.

On February 22nd, during an observation on the moist papillate bodies, several of them were found to have emitted tubular processes from one to four points of the circumference: these tubes are continuations of the inner coat, and the colored contents pass into them. Further observations have shewn that one tube usually grows to a great

length, its cavity is continuous, and no partitions form across it, it takes a curved and even coiled course, and sends out many short branches at frequent intervals: the diameter of the tube is about $\frac{1}{5}$ the breadth of the papillate body. A streaming of the contents is often seen, and the colored matter passes gradually into the ends of the branches. From the above facts it is inferred that the papillate bodies are *spores*, which in certain circumstances germinate and produce a tubular mycelium: further facts are mentioned hereafter.

The minute black dots on the dark parts of old patches are found to contain multitudes of very small hyaline spores, budded off from the ends of delicate filaments which are matted together into a hollow case beneath the epidermis: the cavity becomes filled with the spores. These facts are here mentioned because the black points are so universal—they are not yet known to have anything in common with the above phenomena beyond what has been now stated.

(4)—On March 22nd, the peculiar appearance presented by certain patches of "rust" obtained from "Inverness" estate, was shewn to be due to a different kind of body from the papillate spores. The "rust" spots appeared pink, rather than orange-colored, and were of a pasty rather than powdery character. Among the clusters of papillate spores, the microscope shewed certain bodies of little more than half the size, quite smooth, crowded with red granular matter, and of a shape somewhat like a turnip or peg-top: each was on a narrow stalk, and many had a central boss on the top. These are not to be confounded with immature papillate spores.

Associated with the same external features, I have since rediscovered these bodies at various places and times *e. g.*, Maturata (March 25th), Ambagamuwa (April 5th), Peradeniya (May and June), and extended observations have elicited the following information:—

From the top, opposite the stalked end, a stiff tubular prolongation of the turnip-shaped body is sent up: the colored contents pass in, and when it has reached a length equal to six or eight times that of the original body four partitions have cut the tube into as many chambers. From each chamber, a delicate lateral branch is sent forth, which at once buds off a small globule at its tip: this globule receives the colored contents, falls off, and persists, while the rest dies. Here, again, I think we are justified in concluding that the turnip-shaped body is a spore: that on germination it produces a short tubular, septate mycelium, whence small spores of another kind (*conidia*) are budded off—such cases of different kinds of reproductive bodies are well known to all mycologists.

The small globular spores have been made to germinate, but died at an early stage in all cases from the attacks of introduced organisms (*Bacteria Torulæ*) &c., which are so troublesome in these experiments.

(5)—The question what becomes of the long and curled tubes emitted by the papillate spores has been followed up with more success lately. The following facts have been obtained by growing the spores on the under side of thin glass squares, so arranged as to form the roof of a small cell kept moist by wet blotting paper: various contrivances to avoid the introduction of foreign fungi need not here be detailed.

Having attained a considerable length, all the coloring matter, &c., passes along a branch, and a pear-shaped swelling is formed at its end: this receives all the contents, a septum forms for the first time, and we have a swollen reddish body separated off from the empty tube and spore, which shortly die off.

This colored body has been seen to send out branches. A number of rather large hyaline motile bodies (zoospores) generally make their appearance, and two of these have been seen to fuse. The connection between these various facts demands further enquiry.

(6)—Besides numerous examinations in Peradeniya, no opportunity was lost during my journeys to study the vegetable forms which appear on the exterior of coffee: in all, I have drawings of about a dozen different kinds of spore or of filamentous growths common on the leaves. Of these, several are obviously blown by the wind on to the leaves; some germinate freely while others do not appear to do so, while one or two have been traced to common forms abundant everywhere.

It is not proposed to describe here the various spores met with. Obviously, while it will be necessary to trace the origin and destination of each form until we are either sure it is foreign or is connected with "leaf-disease," the kind of enquiry thus instituted presents no ordinary difficulties; until we are quite satisfied as to which of the filaments, if any, belongs to *Hemileia*, we are in the dark respecting one phase of its life-history, and until we know the whole of its life-history remedial measures are premature.

(7)—Numerous attempts to directly infect coffee plants with "leaf-disease" have as yet failed. I may select the following from a multitude of examples as to methods adopted.

1.—Papillate spores were sown on the under side of a young leaf, covered with a glass cell, and placed in various positions, temperatures, and dry or moist atmospheres.

2.—Similar sowings were made on thin slices of coffee leaf kept moist in glass cells: some in water, others in various solutions.

3.—Sections of "disease-spots" were treated as above to try and induce the mycelium to spread from the leaf passages, either on to other slices or on to the coffee leaf.

4.—Several of the spores found on the coffee leaf have been sown as above. The chief cause of failure here has been the unavoidable introduction of other forms which increase so rapidly as to destroy the selected ones before their normal fate has become indicated.

In drawing any conclusions from these experiments, too much stress cannot be laid upon the fact that however carefully we plan an experiment in the laboratory, we fall short of nature's conditions: further, it must be admitted that until the fate of the various forms found on coffee is ascertained, we may have missed a phase in the life-history of "Hemileia." I am, therefore, pursuing closely the different changes passed through by these spores and their products, and hope to place the results before you in a future report.

In conclusion, I feel justified in drawing these inferences from what has been seen so far. Derived from some source purely external, a fungoid organism finds its way into the passages between the cells of the leaf: here it has a term of existence shewn to the observer by the origin and spread of the yellow "disease spots," caused by the changes in consistence and color of the leaf contents at those places.

The out-break of the yellow "rust" from the leaf-passages, through the stomata takes place when the leaf begins to fail in supplying sap. Such an explanation is in accordance with all the facts yet known to me, and also with the present state of physiology. In seedlings, the cotyledons especially become yellow, and in older plants the lower leaves usually suffer first: on wind-blown ridges, quartz patches and dry soil generally, bad attacks of rust are conspicuous when more sheltered and moist portions of the estate do not appear to be suffering: in sudden dry weather "an attack" commonly comes over an estate, while during the last stages of crop "leaf-disease" is often very bad.

Now if the mycelium, ramifying among the loose cells of the leaf, is absorbing its food from those cells, as is well-known to be the habit of such parasites, we can see how so much more work is thrown upon the plant. Whereas a leaf normally supplies a certain quantity of elaborated food for the tree in a given time, we have here the same leaf compelled to provide food for tree *and fungus*—its cells must work the harder and its life be the shorter.

Until we fail to account for the ravages of leaf-disease according to known principles we have no right to seek an explanation elsewhere. Many and in some cases elaborate experiments are being planned to establish the important point as to what actually occurs between the fall of the leaf, with its "rust" and mycelium, and the re-appearance of the yellow "pin-spots": I have already indicated the direction in which these are leading, and it only remains to patiently carry on research. When it is remembered that these germinating spores have to be kept under observation during the night as well as day, that all kinds of minute organisms have to be guarded against, and hence that out of many attempts few succeed, I hope that the importance of this plan will be admitted.

In conclusion I must beg to be allowed to thank the planters and other gentlemen who have so kindly and efficiently aided me thus far in what has become to me a labor of love.

I have, &c.,

H. MARSHALL WARD, B. A., Cantab.

Cryptogamist.

SECOND SUPPLEMENT TO THE

MYSORE GAZETTE

No. 35 Published by Authority. of 1880.

BANGALORE, SATURDAY, SEPTEMBER 4, 1880.

OFFICIAL PAPERS.

Abstract of Season or Intermediate Reports for the Week ending 28*th August* 1880.

Bangalore District.—Twenty-seven cents of rain at Bangalore. Crops in good condition. Prospects fair. Public health good. Price of ragi slightly fallen.

Kolar District.—Nine cents of rain at Kolar. Want of rain is much felt. Standing crops withering in some parts. Prospects uncertain. Public health generally good. Cattle disease abating. Prices stationary.

Túmkúr District.—Rain-fall 27 cents at Túmkúr. Standing dry crops in good condition in some parts, but withering in others from want of rain. Prospects indifferent. Public health good.

Mysore District.—Forty-one cents of rain at Mysore. Standing crops of ragi, togari and paddy doing well. Prospects of season very good. Public health good. Prices stationary.

Hassan District.—Sixty-four cents of rain at Hassan. Crops in good condition, except in the Belur Taluk and in part of the Haranhalli Taluk where they are in a backward state from want of rain. Gid-ragi, sesamum and jola were harvested. Prospects hopeful. Public health good, except in parts of the Hassan and Haranhalli Taluks where ague and fever prevail. Cattle disease still prevalent. Price of rice has risen ; that of ragi remains stationary.

Shimoga District.—Twenty-eight cents of rain at Shimoga. Standing crops much in need of rain, especially paddy, which is withering everywhere except in the Kavaledurga Taluk. Arecanut still suffers from rot in the Malnad taluks. Prospects not favorable. Fever and bowel-complaints prevalent, as well as murrain among cattle. Prices stationary.

Kadur District.—Rain-fall nil. Crops in good condition except in the Kadur and Banavar Taluks, where much ragi land has been left unsown, and the standing dry crops therein withering in many parts. The want of rain is much felt in the Maidan taluks and in Koppa. Prospects good. Public health generally good. Cattle disease prevalent.

Chitaldroog District.—Crops in bad condition owing to the failure of the rains. If no rain falls during the next week, the crops will suffer to a great extent. Prospects unfavorable. Fever prevalent in parts. Prices generally stationary.

Coorg.—Rain-fall 1 inch 42 cents. Rice and ragi doing well. Coffee crop small. Health fair.

By Order,

C. RANGACHARLU,
Revenue Secretary.

Prices Current of Food Grains in the Provinces of Mysore and Coorg during the Fortnight ending 15th August 1880.

QUANTITY PER RUPEE BY THE STANDARD SEERS OF 80 TOLAS: *vide* GOVERNMENT OF INDIA NO. 1—21, DATED 10TH FEBRUARY 1874.

| Fortnight ending— | No. | Districts. | Shops | Wheat. Present Fortnight. seers. | Wheat. Present Fortnight. chittaks | Wheat. Present Fortnight. s. | Wheat. Present Fortnight. c. | Wheat. Past Fortnight. s. | Wheat. Past Fortnight. c. | Wheat. Corresponding Fortnight in 1879. s. | Wheat. Corresponding Fortnight in 1879. c. | Barley. Present Fortnight. s. | Barley. Present Fortnight. c. | Barley. Past Fortnight. s. | Barley. Past Fortnight. c. | Barley. Corresponding Fortnight in 1879. s. | Barley. Corresponding Fortnight in 1879. c. | Rice, best sort. Present Fortnight. s. | Rice, best sort. Present Fortnight. c. | Rice, best sort. Past Fortnight. s. | Rice, best sort. Past Fortnight. c. | Rice, best sort. Corresponding Fortnight in 1879. s. | Rice, best sort. Corresponding Fortnight in 1879. c. | Rice, common. Present Fortnight. s. | Rice, common. Present Fortnight. c. | Rice, common. Past Fortnight. s. | Rice, common. Past Fortnight. c. | Rice, common. Corresponding Fortnight in 1879. s. | Rice, common. Corresponding Fortnight in 1879. c. | Great Millet, (Jola, Javar) *Holcus Sorghum.* Present Fortnight. s. | Great Millet. Present Fortnight. c. | Great Millet. Past Fortnight. s. | Great Millet. Past Fortnight. c. | Great Millet. Corresponding Fortnight in 1879. s. | Great Millet. Corresponding Fortnight in 1879. c. | Bulrush Millet, (Kambu, Bajra) *Penicillaria Spicata.* Present Fortnight. s. | Bulrush Millet. Present Fortnight. c. | Bulrush Millet. Past Fortnight. s. | Bulrush Millet. Past Fortnight. c. | Bulrush Millet. Corresponding Fortnight in 1879. s. | Bulrush Millet. Corresponding Fortnight in 1879. c. | Lesser Millets, Ragi, &c., (Kavaru, Varagu, Save, China, Koralu, Marwa, Nagli, &c.) *Panicum Miliaceum, Eleusine, Coracana, &c.* Present Fortnight. s. | Lesser Millets. Present Fortnight. c. | Lesser Millets. Past Fortnight. s. | Lesser Millets. Past Fortnight. c. | Lesser Millets. Corresponding Fortnight in 1879. s. | Lesser Millets. Corresponding Fortnight in 1879. c. | Gram. Present Fortnight. s. | Gram. Present Fortnight. c. | Gram. Past Fortnight. s. | Gram. Past Fortnight. c. | Gram. Corresponding Fortnight in 1879. s. | Gram. Corresponding Fortnight in 1879. c. | Firewood. Present Fortnight. s. | Firewood. Present Fortnight. c. | Firewood. Past Fortnight. s. | Firewood. Past Fortnight. c. | Firewood. Corresponding Fortnight in 1879. s. | Firewood. Corresponding Fortnight in 1879. c. | Salt. Present Fortnight. s. | Salt. Present Fortnight. c. | Salt. Past Fortnight. s. | Salt. Past Fortnight. c. | Salt. Corresponding Fortnight in 1879. s. | Salt. Corresponding Fortnight in 1879. c. |
|---|---|---

SUPPLEMENT TO THE

MYSORE GAZETTE

No. 36 Published by Authority. of 1880.

BANGALORE, SATURDAY, SEPTEMBER 11, 1880.

OFFICIAL PAPERS.

Abstract of Season or Intermediate Reports for the Week ending 4th September 1880.

Bangalore District.—Ninety-three cents of rain at Bangalore. Crops in good condition. Prospects favorable. Public health good. Prices generally stationary.

Kolar District.—One inch, 68 cents of rain at Kolar. Standing crops are improving. Prospects hopeful. Public health good. Prices fallen.

Túmkúr District.—Sixty-four cents of rain at Túmkúr. Rain fell in all the taluks. Standing crops in good condition. Prospects favorable. Public health good.

Mysore District.—Sixty-two cents of rain at Mysore. Standing crops thriving. Ragi, jolam and sesamum being harvested. Prospects of season very good. Public health good. Prices steady.

Hassan District.—Ninety-seven cents of rain at Hassan. Crops in good condition, except in parts of Haranhalli Taluk, where they are withering from want of rain. Gid-ragi is being harvested and the sowing of horse-gram has commenced. Prospects encouraging. Public health good. Cattle are thriving. Prices generally stationary.

Shimoga District.—Two inches, 37 cents of rain at Shimoga. Standing crops, which were withering, have revived from the seasonable falls of rain. More rain wanted for the paddy crop. Prospects improved. Fever and lung affections on the increase. Cattle still suffer from murrain. Prices generally stationary.

Kadur District.—Ninety-two cents of rain at Chikmagalur. Crops generally in good condition except in the Banavar Taluk, where some are withering from want of rain. Arecanut crop rotting in the Malnad taluks. Prospects generally good, but rain much needed in the Maidan taluks especially Banavar. Public health good. Cattle disease prevalent throughout the District.

Chitaldroog District.—Eighty-seven and half cents of rain at Chitaldroog. Crops have assumed a healthy appearance owing to recent falls of rain. More rain is very much wanted. Prospects not satisfactory. Fever prevalent in parts of the Dodéri and Hiriyur Taluks. Prices fallen.

Coorg.—Rain-fall 2 inches 10 cents. Rice and ragi thriving. Coffee crop small. Health good.

By Order,

C. RANGACHARLU,
Revenue Secretary.

Mysore Government Press, Bangalore.—1880.

SUPPLEMENT TO THE

MYSORE GAZETTE

No. 37 Published by Authority. of 1880.

BANGALORE, SATURDAY, SEPTEMBER 18, 1880.

OFFICIAL PAPERS.

Abstract of Season or Intermediate Reports for the Week ending 11*th September* 1880.

Bangalore District.—One inch, 16 cents of rain at Bangalore. Crops in good condition. Prospects favorable. Public health good. Price of ragi fallen, that of rice slightly risen.

Kolar District.—Ninety cents of rain at Kolar. Standing crops in good condition. Kartik wet crops have failed. Prospects good as regards dry crops. Public health good. Prices stationary.

Túmkúr District.—One inch, 98 cents of rain at Túmkúr. Standing crops in good condition. Prospects hopeful. Public health good.

Mysore District.—Two inches, 73 cents of rain at Mysore. Standing crops in good condition. Prospects very good. Public health good. Prices stationary.

Hassan District.—Fifty-four cents of rain at Hassan. Crops in good condition. More rain is needed for the paddy crop in the Belur Taluk. Gid-ragi and sugar-cane are being reaped in parts. Prospects favorable. Public health good. Rinderpest has disappeared in the Taluks of Belur, Arkalgúd and Channaraypatna, and has abated in the remaining taluks. Prices stationary.

Shimoga District.—One inch, 35 cents of rain at Shimoga. Standing crops in pretty fair condition. More rain wanted for the paddy crop. Arecanut is reviving from rot. Prospects favorable. Public health bad; fevers and lung affections prevalent. Murrain still prevalent among cattle. Prices stationary.

Kadur District.—One inch, 7 cents of rain at Chikmagalur. Crops in good condition generally. Those in the Banavar Taluk have revived after recent rains and promise well. Transplanting of paddy almost completed. Arecanut crop rotting in the Malnad taluks. Gid ragi harvested in Chikmagalur. Rain fell generally throughout the District. Prospects fair. Public health generally good. Cattle disease still prevalent.

Chitaldroog District.—Two inches, 14 cents of rain at Chitaldroog. Recent rains have saved the withering crops, which are getting into better condition. Prospects somewhat hopeful. Public health good. Cattle disease in parts of the Dodéri and Hiriyur Taluks. Price of ragi risen.

Coorg.—Rain-fall at Mercara 3 inches, 84 cents. Rice thriving. Ragi less promising. Coffee crop small. Health good.

By Order,

C. RANGACHARLU,
Revenue Secretary.

Prices Current of Food Grains in the Provinces of Mysore and Coorg during the Fortnight ending 31*st August* 1880.

QUANTITY PER RUPEE BY THE STANDARD SEERS OF 30 TOLAS. *vide* GOVERNMENT OF INDIA NO. 1—21. DATED 10TH FEBRUARY 1874.

| Fortnight ending— | No. | Districts. | Shops | Wheat. Present Fortnight. | | Wheat. Past Fortnight. | | Wheat. Corresponding Fortnight in 1879. | | Barley. Present Fortnight. | | Barley. Past Fortnight. | | Barley. Corresponding Fortnight in 1879. | | Rice, best sort. Present Fortnight. | | Rice, best sort. Past Fortnight. | | Rice, best sort. Corresponding Fortnight in 1879. | | Rice, common. Present Fortnight. | | Rice, common. Past Fortnight. | | Rice, common. Corresponding Fortnight in 1879. | | Great Millet, (Jola, Javar) *Holcus Sorghum.* Present Fortnight. | | Great Millet. Past Fortnight. | | Great Millet. Corresponding Fortnight in 1879. | | Bulrush Millet, (Kambu, Bajra) *Penicillaria Spicata.* Present Fortnight. | | Bulrush Millet. Past Fortnight. | | Bulrush Millet. Corresponding Fortnight in 1879. | | Lesser Millets, Ragi, &c., (Kavaru, Varagu, Save, China, Koralu, Marwa, Nagli, &c.) *Panicum Miliaceum, Eleusine, Coracana, &c.* Present Fortnight. | | Lesser Millets. Past Fortnight. | | Lesser Millets. Corresponding Fortnight in 1879. | | Gram. Present Fortnight. | | Gram. Past Fortnight. | | Gram. Corresponding Fortnight in 1879. | | Firewood. Present Fortnight. | | Firewood. Past Fortnight. | | Firewood. Corresponding Fortnight in 1879. | | Salt. Present Fortnight. | | Salt. Past Fortnight. | | Salt. Corresponding Fortnight in 1879. | |
|---|---|---

SUPPLEMENT TO THE

MYSORE GAZETTE.

No. 38 Published by Authority. of 1880.

BANGALORE, SATURDAY, SEPTEMBER 25, 1880.

OFFICIAL PAPERS.

Abstract of Season or Intermediate Reports for the Week ending 18*th September* 1880.

Bangalore District.—One inch, 22 cents of rain at Bangalore. Crops in good condition. Prospects of season fair. Public health good. Price of rice fallen, that of ragi risen.

Kolar District.—Sixty-five cents of rain at Kolar. Standing crops generally in good condition, but rain is wanted for them. Prospects hopeful. Public health good. Prices stationary.

Túmkúr District.—One inch, 56 cents of rain at Túmkúr. Standing crops generally in good condition; more rain needed for dry crops in parts of the Koratagere and Honnavalli Taluks. Prospects of season and public health good.

Mysore District.—Twenty-four cents of rain at Mysore. Standing crops in good condition. Prospects very good. Public health good. Prices stationary.

Hassan District.—Forty cents of rain at Hassan. Crops in good condition. More rain needed for the paddy crops in the Arkalgúd and Belur Taluks. Wheat, paddy, gid-ragi, jola, sugar-cane, &c., were harvested. Prospects hopeful. Public health good. Rinderpest among cattle abating, except in the Kikkeri Hobli of the Attikuppa Taluk where the losses are still heavy. Price of 1st sort rice and of horse-gram fallen; that of 2nd sort rice and horse-gram stationary.

Shimoga District.—One inch, 27 cents of rain at Shimoga. Standing crops in fair condition. The paddy crop is in need of more rain. Garden prospects have greatly improved. Prospects of season encouraging. Public health fair. Cattle still suffer from murrain. Prices stationary.

Kadur District.—Twenty-three cents of rain at District Head-quarters. Rain wanted in parts of the Banavar Taluk. Crops in generally good condition. Rot among arecanut crops still prevalent in the Malnad Taluks. Prospects fair. Public health generally good. Cattle disease prevalent throughout the District.

Chitaldroog District.—Twenty-two cents of rain at Chitaldroog. Crops in good condition, except in the Hosdurga Taluk, where they are fading. Rain is much required. Navane, gram and cotton seeds were sown. Prospects fair. Public health good. No epidemic disease prevailed among cattle. Price of ragi and javari fallen.

Coorg.—Rain-fall 3 inches, 47 cents at Mercara. Rice thriving. Ragi harvest commenced; crop rather short. Coffee crop small. Health good.

By Order,

C. RANGACHARLU,
Revenue Secretary.

PROVINCE OF MYSORE.

Rain-fall and Season Report for the month of June 1880.

Districts.	Total Rain-fall in all the Taluks of the District.				Particulars of supply of water, by rain to tanks.				Kandayam Lands newly taken up for cultivation and for which Razinamas have been tendered.										Seeds sown in June 1880.	State of Crops in June 1880.	Crops harvested in June 1880.
					No. of tanks supplied with water.		No. of tanks not supplied with water.		Kandayam of lands newly taken up for cultivation.						Kandayam of lands for which Razinamas have been tendered.						
	In June 1879.		In June 1880.		In June 1879.	In June 1880.	In June 1879.	In June 1880.	In June 1879.			In June 1880.			In June 1879.			In June 1880.			
	I.	C.	I.	C.	No.	No.	No.	No.	Rs.	A.	P.	Rs.	A.	P.	Rs.	A.	P.	Rs.	A.	P.			
igalore...	7	20	14	47	309	453	1,441	1,297	1,576	10	11	4,232	1	8	0	0	0	0	0	0	Ragi, ballar, tuvar, and samé.	Good.	Vaisak paddy.
ar ...	11	36	19	27	30	200	3,337	3,167	1,349	10	8	765	6	9	0	0	0	26	13	0	Sajjé, harka, sesamum, ragi, ballar and tuvar.	Good in some places and indifferent in others owing to want of rain.	Nil.
nkúr ..	13	58	22	56	58	339	753	1,001	3,655	7	6	4,668	3	0	28	0	0	16	0	0	Paddy, ragi, tuvar, harka, black and green-gram, samé javari, castor oil-seeds and sugar-cane.	Good.	Vaisak wet crops in Sira, Kunigal and Kadaba.
sore ...	12	75¾	21	43	732	765	496	463	775	5	5	703	5	8	0	0	0	0	0	0	Tuvar, paddy, sugar-cane, ragi, wheat, ballar, harka, &c.	Good.	Black and green gram in Ashtagram and Mandya, sesamum in Mandya.
san ...	36	95	35	76¼	2,931	2,610	...	321	666	15	0	1,471	5	7	0	0	0	0	0	0	Paddy, ragi, ballar, harka, gingelly, tuvar and black gram.	Good.	Vaisak paddy, green and black gram.
moga ...	148	¾	124	47¼	4,844	3,805	47	1,060	2,739	1	0	2,909	9	0	4,069	10	0	3,381	9	4	Paddy, ragi, javari, sesamum, green gram and coriander.	Good.	Nil.
lur ...	81	72	74	41¼	2,968	1,846	112	1,234	2,685	13	11	6,201	10	6	1,753	0	0	12	8	0	Sugar-cane, black and green gram, javari, coriander, paddy, gingelly, navane, ballar, ragi, chillies and oil-seeds.	Good.	Sugar-cane crops are being harvested.
taldroog	10	60¼	28	35¾	753	409	246	590	3,380	7	0	3,843	2	0	0	0	0	31	8	0	Javari, black and green-gram, gingelly, castor oil-seed, ragi, paddy, samé, sajjé, harka, tuvar, navane and baragu.	Good.	No crops harvested during the month.
tal.....	322	17¾	340	73½	13,154	10,427	6,432	9,133	16,829	7	5	24,794	12	2	5,850	10	0	3,468	6	4			

Dated 18*th September* 1880.

By Order,

T. SRINIVASAIENGAR,

For Revenue Secretary.

Mysore Government Press, Bangalore—1880.

SUPPLEMENT TO THE

MYSORE GAZETTE.

No. 39 Published by Authority. of 1880.

BANGALORE, SATURDAY, OCTOBER 2, 1880.

OFFICIAL PAPERS.

Abstract of Season or Intermediate Reports for the Week ending 25th September 1880.

Bangalore District.—Crops generally in good condition. Prospects fair. Rain much needed. Public health good, but fever prevalent in parts, also murrain among cattle. Price of rice fallen, and that of ragi stationary.

Kolar District.—Crops withering. Rain very much needed. Most of the tanks are yet empty. Prospects discouraging. Public health good. Prices stationary.

Túmkúr District.—Standing crops withering. Rain much wanted. Prospects fair. Public health good.

Mysore District.—Standing crops thriving. Prospects very good. Health good. Prices stationary.

Hassan District.—The crops in the eastern taluks are beginning to suffer from want of rain. Good crops of jola, gid-ragi, coriander, wheat, &c., are being reaped. Prospects fair. Health good, except in Haranhalli where fever prevails. Rinderpest among cattle still prevalent in the Taluks of Hassan, Attikuppa, Narsipur and Haranhalli. Prices stationary.

Shimoga District.—Fifty-five cents of rain at Shimoga. Standing crops in fair condition. The want of more rain for the paddy crop is much felt. Arecanut and cardamoms are being gathered. Prospects of season and public health fair. Murrain on the increase. Prices stationary.

Kadur District.—Crops in good condition, except in parts of the Banavar Taluk, where they are withering from want of rain. Prospects good, except in parts of the Banavar Taluk, where sowing operations are in a very backward state. Rain much needed in this taluk. Health generally good. Cattle disease prevalent. Prices stationary.

Chitaldroog District.—Twenty-seven cents of rain at Chitaldroog. None in other parts of the District. Crops fading in several parts of the District, and in good condition in others. Prospects gloomy. If no rain falls for a week or so, crops will suffer considerably. Public health good, except in the Hiriyur Taluk where fever prevails. Price of ragi and javari has risen.

Coorg.—Rain-fall 96 cents. More rain wanted in some places. Rice generally thriving. Ragi crop short. Coffee crop small. Health good.

By Order,

C. RANGACHARLU,
Revenue Secretary.

Mysore Government Press, Bangalore.—1880.

SUPPLEMENT TO THE

MYSORE GAZETTE.

No. 40 Published by Authority. of 1880.

BANGALORE, SATURDAY, OCTOBER 9, 1880.

OFFICIAL PAPERS.

Abstract of Season or Intermediate Reports for the Week ending 2nd October 1880.

Bangalore District.—Seven cents of rain at Bangalore. Crops generally in good condition. Prospects fair. Rain much needed. Public health good. Fever prevalent in parts. Prices risen.

Kolar District.—One inch 67 cents of rain at Kolar. Crops thriving owing to recent fall of rain. More rain needed. Prospects encouraging. Public health good. Prices stationary.

Túmkúr District.—Seventeen cents of rain at Túmkúr. Rain fell in parts of the District. Standing crops doing pretty well except in Koratagere. Prospects of season and public health good.

Mysore District.—Two inches 91 cents of rain at Mysore. Crops in very good condition, and have benefited by recent rains. Prospects of season and public health good. Price of rice fallen slightly; that of ragi is stationary.

Hassan District.—Sixty-five cents of rain at head-quarters. Crops have revived by the recent showers, but more rain is needed in several parts. Gid-ragi was reaped in the Arkalgúd and Attikuppa Taluks. Prospects favorable. Public health good. The price of rice and ragi has risen.

Shimoga District.—Fourteen cents of rain at Shimoga. Standing crops in fair condition. The want of rain much felt. Arecanut and cardamoms being picked. Failure of the paddy crop is apprehended from want of sufficient rain. Prospects fair. Health fairly good. Small-pox has broken out in the Kavaledurga Taluk. Murrain prevalent. Prices stationary.

Kadur District.—Fifty-eight cents of rain at Chikmagalur. Crops in the Málnad in good condition, except in parts of the Múdgere Taluk, where the paddy suffers from "Kâte-roga." Crops in the Maidan are in need of rain. Prospects good, except in the Banavar Taluk. Public health good. Murrain prevalent throughout the District.

Chitaldroog District.—One inch 25 cents of rain at Chitaldroog. Crops in a fading condition, but rain has fallen in parts of the District. Prospects of season somewhat encouraging since the last fall of rain. Fever prevalent in 3 taluks. Small-pox has appeared in the Chitáldroog Taluk. Prices generally stationary.

Coorg.—Rain-fall 1 inch 73 cents. Rice in South Coorg wants rain. Elsewhere flourishing. Ragi crop short. Coffee crop small. Health good.

By Order,

C. RANGACHARLU,
Revenue Secretary.

Prices Current of Food Grains in the Provinces of Mysore and Coorg during the Fortnight ending 15*th September* 1880.

QUANTITY PER RUPEE BY THE STANDARD SEERS OF 80 TOLAS, *vide* GOVERNMENT OF INDIA NO. 1—21, DATED 10TH FEBRUARY 1874.

| Fortnight ending— | No. | Districts. | Shops | Wheat. Present Fortnight. | | Wheat. Past Fortnight. | | Wheat. Corresponding Fortnight in 1879. | | Barley. Present Fortnight. | | Barley. Past Fortnight. | | Barley. Corresponding Fortnight in 1879. | | Rice, best sort. Present Fortnight. | | Rice, best sort. Past Fortnight. | | Rice, best sort. Corresponding Fortnight in 1879. | | Rice, common. Present Fortnight. | | Rice, common. Past Fortnight. | | Rice, common. Corresponding Fortnight in 1879. | | Great Millet, (Jola, Javar) *Holcus Sorghum.* Present Fortnight. | | Great Millet. Past Fortnight. | | Great Millet. Corresponding Fortnight in 1879. | | Bulrush Millet, (Kambu, Bajra) *Penicillaria Spicata.* Present Fortnight. | | Bulrush Millet. Past Fortnight. | | Bulrush Millet. Corresponding Fortnight in 1879. | | Lesser Millets, Ragi, &c., (Kavaru, Varagu, Save, China, Koralu, Marwa, Nagli, &c.) *Panicum Miliaceum, Eleusine, Coracana, &c.* Present Fortnight. | | Lesser Millets. Past Fortnight. | | Lesser Millets. Corresponding Fortnight in 1879. | | Gram. Present Fortnight. | | Gram. Past Fortnight. | | Gram. Corresponding Fortnight in 1879. | | Firewood. Present Fortnight. | | Firewood. Past Fortnight. | | Firewood. Corresponding Fortnight in 1879. | | Salt. Present Fortnight. | | Salt. Past Fortnight. | | Salt. Corresponding Fortnight in 1879. | |
|---|---|---

SUPPLEMENT TO THE

MYSORE GAZETTE.

No. 41 Published by Authority. of 1880.

BANGALORE, SATURDAY, OCTOBER 16, 1880.

OFFICIAL PAPERS.

Abstract of Season or Intermediate Reports for the Week ending 9th October 1880.

Bangalore District.—Two inches 7 cents of rain at Bangalore. Crops generally in good condition. Prospects favorable. Public health good, but fever and ague prevalent in parts. Prices slightly fallen.

Kolar District.—Want of rain felt. Crops withering in parts of the District. Prospects uncertain. Public health good. Prices stationary.

Túmkúr District.—One inch 31 cents of rain at Túmkúr. Rain fell in all the taluks. Standing crops improving. Prospects of season and public health good.

Mysore District.—Sixty-two cents of rain at Mysore. Standing crops thriving. Prospects very good. Public health good. Prices stationary.

Hassan District.—Seven inches 42 cents of rain at Hassan. Recent rains have benefited the crops, which are doing well everywhere. Prospects of season very good. Public health satisfactory. Cattle disease abating. Prices stationary.

Shimoga District.—Fifty-three cents of rain at Shimoga. Dry crops in fair condition. Want of rain much felt in the Honnali Taluk where the crops are withering. Garden prospects good. Arecanut and cardamoms are being picked. Prospects of season and public health fair. Cattle disease very prevalent, and mortality therefrom high. Prices stationary.

Kadur District.—Two inches 36 cents of rain at head-quarters. Crops in good condition generally. Those in the Banavar Taluk have improved, but more rain wanted in this taluk and in the Maidan parts of the District. The arecanut crop is suffering from rot in the Koppa and Lakvalli Taluks. Prospects of season and public health good.

Chitaldroog District.—One inch 22 cents of rain at Chitaldroog. Rain fell in all the taluks, and the crops have generally improved thereby. Prospects of season favorable at present. Health good. Cattle disease prevalent in the Taluks of Chitaldroog, Pavagada and Hiriyur. Price of rice slightly risen.

Coorg.—Rain-fall at Mercara 4 inches 1 cent. Rice thriving. Ragi and coffee crop poor. Health good.

By Order,

T. SRINIVASAIENGAR,
For Revenue Secretary.

Mysore Government Press, Bangalore.—1880.

SUPPLEMENT TO THE

MYSORE GAZETTE.

No. 42 Published by Authority. of 1880.

BANGALORE, SATURDAY, OCTOBER 23, 1880.

OFFICIAL PAPERS.

Abstract of Season or Intermediate Reports for the Week ending 16*th October* 1880.

Bangalore District.—Ninety-nine cents of rain at Bangalore. Crops in good condition. Prospects very favorable. Health good. Fever prevalent in parts. Prices stationary.

Kolar District.—Twenty-three cents of rain at Kolar. Crops are reviving. Prospects hopeful. Public health good. Prices risen.

Túmkúr District.—Thirty-eight cents of rain at Túmkúr. Slight showers fell in the taluks. Crops in fairly good condition. Prospects good. Health generally good.

Mysore District.—Four inches 45 cents of rain at Mysore. Standing crops flourishing. Prospects of season very good. Public health good. Prices stationary.

Hassan District.—Thirty-five cents of rain at Hassan. Crops in good condition generally; coriander, black-gram, wheat, &c., being reaped in the Haranhalli Taluk, and sugar-cane in Nagamangala. Prospects favorable. Public health good. Cattle disease abating. Prices fallen.

Shimoga District.—Two cents of rain at Shimoga. Rain much wanted, the tanks being still empty. Standing dry crops in fair condition except in the Honnali Taluk where they are withering. Ragi being harvested in some taluks, the out-turn being a 12 anna crop. Arecanut and cardamoms are being picked. Prospects of season not very good. Public health fair. Cattle disease prevalent. Prices stationary.

Kadur District.—Eighty-six cents of rain at Chikmagalur. Crops in good condition generally, but more rain wanted for the paddy crop in parts of the Lakvalli Taluk. Arecanut being picked in the Malnad taluk. Prospects of season and public health good. Cattle disease still prevalent.

Chitaldroog District.—Thirty-five cents of rain at Chitaldroog. Crops thriving, but more rain required. Javari, sajje, navane, and black gram were harvested in parts. Prospects favorable at present. Health good. Cattle disease prevalent in parts. Price of ragi considerably fallen.

Coorg.—Rain-fall at Mercara 59 cents. Rice thriving. Ragi mostly reaped. Crop short. Coffee ripening. Crops small. Health good.

By Order,

T. SRINIVASAIENGAR,
For Revenue Secretary.

Mysore Government Press, Bangalore.—1880.

SUPPLEMENT TO THE

MYSORE GAZETTE.

No. 43 Published by Authority. of 1880.

BANGALORE, SATURDAY, OCTOBER 30, 1880.

PUBLIC WORKS DEPARTMENT.

The 13th September 1880.

No. 299.

Circular No. 17 Railway, dated Simla, 21st August 1880.

GENERAL RULES FOR INDIAN RAILWAYS.

READ again—

Section 8 of Act IV, the Indian Railway Act of 1879.

Government of India, Public Works Department, Resolution Nos. 0210-0227 R. T., dated the 23rd February 1880.

Government of India, Public Works Department, letter Nos. 312-22 R. T., dated the 10th May 1880.

READ also—

Letter No. 1148, dated 20th March 1880, from the Consulting Engineer, Calcutta.

Letter No. 199 R., dated 21st April 1880, from the Government of the North-Western Provinces and Oudh.

Docket No. 3157 G., dated 4th May 1880, from the Consulting Engineer, Lahore, and annexure.

Letter No. 82 C., dated 18th May 1880, from the Chief Commissioner, Central Provinces.

Letter No. 2058, dated 26th May 1880, from the Consulting Engineer, Calcutta.

Docket No. 1045, dated 28th May 1880, from the Consulting Engineer, Lucknow, and annexure.

Memorandum No. 4069 G., dated 3rd June 1880, from the Consulting Engineer, Lahore.

Letter No. 1460, dated 3rd June 1880, from the Government of Bombay, and enclosures.

Letter No. 478S.-R., dated 4th June 1880, from the Government of Bengal.

Letter No. 158R. G., dated 5th June 1880, from the Resident at Hyderabad.

Docket No. 2298, dated 8th June 1880, from the Consulting Engineer, Calcutta, and enclosures.

Letter No. 705R., dated 14th June 1880, from the Government of the North-Western Provinces and Oudh.

Letter Nos. 2818-66E.-R., dated 9th June 1880, from the Chief Commissioner, British Burma.

Letter No. 348B.-R., dated 16th June 1880, from the Government of Madras, and enclosures.

Letter No. 1757, dated 8th July 1880, from the Government of Bombay, and enclosures.

Government of India, Public Works Department, letter No. 821R.-T., dated 4th August 1880, to the Government of Madras.

Government of India, Public Works Department, letter No. 822R.-T., dated 4th August 1880, to the Government of Bombay.

Government of India, Public Works Department, letter No. 823R.-T., dated 4th August 1880, to the Consulting Engineer, Lahore.

Resolution.—The Governor General in Council is pleased, in supersession of all previous rules on the subject, to sanction, with effect from the 1st October 1880, the accompanying General Rules which have been made by the several Railway Administrations under Section 8 of the Indian Railway Act, 1879, for regulating the travelling upon, and the use, working and management of the, railways, respectively directed by such administrations.

Order.—Ordered, that this Resolution be communicated to the Local Governments, Administrations and Officers noted in the margin for information and guidance.

The Government of Madras, Bombay, Bengal, the North-Western Provinces and Oudh, and the Punjab.
The Chief Commissioners, Central Provinces, British Burma and Assam.
The Resident at Hyderabad.
The Agents to the Governor General for Rajputana, Central India and Beluchistan.
The Directors General of Railways and Telegraphs.
The Consulting Engineers to the Government of India for Guaranteed Railways.

Also to the Foreign Department for communication to the Chief Commissioner of Mysore and Coorg.

Ordered also, that this Resolution, together with the General Rules, be published in the *Gazette of India*, as directed by Section 8 of the Indian Railway Act of 1879.

INDIAN RAILWAYS.

GENERAL RULES FOR ALL RAILWAYS IN INDIA

MADE IN CONFORMITY WITH SECTION 8 OF "THE INDIAN RAILWAY ACT, 1879."

The rules comprised in this code shall be held applicable to, and are to be observed on, all lines of Railway in India used for the public conveyance of passengers or goods, unless specially exempted by the Governor General in Council.

Each Railway Administration may hereafter make such subsidiary rules as may be found necessary or expedient, provided that no such subsidiary rule shall be inconsistent with these general rules.

Every Railway servant is bound by the terms of his employment to obey both the general and the subsidiary rules.

SECTION I.

INTERPRETATION CLAUSES AND DEFINITIONS.

Catchwords.

The catchwords in the margin of this code have been added merely for the purpose of facilitating reference; they are not to be held either as an integral part of the code, or in any way giving an interpretation to the clauses to which they are annexed.

Definitions.

2. In the rules comprised in this code unless there is something repugnant in the subject or context:—

Written.

"Written" instructions, orders, forms, &c., include documents which are printed, lithographed, or prepared by other processes, and instructions which are sent by telegram;

Main line.

"Main line" means the line ordinarily used by trains to run through and between stations on any part of a Railway;

Train.

"Train" means an engine with or without vehicles attached;

"Passenger train" means a train intended for the conveyance of passengers and other coaching traffic;

Passenger train.

"Goods train" means a train intended for the conveyance of general merchandize;

Goods train.

And includes—

(a) trains carrying livestock;
(b) trains carrying minerals;
(c) trains carrying materials;

"Mixed train" means a train intended to convey both passengers and goods;

Mixed train.

"Ordinary train" means a train, whether passenger, goods, or mixed which is entered in the working time-tables;

Ordinary train.

"Special train" means any train not classed as an "Ordinary train;"

Special train.

"System of working" means the system adopted for the time being on any portion of a Railway, as prescribed in Rule 3 and as detailed in Sections XIII to XIX;

System of working.

"Station" means any place—

Station.

(I) at which traffic is booked, and where authority is given for trains to proceed;

(II) at which authority is given for trains to proceed under the "System of working;"

"Station limits" include all traffic lines and premises within the distant signal or signals if such be provided:

Station limits.

Where no distant signal is provided, the "Station limits" extend to the outside points:

Where there are no points, and no distant signal the "Station limits" extend to the ends of the platform, or other positions fixed in each case;

"Authorized Officer" means the person who usually issues instructions of the nature referred to in each case;

Authorized Officer.

"Special instructions" means instructions given by the "authorized Officer;"

Special instructions.

"Station Master" means the person on duty responsible for the time being for working the trains and traffic within "Station limits;"

Station Master.

And includes—

(a) Assistant Station Master;
(b) Inspector;
(c) Clerk in charge;
(d) Any other person appointed to the charge of a Station;

"Ganger" means the man in charge of a gang of men employed on repairing the permanent way whatever he may be called on any particular Railway;

Ganger.

"Driver" means the person in charge for the time being of a working locomotive engine;

Driver.

"Station signal" means the signal which on some Railways is called "Main" or Home" or "Platform" signal;

Station signals.

"Guard" includes the under Guard, and any Brakesman or other person who may, for the time being, be performing the duties of the Guard;

Guard.

SECTION II.

General Management.

System of working.

3. Every Line of Railway upon which engine power is used, for the public conveyance of passengers or goods, must be worked on one of the following system, *viz.*,—

"Line clear and caution message,"	"Train Despatching,"
"Absolute block,"	"Pilot Guard,"
"Train following,"	"One Engine only,"
"Train Staff and Ticket,"	

in accordance with the rules laid down in Sections XIII to XIX for the system adopted.

Double and single line working.

4. On a double line trains must invariably be run on the left hand road, except under special instructions to the contrary and in accordance with rule 28.

On a single line no engine, with or without a train, shall be permitted to leave one station for another until it shall have been ascertained that the line between those stations is clear of engines and trains coming from the opposite direction, and of all impediments as far as can be known.

When allowable under the system adopted for working, trains may follow one another between stations in the same direction under special instructions on both single and double lines in accordance with rules 23 and 24.

Passage for Guard to carriages.

5. Except when necessary to carry passengers in goods vehicles, no passenger or mixed train shall be allowed to move from any station unless it be provided with an arrangement by which the Guard can communicate with, make his way, or otherwise get access to every passenger carriage in the train.

Engine not to push.
Same as Rules 183 and 246.

6. No engine shall be allowed to push a train, or portion of a train, or fuel truck, unless within station limits, or under special instructions.

Brake-vans, &c.

7. Except in the case of an engine running without vehicles, no train shall be despatched from any station without one or more brake-vans, and one or more Guards, and all the necessary lamps and other appliances.

Signal lights.
Same as Rules 104 and 162.

8. Whenever any train or engine is timed to run, or from any cause is expected to run, on any portion of the line later than sunset and before sunrise, the signal lamps must be lighted at sunset. During twilight in the mornings and evenings, both day and night signals must be used. The signal lights must not be put out until broad day-light except under instructions from an authorized officer.

In foggy or stormy weather when the day signals cannot be seen plainly, the signal lamps must be lighted, and kept burning, and at such times both the day and night signals must be used.

Engine not to run tender foremost.
Same as Rule 230.

9. No engine shall be driven tender, or fuel truck, foremost, except within station limits, without a written order, or unless in cases of unavoidable necessity to be established by the Driver.

Special trains.

10. No special train, or light engine, shall leave a station unless previous notice shall have been given, when practicable, to all stations concerned.

Time.

11. Madras time, or such time as is adopted on each Railway in India, shall be sent to the principal stations in accordance with authorized instructions.

Infectious diseases.
Same as Rules 143 and 202.

12. No person suffering from an infectious disease shall enter a Railway carriage or premises without previously notifying to the Station Master that he is so suffering, and obtaining from him permission to enter under special instructions.

13. Any one being in attendance on a person suffering from an infectious disease is subject to the same restrictions, while travelling by Railway, as if he himself were suffering from the disease.

Attendants.
Same as Rules 144 and 203.

14. The maximum number of passengers that may be carried in each compartment of every description of carriage must be fixed by the Railway Administration with the approval of Government, and such number must be distinctly exhibited, inside each first and second class compartment in the English language, and both inside and outside of each compartment of all classes inferior to the second class, in conspicuous places in English and in the vernacular language most commonly used in the districts through which the Railway passes.

Maximum number of passengers.

15. Tickets are only available from the date and for the period specified by the Railway Administration by which they are issued.

Period for which tickets are available.

16. Any person found smoking, or having an open light or fire, in good-sheds, store yards, or, who persists in smoking, after being warned by a Railway servant or Police Officer to desist, on any other portion of the Railway premises, where such practice may be deemed dangerous by the authorized officer, shall be liable to immediate removel from the Railway premises, and to a fine which may extend to fifty rupees, or, in default of payment of such fine, to simple imprisonment for a term which may extend to two months.

Smoking on Railway premises.
Same as Rule 141.

17. In the event of any person being drunk and disorderly, or causing annoyance to others, the Station Master is to use all reasonable means to stop the annoyance, and if the offender persists, the Station Master is to have him removed from the Railway premises, and the offender is liable to prosecution under the Railway Act.

Disorderly persons.
Same as Rule 140.

18. Every person desirous of travelling on a Railway shall, upon payment of his fare, be furnished with a ticket specifying in English and the principal vernacular language of the district in which the ticket is issued, the class of carriage for which and the place from and place to which, the fare has been paid, and the amount of such fare.

Tickets to be furnished.

And every passenger shall, when required, shew his ticket to any Railway servant duly authorized to examine the same, and shall deliver up such ticket upon demand to any Railway servant duly authorized to collect tickets.

Tickets to be shewn and given up.

19. At the intermediate stations, the fares shall be deemed to be accepted and the tickets furnished only upon condition that there be room in the train for which the tickets are furnished.

Tickets at intermediate stations.

In case there is no room for all the passengers to whom tickets have been furnished, those who have obtained tickets for the longest distance shall have the preference; and those who have obtained tickets for the same distance shall have the preference according to the order in which they have received their tickets.

Preferential right of ticket-holders.

20. Any passenger to whom a ticket has been furnished at any station and for whom there is no room shall, on returning the ticket within a reasonable time after its issue, be entitled to have his fare at once refunded.

Refund of fare.

21. No trespassing upon the Railway shall be allowed, and no person, other than a Railway servant, shall be permitted to walk on the line, unless provided with a license to do so, signed by an authorized officer of the Railway. If the trespasser, on being requested to quit, persists in remaining, he may be immediately removed from the Railway by any Railway servant or by any other person, and is liable to prosecution under the Railway Act.

Trespassing.
Same as Rule 50.

22. No carriage door shall be opened while the train is in motion.

Carriage doors.
Same as Rules 108 and 197.

23. Where the block system is not in operation, no train or engine shall be allowed to follow any other train or engine on the same line within ten minutes, unless it has been ascertained that the preceding train has arrived at the next station in advance.

Trains following.
Same as Rules 127 and 255.

24. Where the line is not worked under the block system, no passenger train shall follow a goods train, nor shall a fast goods train follow a stopping passenger train from a station within fifteen minutes, nor even then, until the engine driver has been properly warned of the time of the departure of the preceding train, and where it will next stop. But in case the distance to the next station in advance exceeds ten miles, the interval must be increased under special instruction of the authorized officer.

Trains following.
Same as Rules 128 and 256.

25. Fixed distant signals must be constructed to exhibit danger in case of any failure of their connections.

Distant signals to fly at danger.

26. Every portion of the permanent-way must be inspected daily on foot by some authorized person responsible for its condition; and bridges and all other works (including signals and signal wires) must be regularly inspected in accordance with rules laid down by the authorized officer.

Road to be inspected.
Same as Rule 290.

27. Special rules shall be laid down by the authorized officer for dealing with cases of fires in trains.

Fires in trains.

28. On the double line should an accident block one of the lines of Railway, so as to necessitate the passing of all up and down trains on a single line, immediate steps must be taken to establish single line working, on the rules adopted by each Railway for working in such cases.

When line is blocked.

29. Drivers with engines or trains must run within the limits of speed fixed for the section of the line upon which they are running.

Speed of trains.
Same as Rule 265.

These limits are not on any line to exceed, on the 5 feet 6 inch gauge, for passenger trains, sixty (60) miles an hour, and for goods and mixed trains thirty (30) miles an hour. On the metre gauge or other narrow gauge, these limits are not to be exceeded—for passenger trains, forty (40) miles an hour, and for goods and mixed trains, twenty (20) miles an hour.

30. Drivers with engines or trains must not make up between any two stations more time than is allowed to be made up in that distance by an authorized officer.

Making up time.
Same as Rule 266.

31. For the purpose of the Railway Act, the following are declared to be dangerous goods :—

Dangerous goods.

Carbolic Acid.	Aquafortis.	Coloured Fires.	Lathofracteur.
Fusel Oil.	Bromine.	Congreve Matches.	Lucifer Matches.
Kerosine Oil.	Chloride of Sulphur.	Crackers.	Nitrated gun-cotton.
Naphthalin.	Chloroform.	Combustibles.	Nitroglycerine and its compounds.
Paraffine.	Fluoric Acid.	Cotton powder.	Phosphorous.
Petroleum and other Hydrocarbon Oils.	Glacial Acetic Acid.	Cholorate mixture.	Percussion caps.
Rangoon Oil.	Mineral Acid, such as Muriatic Acid; Nitric Acid; Sulphuric Acid or Oil of Vitriol.	Detonators.	Schultze gun-powder.
Wood Naphtha.	Ammunition.	Dynamite.	Tubes for firing explosives.
Muriate of Tin.	Amorphous Phosperous.	Firework composition.	Vesuvians.
Nitrate of Iron.	Cartridges.	Fireworks.	War rockets.
Perchloride of Iron.		Fog signals.	Explosive chemicals.
Solution of Ammonia.		Fuze.	All other explosives.
Sulphate of Indigo, concentrated.		Gun-cotton.	
		Gun-powder.	
		Gun-cotton powder.	

32. Copies of the General Rules and Regulations must be supplied to Railway servants in accordance with rules 39 and 40.

Supply of Rules.

SECTION III.

RULES GENERALLY APPLICABLE TO RAILWAY SERVANTS.

Obedience to instructions.

33. Each person in Railway service must devote himself exclusively to the service of the Railway on which he is employed, residing at whatever place may be appointed, attending at such hours as may be required, paying prompt obedience to all persons placed in authority over him, and conforming to all the rules and regulations of the Railway.

Leaving service.

34. Any Railway servant who shall quit the service without having given one month's previous notice in writing, or the notice required by his agreement of service, shall forfeit all claim for pay due, and shall also be subject on conviction to the penalty prescribed in Rule 55.

Surrender of Railway property on leaving.

35. When any one leaves the service he must deliver up all Railway property in his charge; and no money due for wages will be paid until all articles, which have been supplied to him, shall have been delivered up in accordance with existing regulations. If not delivered up, or if any article be missing, or be damaged from neglect or by improper use, the cost of such article, or of the repair of such damage shall be deducted from any pay due to him or from any moneys held for him by the Railway authorities, and if such moneys should be insufficient to meet the claim, the balance will become a debt recoverable at law.

Misconduct, &c.

36. All Railway servants are subject to immediate dismissal, or suspension without pay, for refusal of duty, disobedience of orders, negligence, misconduct, absence without leave, or for any neglect of these regulations; and may be held liable for all damages occasioned by misconduct or negligence; and are also subject on conviction to the penalty prescribed in Rule 55.

Pay.

37. The pay of every servant always includes his services during all hours, whether early or late, as may be determined from time to time by his superior.

Intoxication.

38. Intoxication on duty renders the offender liable to dismissal; and also to criminal prosecution under the Railway Act.

Supply of Books of rules.

39. A copy of these rules and regulations shall be supplied to each Railway servant who understands English, and who is in any way connected with the out-door working of the Railway, or with the working of trains.

Rules in the Vernacular.

Each Native subordinate who is in any way connected with the out-door working of the Railway or with the working of trains, and who may be unacquainted with the English language, shall be provided with a translation, in such language as he understands, of those rules, or of the section relating to his duties.

Servants to be acquainted with rules and keep copies.

40. Every servant must make himself acquainted with the rules or sections of the rules supplied to him, and must produce his copy when required. If the copy be lost, defaced or torn, he must apply to his immediate superior for a new one which will be supplied at the cost of the servant. Any Railway servant who should have a copy and is found without one is liable to punishment.

Station Masters, Foremen, &c., responsible that their subordinates are acquainted with rules.

Station Masters, Foremen, and Gangers or Mestris of Platelayers, are responsible that the subordinates working under them are acquainted with all the rules relating to their respective duties.

All persons must assist in carrying out rules.

41. Every servant is required to assist in carrying out the rules and regulations, and must immediately report to his superior any infringement thereof, or any occurrence affecting the safe and proper working of the Railway which may come under his notice.

Public safety.

42. The safety of the public must, under all circumstances, be the chief care of Railway servants.

43. No servant may, under any circumstances, absent himself from duty without proper permission.
Absence from duty.

44. Every person required to wear uniform is to appear in it, clean and neat when on duty.
Uniform.

45. The conduct of all servants must be prompt, civil and obliging. They must at all times afford every proper facility for the business to be performed, and be careful to give correct information.
Conduct of servants.

46. Swearing and immoral language, and violent altercations and threats, are strictly prohibited.
Improper language.

47. No Railway servant is allowed to travel on the railway unless provided with a proper ticket or free pass; nor is he allowed to ride on the engine, or in the brake-van, or in any vehicle in which luggage or parcels are conveyed, unless in the execution of his duty, without written permission from an authorized Officer.
Ticket or pass necessary.

48. No money or gratuity, in the shape of fee, or reward, is allowed to be taken from passengers, or other persons, by any Railway servant, even although the regular hours of duty shall have expired, without the permission of the Railway Administration. Any infringement of this rule renders the offender liable to immediate dismissal and on conviction to imprisonment for three years or to fine, or to both under Sections 161 to 165 of the Indian Penal Code.
Gratuities.

49. Drivers, Guards, and others directly connected with the working of trains, shall not, when on duty, be supplied with spirituous liquors at refreshment-rooms, except under rules framed by an authorized Officer.
Spirituous liquors.

50. No trespassing upon the Railway shall be allowed, and no person other than a Railway servant shall be permitted to walk on the line unless provided with a license to do so, signed by an authorized Officer of the Railway. If the trespasser, on being requested to quit, persists in remaining, he may be immediately removed from the Railway by any Railway servant or by any other person, and is liable to prosecution under the Railway Act.
Trespassing. Same as Rule 21.

51. In the case of accident or obstruction the safety of passengers must be deemed of the first importance. The most prompt mode of communicating the circumstances to the next station, and to head-quarters, must be adopted, and all possible assistance may be demanded from, and must be promptly rendered by, any Railway servant whose services may be needed.
Accident.

52. Any lost article found on the Railway line and premises must be immediately made over to the nearest Station Master to be dealt with in accordance with special instructions. See Rule 139.
Lost Articles.

53. The staff along the line must always be prepared for special trains without previous notice.
Special trains without notice.

54. Drivers, Guards, and others must invariably report to the nearest Station Master any defective signals, or obstruction of them, or neglect in working them.
Defective signals to be reported.
Same as Rule 80.

55. Any person committing a breach of Rules 34, 36, 43, 46, and 47 shall be liable to a fine which may extend to fifty rupees, or, in default of payment of such fine, to simple imprisonment for a term which may extend to two months.
Breach of Rules.

SECTION IV.

SIGNALS.

56. RED is a signal of "DANGER"—Stop.

Colours.

GREEN is a signal of "CAUTION"—Go slowly.

WHITE is a signal of "ALL RIGHT"—Go on.

Hand Signals.

57. The hand signals shall be made by flags in the day and by lights at night or in foggy weather or in tunnels.

Hand Signals.

58. When the line is clear the Signalman must either stand erect with his flag in his hand, thus—

or display a white flag, or white light.

ALL CLEAR.

59. If it be necessary to proceed with "Caution," the green flag will be elevated thus—

or the green light shewn.

CAUTION.

60. If it be necessary to proceed with "Caution" from any defect in the road or rails, the green flag will be depressed thus—

or the green light shewn.

CAUTION. (RAILS.)

61. If it be necessary to stop, the red flag will be shewn and waved to and fro, the Signalman facing the engine thus—

or the red light shewn.

DANGER.

62. In the absence of flags—

Both arms raised above the head denotes "Danger," thus—

DANGER.

One arm raised with the hand above the head denotes "Caution," thus—

CAUTION.

One arm held in a horizontal position across the line of rails denotes "All Right," thus—

ALL RIGHT.

63. In the absence of a green light, a white light waved slowly from side to side denotes "Caution"—Go slowly.

Caution with white light.

64. In the absence of a red light, any light moved up and down or waved violently denotes "Danger"—Stop.

Danger signal with any light.

Fixed Signals.

65. The fixed signals are, for the most part, constructed with one or more Semaphore arms for day signals, and with one or more lamps for night; but disc and other signals are in some cases used.

Fixed signals.

The day signal is invariably made by the arm on the left hand side of the post as seen by the Driver of an approaching engine.

Semaphores on the left-hand side.

66. The "Danger Signal" is shewn in the day time by the arm on the left hand side of the post being raised to the horizontal position, thus—

and by the exhibition of a *red* light by night.

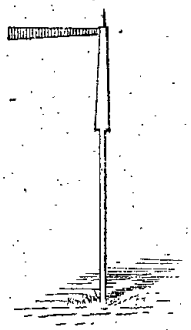

DANGER.

67. The "Caution Signal" is shewn in the day time by the arm on the left hand side of the post being placed halfway to the horizontal position, thus—

and by the exhibition of a *green* light by night.

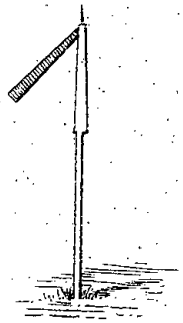

CAUTION.

68. The "All Right Signal" is shewn in the day time by the arm on the left hand side being lowered to the post, thus—

and by the exhibition of a *white* light by night.

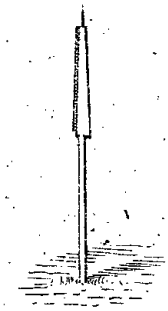

ALL RIGHT.

69. Except at level-crossings worked under Rule 336, fixed signals are always to be kept at "Danger," and lowered or reversed only to allow a train or engine to pass.

Signals to be kept at "Danger."

Station Signals.

(*Also called "Main," or "Home," or "Platform" Signals.*)

70. Station signals are placed at stations, junctions, sidings outside station limits, and signal boxes, and when at "Danger," no train or engine must pass them, or foul the crossings or points to which they apply, except as prescribed in Rules 72 and 77.

Station Signals.
Same as Rule 231.

71. Station signals at junctions must never be passed when at "Danger" by the train to which the signal applies.

Junction signals.
Same as Rules 158 and 232.

72. Station signals at stations, sidings, and signal boxes (other than at junctions) must never be passed when at "Danger" unless the Driver is signalled past by hand by a person duly appointed by an authorized Officer.

Passing Station signal.
Same as Rules 159 and 233.

73. Station signals must invariably stand at "Danger" except when lowered for an approaching train.

Station signals at "Danger."

Distant Signals.

Distant signals.

74. Distant signals are fixed at a considerable distance from the station, and are constructed to exhibit the "Danger" and "All Right" signals only, or "Danger" and "Caution" signals only.

Use of distant signals.

75. Distant signals must be replaced at "Danger" immediately they are passed by an engine.

Observance of distant signals. Same as Rule 234.

76. When a distant signal is at "Danger," the Driver of an approaching train must bring his train to a *dead stop* outside of it, and must then ascertain if the line is clear to admit the train within it. If the line be clear, he must at once draw the train cautiously within the distant signal so as to be protected by it, and then stop until signalled into the station in accordance with rules prescribed by the authorized Officer. If, however, there is any obstruction on the line so near to the distant signal as to prevent the whole of the train from passing safely within it, the rules for the protection of trains when stopped outside station limits must be immediately carried out—See Rules 179 and 240.

Signals apply to proper direction. Same as Rule 235.

77. Station and distant signals apply only to trains or engines running in the proper direction, and must not be used for any other purpose. Trains or engines shunting from one main line to another, or shunting into, or out of, sidings connected with the main line, must, unless special signals are provided for the purpose of signalling such operations, be signalled past the station signal, either verbally, or by handlamp, or flag, as occasion may require; it being necessary, in such cases, that the Danger signal should be exhibited at the station signal as well as at the distant signal, for the protection of the train or engine so employed.

Defective signals.

78. Every Station Master, or other person, must, in the event of any signal under his charge becoming defective, immediately report the case to his immediate superior, and to the nearest Permanent Way Inspector; and the Station Master shall place a competent man or men with the necessary hand signals and detonators to signal in lieu of such defective signal, until it is again in proper working order.

When the Station Master cannot provide proper men from his own staff, he must apply to the nearest Permanent Way Inspector for competent men.

Absence of signals. Same as Rules 190 and 238.

79. Except at places specially exempted upon each railway, the absence of a signal at a place where a signal is ordinarily shewn, or a signal imperfectly exhibited, must be considered a danger signal, and treated accordingly, and the fact reported to the Station Master.

Defective signals to be reported. Same as Rule 54.

80. Drivers, Guards, and others must invariably report to the nearest Station Master any defective signals, or obstruction of them, or neglect in working them.

Detonating Signals.

Supply of detonators.

81. Every Guard, Driver, Foreman of works, and Ganger or Mestri of Platelayers will be provided with detonators of fog signals which they are always to have ready for use whilst on duty; and every person in charge of a station must keep a supply of these signals in a suitable place, easy of access.

Use of detonators.

82 In thick, foggy, or tempestuous weather, and in cases of obstruction, detonators must be used in addition to the regular day and night signals, in accordance with Rules 86, 87, 88 and 179.

Testing detonators.

83. Detonators must be carefully handled, as they are liable to explode if roughly treated. It is necessary to keep them well protected from damp. At least one from each person's stock must be tested, at intervals of not more than one month, to ensure that they are in good condition. Station Masters in charge of stations, where extra supplies are kept for Guards and others, shall test at least one from each box before issue.

84. Detonators must be placed on the rail (label or brand upwards) and secured by bending the clasp round the upper flange of the rail. A detonator explodes with a loud report, when an engine passes over it and the Driver must stop as quickly as possible, and then proceed cautiously to the place of obstruction, or until he receives an "All Right" signal.

Placing.

Train Signals.

85. On both double and single line between sunset and sunrise and during foggy weather, every train must exhibit a Red Tail Light and two Red Side Lights in rear of the train; and every engine running alone must exhibit at least one Red Tail Light; in both cases Head Lights prescribed by the authorized Officer must be exhibited.

Engine and train lights. Same as Rule 248.

In the case of two or more engines running coupled together without a train, the first engine only must exhibit the prescribed Head Lights, and the last engine only must exhibit at least one Red Tail Light.

This rule does not apply to engines and trains doing station work.

SECTION V.

Signalling in foggy or tempestuous weather, or during dust-storms.

86. In foggy or tempestuous weather two detonators 10 yards apart must be placed on the rail by the signalman or other trained servant selected by the Station Master at least one hundred yards outside the distant signal post, or, in the absence of a distant signal, at least seven hundred yards from the outside points. Drivers and Guards must report all cases of omission to do this.

Detonators.

87. On the double line, detonators must be renewed immediately after a train has passed over them; and on the single line they must be placed before an approaching train is due or expected.

Renewal.

88. The Station Master must see that fresh supplies of signals are sent to the men in place of those exploded; and in case it is necessary to keep a man out for any length of time, he must be relieved every six hours, and visited as often as practicable to ensure that he is on the alert.

Supplies and relief of men.

89. In foggy weather or in dust-storms, when the day signals cannot be seen plainly, the signal lamps must be lighted and kept burning.

Lamps to be lighted.

SECTION VI.

Station Masters and Clerks in charge of Stations.

90. Every Station Master, or person in charge of a station, is answerable for the security and protection of the office and buildings, and of the Railway property there. He is responsible for the faithful and efficient discharge of the duties devolving upon all the Railway servants, either permanently or temporarily employed at the station, or within its limits, and all such servants are subject to his authority and directions in the working of the line and station. He is also responsible for the general working of the station being carried out in strict accordance with all rules, regulations, and orders.

Responsibility of officers in charge of Stations.

91. Station Masters will receive their orders from, and report to, such Traffic Officer as may be placed over them.

Station Masters under Traffic Department.

92. It is the special duty of every Station Master, or such other person as may be appointed for the purpose by an officer of the Traffic Department, to attend to the arrival and departure of trains.

Arrival and departure of Trains.

93. The Station Master must always appear in uniform when on duty, if required.

Uniform.

94. The Station Master, or such other person as may be appointed for the purpose, must daily inspect the station, and see that all rooms, latrines, and other offices, and platforms, &c., are kept neat and clean.

Daily inspection of stations.

95. The Station Master must see that all orders and instructions are duly entered and executed, and that all books are regularly and neatly kept, and all returns properly prepared and submitted.

Office duties.

96. The Station Master must take care that all the servants at his station behave respectfully and civilly to the public and passengers of every class.

Civility to public.

97. The Station Master must take care that all the servants at his station come on duty at proper times in a clean and tidy state, and in uniform when so required.

Servants coming on duty.

98. Every exertion must be made for the expeditious despatch of the station duties, and for ensuring the safety of the public and punctuality of the trains. But no train conveying passengers must be started before the advertized time.

Despatch of trains, &c.

99. The Station Master must report, without delay, to his superior officer, neglect of duty or other misconduct on the part of any of the Railway servants within station limits, and must also forward to his superior officer particulars of any complaint made by the public.

Misconduct to be reported.

100. The Station Master must see that the proper time-bills and notices are exhibited and renewed when necessary, and that they are removed when out of date.

Notices at stations.

101. The Station Master must not be absent without leave from his immediate superior; and in cases of illness he must inform his superior officer and take care that some competent person is entrusted with his duties.

Absence.

102. The Station Master must be careful that all stores supplied for the station are prudently and economically used, and that there is no waste of oil, stationery, &c.

Stores.

103. The greatest care must be exercised in the cleaning, trimming, and lighting of signal lamps, and Station Masters will be held responsible that this work is efficiently performed. The signal lamps must be lighted and extinguished in accordance with Rule No. 104.

Trimming signal lamps.

104. Whenever any train or engine is timed to run, or from any cause is expected to run, on any portion of a line later than sunset and before sunrise, the signal lamps must be lighted at sunset. During twilight in the mornings and evenings, both day and night signals must be used. The signal lights must not be put out until broad day light, except under instructions from an authorized Officer.

Lighting lamps.
Same as Rules 8 and 162.

In foggy or stormy weather, when the day signals cannot be seen plainly, the signal lamps must be lighted, and kept burning, and at such times both day and night signals must be used.

105. The Station Master on duty must look at the head and tail lamps of every passing train, and, if necessary and possible, must see that they are re-trimmed. But if the train does not stop at the station, and any of the lamps require trimming, he must immediately telegraph to the station in advance to stop the train and re-trim the lamps.

Lamps of passing trains.

106. At stations where roof lamps are supplied to trains, Station Masters are responsible that the lamps are properly cleaned and trimmed, and that no smoky, defective, or badly burning lamp is placed in the train.

Roof lamps.

107. The Station Master is responsible that, immediately on the stopping of each passenger train, the name of the station is called out along the train in a distinct and audible manner, and that the station servants pay immediate attention to any indication shewn by the passengers of their desire to alight.

Name of station to be called out.

108. No carriage door shall be opened while the train is in motion.

Carriage doors.
Same as Rules 22 and 197.

Trains overrunning or stopping short.
Same as Rules 193 and 254.

109. When a passenger or mixed train has come to a stand at a station—whether alongside, beyond, or short of the platform—the Driver must not move it for any purpose whatever except upon instructions from the Guard, under orders of the person in charge of the Station. The signal for the train to again move must not be given by the Guard until he has satisfied himself that no passenger is getting into, or out of, the train, and that all the carriage doors are closed. Before moving his train the Driver must sound his whistle sharply and distinctly.

Load of trains.

110. The Station Master must leave it to the discretion of the Driver to determine what load the engine can take, but every instance of refusal to take the regulation load must be reported to the Traffic Officer.

Securing stock in sidings.

111. The Station Master is responsible that vehicles standing at the station or sidings are properly secured in accordance with rules prescribed by the authorized officer, and scotch blocks, where provided, fastened.

Safety points.

112. The Station Master is responsible that all safety points and catch sidings, when it is not necessary that they should be opened, are closed against the line which they are intended to protect.

Facing points.
Same as Rule 151.

113. Facing points must in all cases be securely fastened or held for the passage of trains or vehicles.

Unfit vehicles.

114. No vehicle which is pronounced unfit by the Carriage and Wagon Examiner shall be run on a train; and no vehicle which has been off the road shall be allowed to run on the line between stations until it has been examined and passed by a competent Examiner, except in the case of derailment outside station limits, when, if the Driver considers it safe, the vehicle may be taken slowly to the next station.

Load of vehicles.

115. No vehicle shall be loaded beyond its marked carrying capacity.

Protection of lines obstructed.

116. Before the commencement of any loading or other operation by which any line of rails, in use for traffic purposes, may be fouled or obstructed, the person in charge of such operation must obtain the permission of the Station Master, who must see that all necessary steps are taken for the protection of traffic during such obstructions.

Loading vehicles.

117. Carriages, machinery, timber, and other large articles in open trucks must be loaded within the authorized loading dimensions.

Dummy wagon.
Same as Rule 212.

118. When the jib of a crane or a load projects beyond its truck, whether standing in a yard or on a running train, it must be protected by a dummy, which dummy may be loaded.

Shunting.

119. Station Masters must see that the shunting of trains, or crossing from one line to another, is performed only at such times and in such manner as will not incur danger.

Shunting operations to be protected.
Same as Rule 184.

120. No engine or vehicle must be shunted or moved so as to obstruct the main line until the proper signals have been exhibited, in one or both directions as may be necessary; and care must be taken when the main line is about to be obstructed, after a distant signal has been placed at "Danger" for the purpose of protecting it, that sufficient time is allowed to elapse for any approaching engine or train (which may have been near to or within such signal before it was so placed at "Danger") to pass before the obstruction takes place.

Vehicles escaping.

121. Should any vehicle or portion of a train escape from a station, immediate steps must be taken to warn the other station concerned, and prevent accident as far as practicable.

Shunting on inclines.

122. When vehicles are shunted at places situated on steep gradients, proper precautions must be taken to prevent any vehicle from running down the incline ; a sufficient number of brakes must be put on, and sprags or hand-scotches used, when necessary, to prevent the possibility of any vehicle running away. At such places a supply of scotches must be kept for the purpose. See Rule 210.

Fly shunting.
Same as Rules 188 and 258.

123. Fly shunting of vehicles against loaded passenger trains, or of vehicles containing passengers or live stock, is strictly prohibited.

Points and signals.

124. The Station Master is responsible that all points, gates, and signals at his station are in proper working order. He must report the particulars of any defects to the nearest Permanent Way Inspector, and must advise his immediate superior.

Vehicles to be searched and windows to be closed.

125. All vehicles shunted off at stations as empties must be carefully searched. The windows and lamp holes of all empty compartments must be closed when the carriages are standing or the sidings at the stations. See Rule 200.

Starting of Trains.

126. Before a train starts, care must be taken that all carriage doors are fastened. The signal to the Driver to start must be given by the Guard, upon receiving intimation from the person in charge of the station, that all is right for the train to proceed. But no train shall be started until the rules of the system of working have been complied with. See Rule 171.

Interval between trains.
Same as Rules 23 and 255.

127. Where the block system is not in operation, no train or engine shall be allowed to follow any other train or engine on the same line within ten minutes, unless it has been ascertained that the preceding train has arrived at the next station in advance.

Trains following each other.
Same as Rules 24 and 256.

128. Where the line is not worked under the block system, no passenger train shall follow a goods train, nor shall a fast goods train follow a stopping passenger train, from a station within fifteen minutes, nor even then, until the Driver has been properly warned of the time of the departure of the preceding train, and where it will next stop. But in case the distance to the next station in advance exceeds ten miles, the interval must be increased under special instructions of the authorized Officer.

Trains not to stop where not timed.

129. No passenger train shall be stopped at station where it is not timed to call, for the purpose of taking up or setting down passengers, without special authority.

Examination of trains.

130. At stations where Carriage Examiners are kept, the Station Master, before starting the train, must satisfy himself that the examination of it has been completed, and that the train is all right and fit to proceed. Where Examiners are not kept, steps must be taken to remedy any defects that may be observed in the running of vehicles by supplying oil or grease to the axle-boxes where required, or removing the defective vehicle from the train when necessary.

Accidents.

131. In case of obstruction or accident, the Station Master must obtain all necessary assistance as soon as possible, and report the occurrence by telegraph, or by the most expeditious means, to the next station on the other side of the accident, so that notice may be given to the Drivers and Guards of approaching trains. See Rule 186.

Accidents to be reported.

132. The Station Master nearest to the place at which any accident attended with loss of human life or serious injury to person or property or any accident of a description usually attended with such loss or injury, occurs, must, without unnecessary delay, give notice in writing or by telegraph of such accident to the nearest Magistrate and to the officer in charge of the Police Station in the jurisdiction of which the accident occurs, or to such other Magistrate or Police Officer as the Local Government from time to time appoints in this behalf.

The Station Master must also report to officers of the Railway all accidents in accordance with special instructions.

133. In case a train may have to stop between stations, to take up or put down material, the permission of the Station Master of the last station, before the stoppage has to be made, must be obtained, before the train leaves such station. The Station Master must take care to give all necessary instructions.

Trains working between stations.
Same as Rules 201, 279 and 315.

134. No person shall be allowed, without proper authority, to enter any carriage for the purpose of travelling therein unless the fare has been paid and a ticket obtained. See Rule 199.

No person to travel without ticket.

135. If any passenger shall refuse, or be unable, to produce a proper ticket, or shall commit any other offence, the case must be immediately investigated by the Station Master, and he is to exercise his discretion as to the proceedings to be taken, always reporting to his immediate superior.

Passenger committing offence.

136. The power of arrest and detention is to be exercised with the greatest caution, and never where the address is given, and there is no good and sufficient reason to doubt its correctness; or adequate security is offered for appearance to answer a charge. When it shall be necessary to detain any person, such detention shall not continue for a longer period than is absolutely necessary; but such person must be conveyed before a Magistrate with as little delay as possible.

Detention of offenders.

137. As it is the intention which constitutes the offence, caution and discretion must be used in treating different cases as it frequently occurs that passengers travel unintentionally, beyond the distance for which they have paid their fares. In such cases they may be allowed to return to the station for which they booked on payment of the ordinary single fare for the distance overridden, provided they return by the next train, and do not, in the interval, leave the railway premises.

Discretion to be used.

138. Passengers not producing their tickets are required to pay the fare from whence the train started, until enquiry can be made in order to ascertain whether the fare had been previously paid, or not; in every case the circumstance must be enquired into without delay and reported. See Rule 199.

Passengers without tickets.

139. An account of all unclaimed luggage, and any lost property found on the line and on the Railway premises must be kept by the Station Master, and all such must be dealt with in accordance with special instructions. See Rule 52.

Lost property.

140. In the event of any person being drunk and disorderly, or causing annoyance to others the Station Master is to use all reasonable means to stop the annoyance and if the offender persists, the Station Master is to have him removed from the Railway premises, and the offender is liable to prosecution under the Railway Act.

Disorderly persons.
Same as Rule 17.

141. Any person found smoking or having an open light or fire in goods-sheds or store yards, or who persists in smoking after being warned by a Railway servant or Police Officer to desist on any other portion of the Railway premises where such practice may be deemed dangerous by the authorized Officer, shall be liable to immediate removal from the Railway premises, and to a fine which may extend to fifty rupees or, in default of payment of such fine, to simple imprisonment for a term which may extend to two months.

Smoking on Railway premises.
Same as Rule 16.

142. No unprotected light shall be allowed in any Railway vehicles.

Lights in vehicles.

143. No person suffering from an infectious disease shall enter a Railway carriage or premises without previously notifying to the Station Master that he is so suffering and obtaining from him permission to enter under special instructions.

Infectious diseases.
Same as Rules 13 and 202.

144. Any one being in attendance on a person suffering from an infectious disease is subject to the same restrictions while travelling by Railway as if he himself were suffering from the disease.

Attendants.
Same as Rules 13 and 203.

145. No person suffering from an infectious disease is to be allowed to travel in the same compartment with other passengers, but must take and pay for reserved accommodation; and special precaution is to be taken against the infection being communicated to other persons on the Railway premises.

Reserved compartment for infectious diseases.
Same as Rule 204.

146. Any person found suffering from an infectious disease in a Railway carriage or in any place on a Railway where there is likelihood of the infection spreading, and who has not obtained the permission of the Station Master under Rule 12, is to be removed from the Railway premises, and shall, on conviction under section 268 of the Indian Penal Code, be liable to imprisonment for six months, or to fine, or to both, or on conviction under section 270 of the Indian Penal Code be liable to imprisonment for two years, or to fine, or to both.

Power to remove persons suffering from infectious disease.
Same as Rule 205.

147. If any Railway carriage has been entered by a person suffering from an infectious disease, such carriage must be disinfected immediately after it has arrived at its destination, and no passenger shall be allowed into it until the disinfection has been completed.

Disinfection of carriages.
Same as Rule 206.

148. Prisoners and persons afflicted with insanity must not be allowed to mix with other passengers, but must be placed, with their escort, in a prison-van or separate compartment, upon reserved accommodation being paid for.

Prisoners.
Same as Rule 207.

149. No engine, or other vehicle, the property of a private owner, shall be allowed to enter upon the main line, except under special arrangement.

Private vehicle.

SECTION VII.

POINTSMEN AND SIGNALMEN.

150. Pointsmen must be careful to keep their points clear, and whenever a train or engine has passed, they must remove anything that may have got within the points so as to prevent them from closing.

Care of points.

151. Facing points must, in all cases, be securely fastened or held for the passage of trains or vehicles.

Facing points.
Same as Rule 113.

152. Points must not under any circumstances be fastened in any other than the manner prescribed by an authorized officer.

Points.

153. Whenever points, crossings, or guide rails are injured, or damaged, the Pointsman must immediately report the circumstance to his superior officer, and, if possible, to the nearest Permanent Way Inspector.

Injured points to be reported.

154. Signalmen and Pointsmen must not leave the signals or points of which they have charge during their period of duty.

Regular attendance when on duty.

155. Men in charge of signals must pay particular attention to the rules for working signals.

Attention to signal rules.

156. All signals must be kept ready for immediate use. Every man who has charge of, or uses, signals must bring any defect to the notice of his superior.

Signals ready for use, &c.

157. Signalmen and pointsmen must have with them, when on duty, flags and hand signal lamps which must be lighted when necessary.

Hand signals.

158. Station signals at junctions must never be passed when at "Danger" by the train to which the signal applies.

Junction station signals.
Same as Rules 71 and 232.

159. Station signals at stations, sidings, and signal-boxes (other than at junctions) must never be passed when at "Danger" unless the Driver is signalled past by hand by a person duly appointed by an authorized officer.

Station signals other than at junctions. Same as Rules 72 and 233.

160. No line shall be obstructed or occupied by shunting or otherwise, until the signals applicable to it have been placed at "Danger."

Obstruction of line.

161. Should any impediment or obstruction exist upon the line within the sight or knowledge of the Pointsman or Signalman, he must exhibit the "Danger" signals and must not allow any train or engine to pass in that direction, until such impediment or obstruction has been removed, and the line made clear and safe; and he must, as soon as practicable, take steps to report the obstruction to his superior officer.

Signals in case of obstructoin.

162. Whenever any train or engine is timed to run, or from any cause is expected to run, on any portion of a line later than sunset and before sunrise, the signal lamps must be used lighted at sunset. During twilight in the mornings and evenings, both the day and night signals must be used. The signal lights must not be put out until broad daylight, except under instructions from an authorized officer.

Signal lamps to be lighted at sunset. Same as Rules 8 and 140.

In foggy weather, when the day signals cannot be seen plainly, the signal lamps must be lighted, and kept burning and at such times both the day and night signals must be used.

Foggy weather.

163. If a Signalman or Pointsman observe anything wrong or unusual in a passing train, he must report the circumstance to his superior; but if it is of such a nature as to involve danger to the train or the public, he must at once take all practicable steps to stop the train.

Passing trains to be observed.

SECTION VIII.

GUARDS.

164. Every Guard must be at the station from which he is to start at the time appointed for his attendance, and must have with him a copy of these regulations and of the working time-tables of the lines over which he has to run.

Attendance at station.

165. Every Guard must have with him the equipment and stores prescribed by the authorized officer.

Equipment.

166. Guards will receive instructions from the Station Master, or other authorized officer to whom they must apply for anything necessary for the working of their trains.

To receive instructions from Station Master.

167. Guards are responsible that their brakes and lamps are in good working order, and that the lamps are trimmed and lighted and brightly burning between sunset and sunrise, and during a fog; also that the vehicles of the train are in good order, and properly coupled up, and that the cord or other appliance for communication between Guard and Driver, if provided, is in order and properly arranged throughout.

Inspection of train.

168. The train when in motion is under the control of the Guard when there is only one, and of the Head Guard when there are more than one. The passengers and property in the train are under his charge; he is responsible for the safety and regularity of the whole; he must regulate his time-piece in accordance with authorized rules.

Train under control of Guard.

169. When there are two or more Guards or Brakesmen with a train, they must obey the instructions of the Head Guard.

Head Guard to be obeyed.

170. Each Guard must ride in his proper van, and not on the Engine, nor in a carriage or wagon, except under special circumstances.

Guards travel in their vans.

171. The signal for starting a train must be given to the Driver by the Guard upon receiving the necessary authority in accordance with the system adopted for working the Railway. See Rule 126.

To start trains.

172. After each train has left the platform, and before it reaches the distant signal, the Guard and the Driver must exchange signals with each other. This exchange of signals must also be made whenever a train runs through a station without stopping. The Driver must stop if the proper signals are not exchanged.

Exchange Signals.

173. Every Guard when travelling must keep a good look-out, and should he see any reason to apprehend danger, he must use his best endeavours to attract the attention of the Driver and give notice to him of the apprehended danger.

To keep a good look-out.

174. In the absence of special rules to the contrary, when the Driver gives three or more short sharp whistles, or sounds the brake whistle (when a special whistle is supplied for that purpose), or applies the communication, where such exists, the Guard or Guards must immediately apply the brakes.

Driver's signal to Guard.

175. In travelling down steep inclines, Guards must, in order to steady the train, assist the Driver with their brakes if required.

Rear-brake on steep inclines.

176. The Guards must not allow any person to ride outside the carriages, nor must they permit any unauthorized person to ride in any compartment or vehicle not intended for the conveyance of passengers, except under special arrangements.

Passengers not to ride out ide.

177. Guards must see that the doors of the carriages are properly closed.

Carriage door to be closed.

178. Guards must exert themselves to prevent any breach of the regulations by passengers or others, and report any such breach that comes to their notice.

Guards to prevent breach of rules.

179. Except as provided in Rule 180, when a train has been stopped, from any cause, outside station limits on the double line, the Head Guard must go, or see that a competent person be sent back, shewing danger hand signals, having with him detonators (to be used by day as well as by night) to stop any train approaching on the same line of rails.

Train stopping outside station limits. Same as Rule 240.

The person going to protect the train must place upon the rails, on which the train has been running, two detonators ten yards apart, at a distance of three quarters of a mile on a gradient of one in two hundred and fifty or steeper, falling in the direction of the train, or half a mile on any flatter gradient, or on the level, and he must also, on his way out, place one detonator at half those distances respectively. He must remain exhibiting his hand danger signal at the further distance until recalled by engine whistle, or otherwise, when he must leave down the two most distant detonators, taking up the other on his way back.

On a double line, should both roads be fouled, detonators and hand signals must be used on each line in the manner prescribed, and all trains approaching from either direction must be stopped.

In the case of a single line the train must be protected, in the same manner, in front as well as in rear.

If one, or more, trains approach the obstruction, the train which last arrives must be protected in the rear in the manner prescribed, and when the other train or trains are thus protected in that direction, the person, or persons who protected such other trains, can return, and the intermediate detonators may be removed.

When the mixed gauge is laid, detonators must be placed on each rail, both for the broad and the narrow gauge trains.

On the single line the rear of a train must be protected first, and in cases, on the double line when both roads are obstructed and men are not available to be sent out in both directions at the same time, the Guard must use his discretion as to which road should be first protected.

When necessary a Fireman must be sent out with the signals for the protection of the train.

Should the stoppage occur to an engine not attached to a train, the Driver must take the prescribed precautions for its protection.

On the double road, should both lines be fouled, the Driver must aid the Guard, and at once display a "Danger signal" to the front, and, if the engine is not disabled, it should be used to convey the person who goes forward to the proper distance.

When starting a train which has stopped outside station limits, the Guards and Drivers must exchange signals. Unless these signals are exchanged the Driver must stop.

Ballast Train, &c.
Same as Rule 241.

180. Ballast or other trains, the working of which requires that they must stop outside station limits, may be protected by special regulations; but unless so especially provided for in each case, they must be protected as prescribed in Rule 179.

Driver not aware of accident.

181. Should an accident to a train cause an obstruction and the Driver run forward without being aware of it, the Guard must take steps in accordance with Rule 179 to protect either or both lines as may be necessary.

Portion of train left on Main Line.
Same as Rule 243.

182. When a portion of a train is left on the line outside station limits from accident or inability of the engine to take the whole forward, the Guard must put down the brakes and carefully secure the rear portion, so that it will remain stationary, and it must be protected in the manner prescribed in Rule 179. The Driver must not return for the second portion on the same line except upon written instructions from the Guard, and if, upon the double road, no such written instructions are given, the engine must return upon the proper line under the rules of the system adopted for working, and cross at the nearest points to the rear of the part left, which he must work to a station or siding where he can again shunt to the front of the train. If it is necessary for the engine to return to the rear portion of the train on the same line, the Driver must, before starting with the front portion, obtain from the Guard the necessary written instructions authorizing him to do so, and the Guard must in such cases continue to protect his train in the rear, and must not permit a following train to move it.

When there are two Guards with a train so divided, the second Guard, or, if there is only one Guard, the Fireman, must if practicable, and safe to do so, ride upon the last vehicle of the front portion until it is placed in a siding.

Engine not to push train.
Same as Rules 6 and 246.

183. No engine shall be allowed to push a train or portion of a train, or fuel truck, unless within station limits, or under special instructions.

Shunting operations to be protected.
Same as Rule 120.

184. No engine or vehicle must be shunted or moved so as to obstruct the main line, until the proper signals have been exhibited in one on both directions, as may be necessary; and care must be taken when the main line is about to be obstructed after a Distant Signal has been placed at "Danger" for the purpose of protecting it, that sufficient time is allowed to elapse for any approaching engine or train (which may have been near to or within such signal before it was so placed at "Danger") to pass before the obstruction takes place.

Train parting.
Same as Rule 242.

185. Should any part of a train become detached when in motion, care must be taken not to stop the front part before the rear portion has been stopped, and the rear Guard must promptly apply his brake to prevent a collision with the front portion.

To report accident.

186. In the case of accident or obstruction to trains the Guard must take steps to report in the quickest possible manner to the nearest Station Master, and if the telegraph be injured, or if there be no telegraph, the report must be sent to the Stations on both sides. See Rule 131.

Lamps of shunted trains.

187. When a train is shunted for another train to pass, the Side Lamps must be reversed, or so disposed of as not to exhibit the Red Light to a following train.

Fly shunting.
Same as Rules 123 and 258.

188. Fly shunting of vehicles against loaded passenger trains, or of vehicles containing passengers or live-stock, is strictly prohibited.

189. Should a Guard observe any irregularity in the working of signals, or any obstruction on the line, or any defect in the signals, works, permanent way, or telegraph, he must report the same at the first station at which the train stops, and also in his journal: and must further report any unusual circumstance which he may have observed during the journey. But should the circumstance involve danger, he must use every endeavour to stop the train at the next station or signal box in order to report it.

Irregularity in working of signals to be reported.

Defective signals to be reported.

190. Except at places specially exempted upon each Railway, the absence of a Signal at a place where a Signal is ordinarily shewn, or a Signal imperfectly exhibited, must be considered a Danger Signal and treated accordingly, and the fact reported to the Station Master.

Absence of signal.
Same as Rules 79 and 258.

191. Every Guard must make himself acquainted with all instructions requiring his attention on those parts of the line over which he has to work.

Guard's orders.

192. A brake must be placed at the rear of every train unless special instructions are given to the contrary.

Brake on trains.

193. When a passenger or mixed train has come to a stand at a station— whether alongside, beyond, or short of the platform— the Driver must not move it for any purpose whatever, except upon instructions from the Guard under orders from the person in charge of the Station. The signal for the train to again move must not be given by the Guard until he has satisfied himself that no passenger is getting into, or out of, the train, and that all the carriage doors are closed. Before moving his train, the Driver must sound his whistle sharply and distinctly.

Train overruns or stops short of a station.
Same as Rules 109 and 254.

194. The Guard must take care that passengers enter the proper carriages for the places to which they are booked, and that no passenger is allowed to leave train for the purpose of re-booking by the same train with a view to evade payment of the proper fare.

Re-booking by same train.

195. Should a vehicle be attached to, or detached from, the rear of a train at an intermediate station, the Guard, or if there be more than one, the Guard in the rear van, must see that the Tail and Side Lamps are in their proper places on the train.

Tail and Side Lamps.

196. Should complaint be made of the running of any carriage, the Guard must report it to the Station Master, and enter the particulars in his journal, giving the number and class of carriage; but if the Guard has reason to apprehend danger from such carriage before it can be inspected, he must have it detached from the train.

Defective Carriages.

197. No carriage door shall be opened while the train is in motion.

Door to be closed.
Same as Rules 22 and 108.

198. When ladies are travelling alone the Guards are to pay every attention to their comfort; and in placing them in the train they must, if requested, endeavour to select a carriage (according to the class of their tickets) in which other ladies are travelling.

Ladies.

199. The Guard must not allow any passenger or parcel to be conveyed by the train unless properly booked; and, if he has reason to suppose that any passenger is without a ticket, or is not in the proper carriage, he must request the passenger to shew his ticket, reporting to the Station Master, or person in charge, any irregularity he may detect. When a passenger is desirous of changing from an inferior to a superior class of carriage, on payment of the difference in fare, the Guard must have this arranged by the Station Master or person in charge. See Rules 134 and 138.

Proper booking, &c.

200. The windows and lamp-holes of all empty compartments must be closed not only while the carriages are standing at stations, but also when the trains are running. See Rule 125.

Windows of empty compartments to be closed.

Train working between stations.
Same as Rules 133, 279 and 315.

201. In case a train may have to stop between stations, to take up or put down material, the permission of the Station Master of the last station before the stoppage has to be made must be obtained before the train leaves such station. The Station Master must take care to give all necessary instructions.

Infectious diseases.
Same as Rules 12 and 143.

202. No person suffering from an infectious disease shall enter a railway carriage or premises without previously notifying to the Station Master that he is so suffering, and obtaining from him permission to enter under special instructions.

Attendants.
Same as Rules 13 and 144.

203. Any one being in attendance on a person suffering from an infectious disease is subject to the same restrictions while travelling by railway as if he himself were suffering from the disease.

Reserved compartment for infectious diseases.
Same as Rule 145.

204. No person suffering from an infectious disease is to be allowed to travel in the same compartment with other passengers, but must take and pay for reserved accommodation, and special precaution is to be taken against the infection being communicated to other persons on the railway premises.

Power to remove persons suffering from infectious disease.
Same as Rule 146.

205. Any person found suffering from an infectious disease in a railway carriage or in any place on a railway where there is likelihood of the infection spreading, and who has not obtained the permission of the Station Master under Rule 12, is to be removed from the railway premises, and shall, on conviction under section 269 of the Indian Penal Code, be liable to imprisonment for six months, or to fine, or to both, or on conviction under section 270 of the Indian Penal Code, be liable to imprisonment for two years, or to fine, or to both.

Disinfection of carriages.
Same as Rule 147.

206. If any railway carriage has been entered by a person suffering from an infectious disease, such carriage must be disinfected immediately after it has arrived at its destination, and no passenger shall be allowed into it until the disinfection has been completed.

Prisoners and insane persons.
Same as Rule 148.

207. Prisoners and persons afflicted with insanity must not be allowed to mix with other passengers, but must be placed with their escort in a prison-van or separate compartment upon reserved accommodation being paid for.

Disorderly passengers.

208. In the event of any passenger being drunk or disorderly, or causing annoyance to others the Guard is to use all reasonable means to stop the annoyance; failing which, he must, for the safety and convenience of all, have him removed from the train at the first station, and the offender is liable to prosecution under the Railway Act.

Duties of Guard in charge.

209. The Guard in charge must satisfy himself before starting, and during the journey, that the train is properly loaded, marshalled, coupled, lamped, greased or oiled and sheeted, that lashings and chains are secure, also that the brakes are in good working order, and, as far as he can ascertain, that the train is in a state of efficiency for travelling, and has the proper signals attached to it. He must carefully examine the loading of any vehicles he may attach on the way, and should any vehicle become unsafe from the shifting or derangement of the load, he must, at once, have the load re-adjusted, or the vehicle removed from the train.

Attaching and detaching vehicles.

210. When from any cause a train has been brought to a stand on the line, where the line is not level, and it is necessary for the engine to be detached from the train for the purpose of attaching or detaching vehicles, the Guard must before the engine is uncoupled, satisfy himself that the van-brakes have been put on securely, and, as an additional precaution, must pin down a sufficient number of other brakes, or carry out such other instructions as may be prescribed. See Rule 122.

Where line is level.

When the line is level, the van-brakes must be put on securely.

Travelling cranes.

211. Before attaching any travelling crane, the Guard must see that the jib is properly lowered and secured. It must, when practicable, be so placed that the jib will point towards the rear of the train.

212. When the jib of a crane or a load projects beyond its truck, whether standing in a yard or on a running train, it must be protected by a dummy, which dummy may be loaded.

Dummy Wagon. Same as Rule 118.

213. Guards must not leave their trains until they have been properly handed over.

Delivery of train.

SECTION IX.

Drivers and Firemen.

214. Drivers and Firemen must be with their engines at such time before starting as the Locomotive Superintendent may require, and must satisfy themselves that their engines are in proper order.

Attendance.

215. Every Driver must have with him, at all times when on duty, such flags, lamps, tools and other appliances as may be ordered by the Locomotive Superintendent from time to time.

Equipment.

He must also have with him a copy of these Regulations, and the working time-tables in force upon the lines over which his engine has to run.

Regulations and working time tables.

216. No person other than the Driver and Fireman is to ride on the engine or tender without permission from a properly authorized officer.

No unauthorized person to ride on engine.

217. Drivers must always sound the whistle before putting an engine in motion.

Whistle to be sounded.

218. No engine shall be allowed to be in motion outside station limits unless both the Driver and Fireman are upon it.

Engine in motion.

219. Every Driver must make himself acquainted with all instructions requiring his attention on those parts of the line over which he has to work.

Acquaintance with instructions.

220. The Driver must place his engine in front of the train not less than five minutes before the time of starting; after that time, and until the end of the journey, he will receive his orders from the Guard in all matters affecting the starting, stopping or movement of the train; and he must promptly obey all orders or signals given to him, whether by the Station Master or the Guard, so far as the safe and proper working of his engine will allow.

Drivers to receive orders from Guard.

221. The Driver must afford such assistance with his engine as may be required for the formation, arrangement and despatch of his train.

To assist in forming train.

222. Firemen must obey the orders of the Driver in all particulars; and they are held jointly responsible with the Driver for the proper observance of all Rules and Regulations.

Firemen responsible.

223. The Driver and Fireman must, frequently, during the journey, look back and see that the whole of the train is following in a safe and proper manner.

To look back.

224. The signal for starting a train must be given to the Driver by the Guard, but before starting the Driver must have the permission prescribed by the rules of the system adopted for working the line and must satisfy himself that the line before him is clear, and he must sound the whistle.

Starting.

225. No engine shall enter upon or cross the main line without the permission of the person in charge of the points and signals, and the Driver must satisfy himself that the proper signal has been exhibited.

Protection of main line.

Engine-lamps.

226. The Driver must, before starting, see that his lamps are in good order, and that his engine carries the proper distinguishing lights, or other indicators of the train. At and after sunset, and during foggy weather, he must have the necessary lamps lighted. He is responsible that they are always in proper order and trimmed, and that, when lighted, they burn brightly.

Look-out.

227. The Driver must keep a good look-out all the time the engine is in motion, and Firemen must also keep a look-out, when not necessarily otherwise engaged.

In foggy weather and storms.

228. The Driver and Fireman must carefully observe all signals; and when from fog or storm or any cause, the fixed signals are not visible, as soon as usual, every possible precaution must be used, especially in approaching stations and junctions, so that the train can be stopped short of any obstruction, should the signals be against it.

Speed.

229. The Driver must regulate the running of his engine as accurately as practicable, according to the Working Time-table, so as to avoid extreme speed or loss of time.

Tender foremost.
Same as Rule 9.

230. No Driver shall run his engine with tender, or any portion of a train, or fuel-truck, foremost (except within station limits), without a written order, or unless, in cases of unavoidable necessity, to be established by the Driver.

Station Signals.
Same as Rule 70.

231. Station signals are placed at stations, junctions, sidings outside station limits, and signal-boxes, and when at "Danger," no train or engine must pass them, or foul the crossings or points to which they apply, except as prescribed in Rules 233 and 235.

Station signals at junctions.
Same as Rules 71 and 158.

232. Station signals at junctions must never be passed when at "Danger" by the train to which the signal applies.

Station signals other than at junctions.
Same as Rules 72 and 159.

233. Station signals at stations, sidings, and signal-boxes (other than at junctions) must never be passed when at "Danger," unless the Driver is signalled past by hand by a person duly appointed by an authorized officer.

Distant signals.
Same as Rule 76.

234. When a distant signal is at "Danger," the engine-driver of an approaching train must bring his train to a *dead stop* outside of it, and must then ascertain if the line is clear to admit the train within it. If the line be clear he must at once draw the train cautiously within the distant signal so as to be protected by it, and then stop until signalled into the station in accordance with rules prescribed by the authorized officer. If, however, there is any obstruction on the line so near to the distant signal as to prevent the whole of the train from passing safely within it, the rules for the protection of trains when stopped outside station limits, must be immediately carried out. See Rule 240.

Station and distant signals apply only to trains running in proper directions.
Same as Rule 77.

235. Station and distant signals apply only to trains or engines running in the proper direction and must not be used for any other purpose. Trains or engines shunting from one main line to another, or shunting into, or out of, sidings connected with the main line, must, unless special signals are provided for the purpose of signalling such operations, be signalled past the station signal, either verbally, or by hand-lamp or flag, as occasion may require; it being necessary, in such cases, that the danger signal should be exhibited at the station signal, as well as at the distant signal, for the protection of the train or engine so employed.

Observance of signals.

236. The Driver and Fireman must pay immediate attention to and obey all signals, whether the cause of the signal being shewn is known to them or not. The Driver must not, however, trust entirely to signals, but must, on all occasions, be vigilant and cautious.

Train to be stopped on explosion of detonator.

237. A detonator explodes with a loud report when an engine passes over it, and the Driver must stop as quickly as possible and then proceed cautiously to the place of obstruction, or until he receives the "All Right" signal. See Rule 84.

238. Except at places specially exempted upon each Railway, the absence of a signal at a place where a signal is ordinarily shewn, or a signal imperfectly exhibited, must be considered a danger signal, and treated accordingly, and the fact reported to the Station Master.

Signal imperfectly shewn.
Same as Rule 79 & 190.

239. When, from any cause, an engine, or train without a Guard, is stopped upon the line outside station limits unprotected by fixed signals, the Driver must send his Fireman, or some other competent person with signals, to protect the engine or train during the time it is in such a position in the manner prescribed for the Guards in Rule 240.

Engine without Guard.

240. Except as provided in Rule 241, when a train has been stopped, from any cause, outside station limits on the double line, the Head Guard must go, or see that a competent person be sent back, shewing danger hand signals, having with him detonators (to be used by day as well as by night), to stop any train approaching on the same line of rails.

Train stopping out side station limit.
Same as Rule 179.

The person going to protect the train must place upon the rails on which the train has been running, two detonators 10 yards apart, at a distance of three quarters of a mile on a gradient of one in two hundred and fifty $\frac{1}{250}$ or steeper, falling in the direction of the train, or half a mile on any flatter gradient, or on the level, and he must also, on his way out, place one detonator at half those distances respectively. He must remain exhibiting his hand danger signal at the further distance until recalled by engine whistle, or otherwise, when he must leave down the two most distant detonators, taking up the other on his way back.

On a double line, should both roads be fouled, detonators and hand signals must be used on each line in the manner prescribed, and all trains approaching from either direction must be stopped.

In the case of a single line the train must be protected, in the same manner, in front as well as in rear.

If one, or more, trains approach the obstruction, the train which last arrives must be protected in the rear in the manner prescribed, and when the other train or trains are thus protected in that direction, the person or persons who protected such other trains can return, and the intermediate detonators may be removed.

When the mixed gauge is laid, detonators must be placed on each rail, both for the broad and the narrow gauge trains.

On the single line the rear of a train must be protected first, and in cases on the double line, when both roads are obstructed and men are not available to be sent out in both directions at the same time, the Guard must use his discretion as to which road shonld be first protected.

When necessary a Fireman must be sent out with the signals for the protection of the train.

Should the stoppage occur to an engine not attached to a train, the Driver must take the prescribed precautions for its protection.

On the double road, should both lines be fouled, the Driver must aid the Guard and at once display a "danger signal" to the front, and, if the engine is not disabled, it should be used to convey the person who goes forward to the proper distance.

When starting a train which has stopped outside station limits, the Guard and Driver must exchange signals. Unless these signals are exchanged the Driver must stop.

241. Ballast or other trains, the working of which requires that they must stop outside station limits, may be protected by special regulations; but unless so specially provided for in each case they must be protected as prescribed in Rule 240.

Trains working between stations.
Same as Rule 180.

242. Should any part of a train become detached when in motion, care must be taken not to stop the front part before the rear portion has been stopped, and the rear Guard must promptly apply his brake to prevent a collision with the front portion.

Train parting.
Same as Rule 185.

243. When a portion of a train is left on the line outside station limits from accident or inability of the engine to take the whole forward, the Guard must put down the brakes and carefully secure the rear portion, so that it will remain stationary, and it must be protected in the manner prescribed in rule 240. The Driver must not return for the second portion on the same line except upon written instructions from the Guard, and if, upon the double road, no such written instructions are given, the engine must return upon the proper line under the rules of the system adopted for working, and cross at the nearest points to the rear of the part left, which he must work to a station or siding where he can again shunt to the front of the train. If it is necessary for the engine to return to the rear portion of the train on the same line, the Driver must, before starting with the front portion, obtain from the Guard the necessary written instructions authorizing him to do so, and the Guard must in such cases continue to protect his train in the rear, and must not permit a following train to move it.

Portion of Train left on Main Line. Same as Rule 182.

When there are two Guards with a train so divided, the second Guard, or, if there is only one Guard, the Fireman must, if practicable and safe to do so, ride upon the last vehicle of the front portion until it is placed in a siding.

244. Drivers must not pass through facing points at a speed exceeding ten (10) miles per hour.

Speed through facing points.

245. In the absence of special rules to the contrary, when a Driver requires the assistance of the Guard's brake, he must give three or more short, sharp whistles, or sound the brake whistle (when a special whistle is supplied for that purpose), and apply the communication, where such exists. See Rule 174.

Signal to Guard.

246. No engine shall be allowed to push a train or portion of a train or fuel truck, unless within station limits, or under special instructions.

Engine not to push. Same as Rules 6 and 183.

247. When two or more engines are employed in drawing the same train, the Driver and Fireman of the leading engine are responsible for the observance of signals; the Drivers of the other engines must watch for and take signals from the Driver of the leading engine.

Train drawn by more than one engine.

248. On both double and single line between sunset and sunrise and during foggy weather, every train must exhibit a red tail light and two red side lights in rear of the train; and every engine running alone must exhibit at least one Red Tail Light; in both cases Head Lights prescribed by the authorized officer must be exhibited.

Train lights. Same as Rule 85.

In the case of two or more engines running coupled together without a train, the first engine only must exhibit the prescribed Head Lights and the last engine only must exhibit at least one Red Tail Light.

This rule does not apply to engines and trains doing station work.

249. Whenever on the double line a Driver observes anything wrong on the road opposite to that on which he is running, he must sound his whistle and exhibit a "Danger" signal to any train he may meet, and stop at the first signal-box or station in order to report that which he has observed.

To signal train on opposite line.

250. Whenever on the double line a Driver observes a train following too closely any preceding train on the road opposite to that on which he is running, he must sound his whistle and exhibit a caution or danger signal, as occasion may require, to warn the Driver of such following train.

Following too closely.

251. The Driver must start and stop his train steadily and without a jerk.

To start and stop with care.

He must exercise care in approaching all stations at which his train is required to stop and in passing stations at which he is not required to stop.

In stopping his train he must pay particular attention to the state of the weather and the condition of the rails, as well as to the length of the train; and these circumstances must have due weight in determining when to shut off steam.

252. Should another train be approaching, stopping at, or leaving the station, on the opposite line, or should shunting operations be going on, the Driver must, on approaching and whilst passing through a station, sound the engine whistle.

Use of whistle.

The whistle must also be sounded on entering a tunnel, and repeated in long tunnels.

253. On the double line trains must invariably be run on the left hand road except under special instructions to the contrary.

Trains run on left hand road.

254. When a passenger or mixed train has come to a stand at a station—whether alongside, beyond, or short of the platform—the Driver must not move it for any purpose whatever except upon instructions from the Guard under order of the person in charge of the station. The signal for the train to again move must not be given by the Guard until he has satisfied himself that no passenger is getting into, or out of, the train, and that all the carriage doors are closed. Before moving his train, the Driver must sound his whistle sharply and distinctly.

Trains over-running or stopping short.
Same as Rules 109 and 193.

255. Where the block system is not in operation, no train or engine shall be allowed to follow any other train or engine on the same line within ten minutes, unless it has been ascertained that the preceding train has arrived at the next station in advance.

Interval of time between trains.
Same as Rules 22 and 127.

256. When the line is not worked under the block system, no passenger train shall follow a goods train nor shall a fast goods train follow a stopping passenger train from a station within fifteen minutes, nor even then until the Driver has been properly warned of the time of the departure of the preceding train, and where it will next stop. But in case the distance to the next station in advance exceeds ten miles, the interval must be increased under special instructions of the authorized officer.

Following trains.
Same as Rules 24 and 128.

257. Should a Driver observe any irregularity in the working of signals, or any obstruction on the line or defect in the signals, or any defect in the works, permanent way or telegraph, he must report the same at the first station at which he stops, and at the end of his journey he must also report any other unusual circumstance that he may have observed.

Defect in roads or signals.

But should the circumstance involve danger he must stop at the next station or signal-box in order to report; and should it be necessary for the safety of the traffic he must stop at once.

258. Fly shunting of vehicles against loaded passenger trains, or of vehicles containing passengers or live-stock, is strictly prohibited.

Fly shunting.
Same as Rules 123 and 188.

259. If an engine is running without a Guard, the Driver is responsible for carrying out all rules and for taking all necessary precautions which the Guard is required to observe for the safe working and protection of trains.

Light engine.

260. Should a Driver observe a train or engine obscured by steam or smoke, on the opposite line to that on which he is travelling or on a siding, he must sound his whistle and approach it cautiously, so as to be able to stop if necessary.

Train obscured by steam.

261. A green flag or a green light exhibited by Platelayers, indicates that speed must not exceed fifteen miles an hour, or such lower speed as may be ordered, over the portion of line protected by such signal.

Platelayer's signals to reduce speed.
Same as Rule 274.

262. Shunting engines employed in station yards and sidings must after sun set and in foggy weather, carry the prescribed head and tail lights.

Lights on shunting engines.

263. After taking water from tanks or water columns, Drivers must be careful to leave the hose or water crain clear of the main line and properly secured.

Water columns.

264. The Driver when on duty at stations or on the line must not leave his engine unless it is absolutely necessary for him to do so, and, under no circumstances, without a man being left in charge of it.

Driver leaving engine.

265. Drivers with trains or engines must run within the limits of speed fixed for the section of the line upon which they are running.

Speed.
Same as Rule 29.

266. Drivers with engines or trains must not make up between any two stations more time than is allowed to be made up in that distance by an authorized officer.

Making up time.
Same as Rule 30.

SECTION X.

Inspectors, Platelayers, Gangers, and others employed on the Permanent Way.

267. The Inspector or person in charge of each district of the line will be held responsible for the condition of the permanent way and works in his district. He must keep an account of all materials used, and must see that none are wasted. He must also report promptly to the Engineer in charge of the district all accidents, and all defects in the road or works that may interfere with the safe running of trains.

Duties of Inspectors.

268. In each gang of platelayers or men repairing the permanent way, there shall be a Foreman, Ganger or Maistry; and the Inspector of permanent way for the district must take care that every such man in charge of a gang is provided with a copy in the vernacular of the section of these Regulations which relates to his duties, also with proper signals, a permanent-way gauge, and all necessary tools, which he must inspect at least once a month and ascertain that the gauges are correct, and the tools and signals are in good order, and that no articles have been lost.

Foremen.

269. Each Foreman, Ganger or Maistry is responsible that the subordinates working under him are acquainted with all the rules relating to their respective duties.

Rules to be explained.

270. Each gang of platelayers or laborers must be supplied by the Inspector of permanent way for the district with two sets of flag signals, two hand signal lamps, and a proper number of detonators. Each Ganger will be held responsible for having his signals constantly in proper order and ready for use.

Lamps and signals to be supplied.

271. The Inspector must take care that all Regulations are observed and report any departure from them to the Engineer.

Observance of Regulations.

272. Each Inspector must have a register of the name and place of residence of all the Foremen and Gangers employed in his district, so that, in case of accident he may be enabled to call upon them to summon their men immediately to assist in any way that may be required; and should any obstruction take place, caused by slips or other sudden emergency, each Foreman or Ganger must immediately collect the men required.

Register of names.

Must summon men.

273. The signals to be used by the men engaged in repairing the permanent way or red and green flags and hand lamps and detonators. The flags must be used during daylight, the lamps after sunset and in foggy weather, and the detonators when necessary, by day and night.

Signals.

The red and detonating signals indicate "Danger," and must be used only when it is necessary to stop a train. The green signal indicates "Caution," and must be used when it is necessary to slacken the speed of a train.

274. A green flag or a green light, exhibited by Platelayers, indicates that speed must not exceed fifteen miles an hour, or such lower speed as may be ordered, over the portion of the line protected by such signal.

Signal to reduce speed.
Same as Rule 261.

275. The permanent-way staff or others must not put in points and crossings without the written authority of the Engineer in charge of the district, and must not begin or perform any operation which will involve danger to trains or traffic without the previous permission of the Permanent-way Inspector, or other authorized competent person, who must himself be present to superintend such operation, and who is responsible that all necessary signals are shewn and other precautions taken as prescribed in Rules 276 and 277, as the case may be, before the commencement of work, and that such signals and precautions are continued until the line is again clear for trains or traffic. But in cases of emergency when it may be necessary for safety to replace or turn any rail or otherwise obstruct traffic before the Inspector can arrive, the Ganger or other person in charge of the gang must take all necessary steps to protect trains and traffic as prescribed in Rules 276 and 277.

Permission of Inspector to commence work.

276. When it is necessary within station limits to change or turn a rail, or in any manner to obstruct the line, or to do any work of a character to make the exhibition of a signal necessary, the permission of the Station Master must be first obtained by the Foreman, Platelayer, or Ganger, and the work must not be commenced until all necessary signals have been placed at "Danger," and the signals must remain in that position until the Station Master, or Ganger, is informed by the same Platelayer that the line is again clear and safe for traffic.

Work in station limits.

The Platelayers must, in addition, protect their operations by hand signals.

277. When outside station limits a rail has to be taken out, or the line is not safe from any cause, a "Danger" signal must be exhibited, and two detonators placed on the line, ten yards apart, at a distance of at least three-quarters of a mile on a gradient of one in two hundred and fifty or steeper, falling in the direction of the obstruction, and half a mile on a flatter gradient or on the level, in rear of the place of obstruction on the double line, and in both directions on a single line; and hand signals must also be exhibited at the place where the work is being done.

Work outside station limits.

278. Platelayers and laborers must not, except in case of emergency, or as provided in Rule 276, avail themselves of the Fixed Signals, and must, in all cases, use their own special signals for their own purposes.

Fixed Signals not to be used.

279. In case a train may have to stop between stations to take up or put down material, the permission of the Station Master of the last station before the stoppage has to be made must be obtained before the train leaves such station. The Station Master must take care to give all necessary instructions.

Ballast train working between stations. Same as Rules 133, 201, 315.

280. When repairing, lifting the line or performing any operation so as to make it necessary for a train to proceed cautiously, the Foreman or Ganger must send a man back at least a quarter of a mile and as much further as the circumstances of the case render necessary, to exhibit the "Caution" signal so as to be plainly visible to the Driver of an approaching train.

Signals when repairing line.

281. In no case, except when absolutely necessary, is a rail to be displaced or any other work to be performed, by which an obstruction may be made to the passage of the trains during a fog or storm; and the times for effecting repairs which involve the stopping of trains must, as far as practicable, be so selected as to interfere as little as possible with the passage of the traffic.

Rails not to be displaced in fog.

282. A lorry or truck, loaded or empty, used for conveying materials, must be taken in the same direction as that in which the trains run on double line, and must be followed at a distance of not less than half a mile by a man with Danger hand-signals and detonators. In the case of a single line where trains run in both directions, the lorry or truck must be protected in both directions.

Protection of lorry or truck on line.

On no occasion must a lorry be run in the wrong direction on a double line.

283. No lorry, used for the conveyance of material, or trolly for the conveyance of men, may, in any case, be placed on the line, except by the authorized person who is responsible for its proper protection and use according to the rules in force on the Railway.

Responsibility for lorries.

Security of lorry.

284. No lorry or trolly shall, under any circumstances, be attached to a train, and all lorries and trollies, when not in use, must be taken off the rails, placed well clear of the line, and the wheels secured with chain and padlock.

Main line to be clear.

285. No Ballast train, wagon, truck, lorry, or other impediment shall be allowed to be on any part of the main line within ten minutes of a train being due, except on lines worked on the block system when the time must not be less than five minutes; and excepting in cases of accident, or absolute necessity, all repairs must be effected, and the line made clear and safe for the passage of trains not less than ten, or five, minutes, as the case may be before a train is due. See Rule 317.

Ballast train.

286. All persons in charge of Ballast trains must obey the orders of Station Masters so far as relates to the time of their running on the line, and no Driver of a ballast train must leave a siding without the necessary permission.

Guards.

287. Guards of Ballast trains are responsible for carrying out Rules 179 and 180, and all other regulations prescribed for Guards for the protection of trains.

Ballast trains not to work during fog.

288. Ballast trains must not work between stations in a fog except when authorized under special circumstances, and no Ballast train, wagon, truck, or lorry must be run, if it can be avoided, except during daylight, and when the weather is sufficiently clear for a signal to be distinctly seen at a distance of half a mile. But when necessary to run a Ballast train at night, or during a fog, it must be protected by the prescribed lights. See Rule 313.

Accident or failure of works.

289. Any accident to a train or engine, or failure of any part of the works affecting the safety of the line, must be reported as soon as possible to the nearest Inspector of permanent way and to the Station Masters on both sides of the point at which the accident or failure has occurred.

Road to be inspected.
Same as Rule 26.

290. Every portion of the permanent way must be inspected daily on foot by some authorized person responsible for its condition; and bridges and all other works (including signals and signal wires) must be regularly inspected in accordance with rules laid down by the authorized officer.

Defects of wires, &c.

291. Each Foreman, Ganger or Maistry must report to the Inspector of permanent way when any telegraph post appears to be in an unsafe state, or any of the signal or telegraph wires are broken, slack, entangled, or touching each other or any building. He must also see that all grass, creepers, boughs of trees, and rubbish are removed from the wires.

Where the maintenance of the telegraph posts and wires is under the control of the Government Telegraph Department, the removal of grass, creepers, boughs of trees, and rubbish will be carried out by the Government Telegraph Officers, and all reports of defects in posts and wires should be made to the officers of that Department by the Inspector.

Lifting permanent way.

292. In lifting the permanent way, no lift must be greater than three inches at once, and then it must be effected in such a manner as not to occasion any sudden change of gradient. Both rails must be raised equally and at the same time, and if possible the ascent must be made in the direction in which the trains run.

Ballast thrown up.

293. No Ballast shall be thrown up to a higher level between the rails than three inches on the 5 feet 6 inch gauge, and not higher than rail level on the metre or other narrow gauge, and it must be thrown as much as possible on the outside of each line, or between the two roads. The rails must be kept clear of gravel, ballast, or any other material.

Wagons in sidings.

294. No vehicle shall be left in any siding outside station limits without the wheels being properly secured, clear of all running lines.

Blasting.

295. No blasting shall be allowed on or near to the Railway, without the authority of the Engineer in charge.

296. Gangers must close and fasten all gates they find open, and report the circumstances.

Gates to be closed.

297. Each Foreman, Ganger or Maistry must, in the event of a flood, carefully examine the action of the water through the culverts and bridges on his length of line; and should he see any cause to apprehend danger to the works, he must immediately exhibit the proper signals for the trains to proceed cautiously, or to stop, as necessity may require, and inform the Inspector thereof; and until the Inspector arrives he must take precautionary measures for securing the safety and stability of the line.

Works in floods.

298. In the event of any fire upon or near the line, the men employed on the line must take immediate measures for putting it out.

Fire.

299. Gangers must keep clean the working parts of points and signals, unless the duty is otherwise specially provided for.

Cleaning of points and signals.

300. Each Foreman or Ganger must keep his portion of the line clear and safe, and the fences in repair; and if any sheep, cattle, or other animals be on the line or within the fences, he must immediately remove them, and report the circumstance to the Inspector of permanent way.

Line to be kept clear.

301. Foremen or Gangers must see that all broken chairs, rails, sleepers, or other defective materials, are removed from the road with the least possible delay, and sound material substituted.

Defects.

All tools, rails, sleepers, pieces of iron or wood, or other implements or materials must be carefully placed so as to be quite clear of the line, and not within three feet of the rails.

Materials clear of rails.

302. Each Inspector of permanent way will be held responsible for the security of all rails, chairs, sleepers, and other permanent way materials, in his district. They must be kept clear of both lines and properly stacked.

Custody of materials.

303. Each Foreman or Ganger is responsible on his own length of line for the security of tools and implements supplied to him.

Custody of tools.

304. When a train is approaching, Platelayers and laborers must stop work and stand clear of all the lines.

Platelayers to stand clear.

305. Each Foreman or Ganger will be responsible for collecting any coupling chains, hooks, pins, iron, or other materials which may be found on the line, and for having them conveyed to the nearest station.

Materials found upon line.

306. All luggage, goods, or articles found on the line, must be taken to the nearest station, and a report made containing the best information that can be obtained respecting the train from which they may have fallen.

Articles found on line.

307. Gangers and others employed on the line must order off the Railway all trespassers, who, if they persist in remaining, may be immediately removed from the Railway by any Railway servant or by any other person.

Trespassers.

SECTION XI.

Regulations for Ballasting.

Ballast train Rules.

308. Ballast trains must, except where specially exempted, be worked under the same rules and regulations as other trains.

Guards.

309. Guards and Brakesmen of Ballast trains shall be experienced men selected from the train Guards.

To accompany train.

310. A Guard or Brakesman must accompany each Ballast train.

P. W. men to assist in working signals.

311. The Guard or Brakesman of a Ballast train has authority to require those employed in repairing the permanent way and works to assist him in working signals.

Ballasting.

312. No ballasting is to be carried on except with the permission of the Engineer in charge of the section of the Railway.

Ballast engines not to work at night

313. Ballast trains are prohibited from passing along the main line at night, or in a fog, or during a heavy rain, except when authorized to do so under special circumstances, and then must not move faster than fifteen miles an hour. But when necessary to run a Ballast train at night, or during a fog, it must be protected by the prescribed lights. See Rule 288.

Ballast train to keep clear of traffic trains.

314. The Guard of a Ballast train is held responsible for keeping clear of all other trains. When a Ballast train has to work on the line between two stations, the Guard must, when practicable, arrange with both Station Masters where and when the next train is to be passed.

Train working between stations.
Same as Rules 130, 201 and 279.

315. In case a train may have to stop between stations to take up or put down material, the permission of the Station Master of the last station before the stoppage has to be made must be obtained before the train leaves such station. The Station Master must take care to give all necessary instructions.

Authority to leave station.

316. The Guard must, before leaving a station, receive a line clear message with the necessary instructions endorsed upon it, or the usual authority for leaving a station in accordance with the system in force for working the traffic.

Main line to be clear.

317. No Ballast train, wagon, truck, lorry, or other impediment shall be allowed to be on any part of the main line within ten minutes of a train being due, except on lines worked on the block system, when the time must be not less than five minutes. See Rule 285.

Ballast train running through.

318. When the Ballast train is intended to run through from one station to another, without working between them, it must be treated as an ordinary or special train.

Wagons to be secured.

319. When Ballast wagons are left on a siding outside station limits, the Guard must secure a wheel of the wagon nearest to the points of the siding, and he is responsible that the vehicles are properly secured in accordance with rules prescribed by the authorized officer, and that the scotch blocks, were provided, are fastened.

Working outside station limits.

320. Ballast trains, the working of which requires that they must stop outside station limits, may be protected by special regulations; but unless so specially provided for in each case they must be protected as prescribed in Rule 179.

Pushing train.

321. Ballast trains may be run with a pushing engine on a written order, but in such cases the speed must not exceed fifteen miles an hour, or such lower speed as may be ordered.

Coolies.

322. Guards in charge of Ballast trains must, before giving the starting signal, tell the coolies working with the train and riding in the open trucks to sit down.

SECTION XII.

GATEMEN AT LEVEL-CROSSINGS.

Gate signals.

323. All level-crossings of which the gates close across the Railway must be provided with red signal boards, and with lamps shewing red, up and down the line, when the gates are closed across the line. The lamps must be kept lighted from sunset to sunrise and during foggy weather.

Gateman's equipment.

324. Every Gateman must be provided with day and night signals, which he must keep in proper order, reporting immediately any defect he may observe to his superior officer.

Gates open to Railway.

325. Unless specially ordered to the contrary, the gates at all thoroughfares must be kept open for the passage of trains, and securely closed across the thoroughfare, except when required to be open for the road traffic, and must then as quickly as possible be closed again across the thoroughfare. Before opening the gates the Gateman must look up and down the line to assure himself that no train is approaching.

Gates open to roads.

326. Where special authority is given, gates made to close across the Railway may be kept open to the public thoroughfare, except when an engine or train is due or expected, at which time such gates must be closed and fastened across the public thoroughfare ; and until such engine or train has passed, the gates must be kept closed, and no person or thing is to be allowed within them. While the gates are closed across the Railway and open to the thoroughfare, the "Danger" signal must be exhibited both up and down the line. In opening double gates closing across the Railway for an approaching train where there is only one signal lamp to each gate, the half with the signal lamp attached is not to be moved until the other half is shut across the thoroughfare.

Further gate to be first open.

327. The gate towards which road traffic is approaching must not be opened until the opposite gate has been opened, so as to allow it to cross over without stopping upon the line.

Trains to be observed.

328. Every Gateman must take particular notice of each train, and if he should see anything wrong, he must shew a "Danger" signal to the Guard and Driver.

Position of Gateman.

329. In all cases the Gateman, when signalling, is to stand in a position clear of the rails where he can be seen by the approaching Driver.

Knowledge of signals.

330. All Gatemen must have a knowledge of hand signals.

Gates out of order.

331. If any gates or fastenings are out of order, the Gateman must immediately report to his superior officer, and to the nearest Platelayer, in order that the gates may be made safe.

Prevent trespassing.

332. Gatemen are to prevent as much as possible any trespassing on the Railway, and every case of trespass must be immediately reported ; and they are also to report any irregularity in the signals, or their working, or other infringement of the Railway Regulations.

Huts, &c., to be clean.

333. Gatemen must keep themselves, and their clothes and huts, neat and clean ; they must also take care that the channel for the flange of the wheels is always clear before passage of each train ; that the rails and way are clear, and that rubbish is not allowed to accumulate near the hut and crossings.

Obstructions.

334. In the event of the road being from any cause obstructed, the Gateman must do everything in his power by warning approaching trains to prevent accident.

Fixed signals to be tested.

335. At level-crossings where fixed signals are provided the Gateman must satisfy himself of the proper working of his signals both by day and by night, and must report immediately any defect to the Inspector of permanent way or other person in charge of the repair of signals, and also to the Station Master, or other person, under whose supervision he acts.

Fixed signals at crossings.

336. At level-crossings where the block system is not in operation, and where there are fixed signals, the "Danger" signal must be exhibited for at least five minutes after the passing of any train, after which, if the gates are open for the passage of trains, a "Caution" signal must be exhibited for a further period of five minutes.

SECTION XIII.

General Rules for working a line on the system termed "Line clear and caution message" in Rule 3, Section II.

Signals not dispensed with.

337. The working of trains on the "Line clear and caution message" system does not in any way dispense with the use of station distant or other signals whenever and wherever such signals may be requisite.

338. On a single line no engine with or without a train shall be permitted to leave one station for another until it shall have been ascertained by means of the electric telegraph that the line between those stations is clear of engines and trains coming in the opposite direction, and of all impediments as far as can be known.

Trains may follow one another between stations in the same direction, on both single and double line, under the following rules; and in accordance with Rule 339.

(*a*)—No train or engine shall be allowed to follow any other train or engine on the same line of rails within ten minutes, unless "Line clear" has been received.

(*b*)—No passenger train shall follow a goods train, nor shall a fast goods train follow a stopping passenger train from a station within fifteen minutes; and in case the distance to the next station in advance exceeds ten miles, the interval must be increased under special instructions of the authorized officer.

Caution message.

339. When one train follows another at an interval exceeding the limits laid down in Rule 338, it must run under the authority of a "Caution message," obtained in the manner prescribed in the rules in force on each Railway.

Authority to give line clear.

340. No one except the Station Master or other duly authorized person is to give or seek a line clear or caution message.

Time for seeking line clear.

341. A Station Master must not apply for a line clear message from the station in advance, until he has received advice that the approaching train has left the station in rear.

Driver to obtain written permission.

342. No engine or train shall be moved from any station until the Driver has in his possession a "Line clear," "caution message" or other permission written on the authorized form shewing that he can proceed to the next station. The Driver is to receive this written permission from no other person than the Guard of his own train, and must also receive from him the usual starting signal before moving.

Station Master to hand message to Guard.

343. The Station Master is to hand the written permission to the Guard, who must satisfy himself that it is properly filled up and dated, with the time added and is signed in full and in ink, and that it applies to the particular train or engine for which it is given and received, before handing it to the Driver. The Driver must also satisfy himself on these points before starting.

This written permission is never to be given to the Driver until the train is to start; and when waiting to pass another train, it must not be given to the Driver until the whole of such other train has come in and is clear of the points.

Forms and books.

344. No forms other than those specially provided from time to time for the purpose are to be used in working under this system. And each station must keep the regular books provided for by the working orders in force.

Message cancelled.

345. The leaves of these books are to be progressively numbered in type, and when any message has from any cause to be cancelled, the form to which it applies must also be marked as cancelled both on the form and counterfoil, and must be carefully preserved by doubling it on the counterfoil.

Messages to be numbered.

346. In addition to the progressive printed number every message from each station must be numbered to stations on each side from midnight to midnight, commencing with number one to each station, and this number is to be treated as a portion of the message and entered on the counterfoil.

Number to be quoted.

347. When a message is in reply to another, each station's number must be quoted at the beginning of the message.

Number to be quoted.

348. When the message bears reference to a former message in the same direction, the number of that message must also be quoted at the beginning.

Train to be described.

349. In train messages the engine or train must be distinctly described, as, for instance, "No. 2 Down ballast," "No. 4 Up goods," and so on; and for every train a separate enquiry and reply must be sent, but an enquiry and reply message must never be sent on one form.

Line clear enquiries.

350. In line clear enquiries the time of arrival of the last train in the opposite direction must always be given. If the train follows another on a caution message, the time of departure of the preceding train must be endorsed on the message.

Cancellation of line clear.

351. After a line clear message has been given and has been subsequently cancelled, no train is to be started in the opposite direction on a single line until a telegram has been received stating that the train for which the line clear had been first given is and will be detained, and that the message has been cancelled.

Message to be wholly written before despatch.

352. No part of any message affecting the passage of trains must be forwarded or acted upon, until the whole is written out, except when an accident may be prevented, or in other case of emergency.

Messages to be signed.

353. Line clear or caution permissions are not to be written out in full or in part, or signed, before they are required.

Form of messages.

354. All messages connected with train working, including line clear authorities, are to be written in ink or other indelible substance, and are also to be signed in full by the Station Master or other authorized person.

Message to be filled.

355. Line clear and enquiry messages must be retained for at least a fortnight.

Telegraph interrupted.

356. In case of failure or interruption of telegraph communication, trains must be worked between stations in accordance with prescribed rules.

SECTION XIV.

RULES FOR WORKING ON THE SYSTEM TERMED "TRAIN FOLLOWING" IN RULE 3, SECTION II.

357. This system is applicable only to double line working.

Applicable to double line.

358. Trains may follow one another in accordance with the following rules.

Trains may follow.

359. No train or engine shall be allowed to follow another train or engine on the same line of rails within ten minutes unless it has been ascertained by telegraph that the preceding train has arrived at the next station in advance.

Interval between trains.

360. No passenger train shall follow a goods train, nor shall a fast goods train follow a stopping passenger train, from a station within fifteen minutes, nor even then until the Driver has been warned in accordance with Rule 362. And in case the distance to the next station in advance exceeds ten miles, the interval must be increased under special orders.

Fast-train following.

361. Should a train arrive at a station within the limits of time in Rules 359 and 360, it must be stopped until the prescribed interval has elapsed.

Train to be stopped.

362. When one train follows another before the first has reached the next station, the Station Master must caution the Guard and Driver of the second train, giving them the time of departure of the preceding train. The order to proceed must be given in writing, and an acknowledgment in writing must be obtained from the Driver, the train being stopped out of course if not booked to stop.

Caution to following train.

SECTION XV.

GENERAL REGULATIONS FOR WORKING ON THE SYSTEM TERMED "ABSOLUTE BLOCK" IN RULE 3, SECTION II.

363. The object of the system of Electric Train-signalling is to prevent more than one train or engine being between any two Signal Stations on the same line at the same time. This is accomplished by not allowing any train or engine to leave a Signal Station till the previous train or engine has been signalled clear.

Object.

364. The Block System of train working by Electric Train-signalling does not in any way dispense with the use of out-door and hand signals, whenever and wherever such signals may be requisite.

Out-door Signals.

365. The Special Electric train Instruments, if provided, are exclusively for the signalling of trains, and must not, under any circumstances, be used for conversing nor for any purpose other than block working in strict accordance with prescribed rules, and they must only be used by the person appointed for the duty.

Instruments.

366. On those portions of any Railway which are worked on the Absolute Block System, a train or engine must not be allowed to enter any section until it has been ascertained by telegraph that the section is clear of trains or engines.

Absolute Block working.

Except when otherwise specified, a section is to be understood to be the line between two stations outside station limits.

367. Should there be reason to suppose that from accident or otherwise either or both lines are obstructed, care must be taken to advice other stations concerned so as to prevent trains from entering the section.

Both lines fouled.

368. In the event of any failure of the instruments so that the necessary signals cannot be forwarded and received, trains must be worked under Rule 338, and if telegraph communication is entirely interrupted, trains must be worked between stations in accordance with the prescribed rules.

Telegraph interrupted.

SECTION XVI.

REGULATIONS FOR WORKING SINGLE LINES OF RAILWAY ON THE SYSTEM TERMED "TRAIN STAFF AND TICKET" IN RULE 3, SECTION II.

Signals.

369. The Train Staff and Ticket System of train working does not in any way dispense with the use of outdoor and hand signals, whenever and wherever such signals may be requisite.

Staff Stations.

370. The working Time-tables will contain the necessary information from time to time as to the places which are appointed staff stations.

Staff or Ticket.

371. A Train Staff or Train Staff Ticket must be carried with each train or engine, and without this staff or ticket, no train or engine must be allowed to leave any station.

Staff at Stations.

372. No train or engine shall be permitted to leave any staff station unless the staff for that portion of the line over which it is to travel is then at the station.

Custody of Staff.

373. The person in charge of the station for the time being is the only person authorized to receive and deliver the staff or ticket, and all tickets must be cancelled directly they are handed to him after use.

Staff given to Driver.

374. When a train or engine is ready to start from a station, and no second train or engine is intended to follow before the staff will be required for a train in the opposite direction, it is the duty of the person in charge of the station to give the staff to the Driver, who shall then place it in a conspicuous place provided for that purpose on the engine.

Tickets to Driver.

375. If other trains or engines are intended to follow in succession before the staff can be returned, a Ticket indicating that the staff is following must be given by the person in charge of the station to the Driver of the first train or engine, the staff for the section being shewn to him and so on with any other train or engine, except the last, the staff itself being given to the Driver of the last train or engine, as directed in Rule 374. After the staff has been sent away, no other train or engine must, under any circumstances, leave the station to follow in the same direction until the staff for that station has been returned.

Driver to have staff of ticket.

376. No Driver with a train or engine shall leave a station until he has received the proper staff or ticket for that section of the line over which he is about to travel, and he must not take the staff or ticket from any other than the person in charge of the station for the time being. After receiving the staff or ticket, he must not start until the proper signals have been exhibited, nor when with a train, until a signal has also been given by the Guard. But he must not accept a Ticket in any case unless he sees the staff at the same time in the possession of the person who gives him such ticket. On arriving at the station to which the staff or ticket extends, such staff or ticket must immediately be given up to the person in charge of the station; and all tickets, so given up, must be immediately cancelled.

Distinguishing mark.

377. Each staff must have shewn upon it the name of the staff station at each end of portion of line to which it applies. The staff, boxes, and tickets for the different portions of the line must be distinguished by different colors.

Tickets.

378. The tickets must be kept in the proper ticket-box fastened by an inside spring, the key to open the box being the staff to which the tickets apply.

Record of tickets issued.

379. The Station Master must keep a record in a book of each ticket issued, shewing the number of tickets and the particular train or engine for which it is issued.

Staff at Station.

380. The staff, when at the station, must not be left in the box, but must be in the safe custody of the Station Master.

381. Drivers must not take the staff or ticket beyond the station at which it ought to be left.

Staff or ticket to be left.

382. When trains are assisted by a second engine in the front, the leading engine must carry the staff or ticket; but when the assisting engine is pushing the train, the train engine must carry a ticket, and the assisting engine the staff, except in cases where the train and assisting engine are travelling over the entire length of line to which the staff applies, and have to be followed by another train or engine, when the train and assisting engine must each have a ticket. When the assisting engine is intended to return to the station from which it started, without running through the entire portion of line to which the staff applies, it must always carry the staff.

Assisting engine.

383. In the event of an engine which carries the staff breaking down between two stations, the Fireman must take the staff to the staff station in the direction whence assistance can be obtained in order that the staff may be at the station on arrival of the engine. Should the engine that fails be in possession of a ticket instead of the staff, assistance must only come from the station at which the staff has been left. But if assistance can be more readily obtained at a station other than that where the staff is, immediate steps must be taken to have the staff transferred to the other end of the section. The Fireman must accompany the assisting engine to the place where he has left his own engine.

Engine carrying staff disabled.

Engine carrying ticket disabled.

384. When a Ballast train has to work between stations, the staff must be given to the Driver in charge of it. This will close the line whilst the Ballast train is at work. The Ballast train must proceed afterwards to one of the staff stations to open the line, before the ordinary traffic can be resumed.

Ballast train at work on the line.

Ballast trains not stopping to work between stations may run with staff or ticket as ordinary or special trains.

Sample form of Train Staff Ticket.

Ticket No. _____

_____ Railway.

TRAIN STAFF TICKET.

DOWN.

Train No. _____

_____ *h.* _____ *m. from* _____ *to* _____

To Driver and Guard.

You are authorized to proceed from

_____

To

_____

And the Train Staff will follow.

Train No. _____ *in front left* _____ *h.* _____ *m.*

Signed. _____

Officer in charge at

Date. _____

(Back of Ticket.)

When this ticket is given to the Driver, he must, before starting, see the Train Staff for the portion of line which he is about to enter.

This ticket is to be given up by the Driver immediately on arrival to the person in charge of the station to which he is authorized to proceed, and such person will be responsible that this ticket is *at once cancelled.*

SECTION XVII.

REGULATIONS FOR WORKING SINGLE LINES OF RAILWAY ON THE SYSTEM TERMED "TRAIN DESPATCHING" IN RULE 3, SECTION II.

This system is not to be extended to any Railway on which it is not now in force, and it is to be understood to be sanctioned only as an "ad interim" arrangement until one of the systems described in Sections XIII to XVI can be brought into use on the Railway.

Train run to Time-table.

385. The working of all ordinary trains shall be regulated by Time-tables, and no departure from the regular running shall be made without the order of an authorized officer, and such order shall be conveyed in writing, or in an attested copy of a telegram.

Special Train.

386. No special train, or Pilot engine, except in case of accident, shall leave a station or pass along the Railway, unless previous notice in writing shall have been given to each station, or notice shall have been sent by electric telegraph, and shall have been acknowledged at every station throughout the distance to which such engine or train is intended to proceed.

Assisting engine.

387. These rules will not prevent a Locomotive Foreman, or other servant acting in that capacity (should he be unable to communicate with the Traffic Officer in charge of the Division, or, if by so doing, unnecessary time would be lost) from sending, with the concurrence of the principal officer at the station, an engine to assist a disabled train, provided that both have satisfied themselves that there is no danger in such act.

SECTION XVIII.

REGULATIONS FOR WORKING SINGLE LINES OF RAILWAY ON THE SYSTEM TERMED "PILOT GUARD" IN RULE 3, SECTION II.

This system is only to be held as applicable to short Branch Lines.

Pilot Guard to start trains.

388. The Pilot Guard will be distinguished by a red dress or badge; and no train or engine shall, under any circumstances, be allowed to run on the line unless it is either accompanied or personally started by the Pilot Guard wearing such dress or badge.

Pilot Guard, when practicable, to accompany every train.

389. The Pilot Guard will, when practicable, accompany every train; but when it is necessary to start two or more trains from one end of the portion of line under his control before a train has to be started from the other end, the Pilot Guard must furnish the Guard in charge of each train not accompanied by himself with a printed Pilot Guard's ticket, where such are provided, properly filled up and signed, and personally start such train, and must himself accompany the last train. The ticket will apply only to the single journey to the station named on it, where it must be immediately given up to the person in charge of the station, and all tickets so given up must be immediately cancelled.

Exception.

Driver to see Pilot Guard.

390. The Driver must not start his train without seeing the Pilot Guard. But if the Pilot Guard does not accompany the train, the Driver must not start until he has received from the Guard of his train the Pilot Guard's ticket authorizing him to proceed. A Driver working an engine, unaccompanied by a Guard, must observe the same regulations as herein laid down for a Guard with a train.

SECTION XIX.

REGULATIONS FOR WORKING SINGLE LINES ON THE SYSTEM TERMED "ONE ENGINE ONLY" IN RULE 3, SECTION II.

This system is only to be held us applicable to short Branch Lines.

One engine in steam.

391. Only one engine in steam, or two or more coupled together, which are then to be treated as one engine or train, must be allowed to be on the line at one and the same time, except as provided in Rule 292.

Disabled engine.

392. In the case of an engine or train becoming disabled and requiring assistance, or an accident occurring which renders it impossible for the engine to proceed, the Guard in charge must instruct the Driver to keep the engine stationary until his return, and then make the best of his way to the station whence assistance can be obtained; and inform the person in charge there of the circumstances, who will, on receipt of such information, allow a second engine to enter the line. The second engine must be accompanied by the Guard of the disabled engine or train, who must explain to the Driver where, and under what circumstances, the disabled engine or train is situated.

Guard of disabled train.

393. The Guard of the disabled engine or train will be held responsible for the safe and proper working of the line until both engines have left it, and it is again clear.

Absence of Guard.

394. Should an engine without a Guard become disabled, the Fireman, or, if necessary, the Driver, must perform the duties prescribed for the Guard.

ALEX. FRASER, *Major-Genl.*, R. E.,
Secy. to the Govt. of India.

65"

SECOND SUPPLEMENT TO THE

MYSORE GAZETTE.

No. 43 Published by Authority. of 1880.

BANGALORE, SATURDAY, OCTOBER 30, 1880.

OFFICIAL PAPERS.

Abstract of Season or Intermediate Reports for the Week ending 23rd October 1880.

Bangalore District.—Four inches 6 cents of rain at Bangalore. Crops in good condition. Prospects favorable. Tanks have received an abundant supply of water. Public health good. Murrain prevalent in parts. Price of ragi fallen; that of rice slightly risen.

Kolar District.—Five inches 1 cent of rain at Kolar. Crops improving. Prospects encouraging. Some tanks have received a partial supply of water. Public health good. Prices fallen.

Túmkúr District.—Three inches 61 cents of rain at Túmkúr. Rain fell in all the taluks. Crops in good condition. Prospects of season and public health good. Price of ragi fallen.

Mysore District.—Two inches 15 cents of rain at Mysore. Standing crops thriving. Prospects of season very good. Health good. Prices stationary.

Hassan District.—One inch 61 cents of rain at Hassan. Crops in good condition generally. More rain needed for the paddy crop below tanks in the Arkalgúd Taluk. Wheat and coriander were reaped in Haranhalli and sugar-cane in Nagamangala. Prospects favorable. Public health good. Cattle disease prevalent. Prices stationary.

Shimoga District.—Sixty-three cents of rain at Shimoga. Standing dry crops in fair condition. Wet crops much improved by recent rains. Arecanut and cardamoms are being picked. A few tanks have received a small supply of water. Prospects of season not very good. Public health fairly good. Murrain very prevalent among cattle. Prices stationary.

Kadur District.—Sixty-three cents of rain at Chikmagalur. More rain wanted in parts of the Tarikere Taluk. Crops in good condition. Prospects of season and public health good. Fever prevalent in parts of the Banavar and Tarikere Taluks. Murrain prevalent. Prices fallen.

Chitaldroog District.—Five inches 86 cents of rain at Chitaldroog. Crops in good condition. Javari, sajje and gingelly were harvested. White javari, channa and cotton seeds were sown in some parts. Prospects favorable. Public health good. Murrain prevalent in the Pavagada Taluk. Price of ragi risen.

Coorg.—Rain-fall at Mercara 1 inch 80 cents. Rice crops not promising so well. Ragi nearly reaped. Coffee ripening. Health generally good.

By Order,

T. SRINIVASAIENGAR,
For Revenue Secretary.

PROVINCE OF MYSORE.

Rain-fall and Season Report for the month of July 1880.

Districts.	Total Rain-fall in all the Taluks of the District.				Particulars of supply of water by rain to tanks.				Kandayam Lands newly taken up for cultivation and for which Razinamas have been tendered.													Seeds sown in July 1880.	State of Crops in July 1880.	Crops harvested in July 1880.
					No. of tanks supplied with water.		No. of tanks not supplied with water.		Kandayam of lands newly taken up for cultivation.						Kandayam of lands for which Razinamas have been tendered.									
	In July 1879.		In July 1880.		In July 1879.	In July 1880.	In July 1879.	In July 1880.	In July 1879.			In July 1880.			In July 1879.			In July 1880.					
	I.	C.	I.	C.	No.	No.	No.	No.	Rs.	A.	P.	Rs.	A.	P.	Rs.	A.	P.	Rs.	A.	P.			
lore...	57	51	30	73	1,491	679	259	10	1,568	3	3	3,596	7	5	25	0	0	0	0	0	Ragi, ballar, tuvar, gingelly, and samé.	Good.	Vaisak paddy.
...	60	73	25	22½	2,716	205	651	3,162	2,709	12	5	2,322	2	4	9	7	11	0	0	0	Ragi, ballar, tuvar, paddy, samé and sajjé.	In some parts good and in others withering for want of rain.	Nil.
ir ...	52	36	16	24	1,267	372	773	968	4,713	14	7	4,826	13	9	0	0	0	0	0	0	Ragi, ballar, tuvar, castor oil-seeds, paddy, samé, navane, javari, chillies, harka and sesamum.	In some parts good and in others withering for want of rain.	Nil.
...	62	27	13	22½	1,083	839	145	389	665	1	10	1,532	14	2	0	0	0	0	0	0	Ragi, paddy, &c.	Generally in good condition.	Javari, sesamum, black gram, green gram and ragi.
...	59	54	33	22	2,931	2,610	1,541	321	582	0	2	1,229	10	3	0	0	0	0	0	0	Dodda ragi, oil-seeds, ballar, chillies, &c.	Good.	Sesamum, tadagani and Vaisak plady.
a ...	91	40½	175	98½	4,844	3,792	47	1,073	2,157	3	0	2,121	6	0	218	8	0	0	0	0	Ragi, tuvar, javari, horse-gram, castor oil-seeds and paddy.	Paddy, sugar-cane, &c., good, are-canut suffers from koleroga.	Nil.
...	60	44	95	23	2,912	2,577	158	503	1,105	4	6	9,451	5	4	0	0	0	1,376	0	0	Ragi, ballar, paddy, sesamum, oil-seeds harka, navane, sajje, tuvar, and chillies.	Good.	Sugar-cane and paddy are being harvested.
roog	39	34¾	10	31	889	414	110	585	2,591	4	0	4,647	4	0	0	0	0	0	0	0	Javari, linseed, black and green-gram, ragi, navane, horse-gram, sajjé, paddy, ballar, baragu, tuvar, and castor oil-seeds.	Good.	No crops harvested during the month.
.....	483	60¼	400	16¼	18,143	11,488	2,984	8,072	16,092	11	9	29,727	15	3	252	15	11	1,376	0	0			

By Order,

T. SRINIVASAIENGAR,

For Revenue Secretary.

ated 23rd October 1880.

Mysore Government Press, Bangalore—1880.

SUPPLEMENT TO THE

MYSORE GAZETTE.

No. 44 Published by Authority. of 1880.

BANGALORE, SATURDAY, NOVEMBER 6, 1880.

OFFICIAL PAPERS.

Abstract of Season or Intermediate Reports for the Week ending 30th October 1880.

Bangalore District.—Rain-fall 3 inches 59 cents at Bangalore. Crops in good condition. Prospects very favorable. Public health good. Price of rice slightly fallen.

Kolar District.—One inch 12½ cents of rain fell at Kolar. Crops flourishing. Prospects hopeful. Public health good. Prices stationary.

Túmkúr District.—Two inches 36 cents of rain at Túmkúr. Rain fell in all the taluks. Standing crops in good condition. Prospects of season and public health good. Price of ragi fallen.

Mysore District.—One inch 91 cents of rain at Mysore. Standing crops thriving. Prospects of season very good. Public health good. Prices stationary.

Hassan District.—Five inches 59 cents of rain at Hassan. Crops in good condition. Sugar-cane was reaped in the Nagamangala Taluk. Bengal gram, coriander, &c., were sown in Haranhalli. Prospects hopeful. Public health good. Cattle disease abating. Prices stationary.

Shimoga District.—Three inches 53 cents of rain at Shimoga. Standing crops in fair condition. Bengal gram and wheat are being sown in the Honnali Taluk. Tanks have received a supply of water. Arecanut affected by rot in the Ságar Taluk. Prospects of season not very good. Health fair. Cattle still suffering from murrain, &c. Prices stationary.

Kadur District.—Four inches 32 cents of rain at District Head-quarters. Heavy rain in all the taluks. Standing crops thriving. Prospects of season and public health generally good. Fever still prevalent in portions of Banavar Taluk. Cattle disease still prevalent in parts. Prices stationary.

Chitaldroog District.—Four inches 20 cents of rain at Chitaldroog. Rain also fell in all the taluks. Crops in good condition except in the Budihal Taluk where rain fell in excess. Prospects favorable. Public health good, except in parts of the Hiriyur Taluk where fever prevails. Murrain prevalent in the Chitaldroog Taluk. Price of ragi and javari fallen, that of rice slightly risen.

Coorg.—Rain-fall 2 inches 66 cents. Rice prospects fair. Ragi reaped. Coffee ripening. Health good.

By Order,

T. SRINIVASAIENGAR,
For Revenue Secretary.

Prices Current of Food Grains in the Provinces of Mysore and Coorg during the Fortnight ending 30th September 1880.

QUANTITY PER RUPEE BY THE STANDARD SEERS OF 80 TOLAS, *vide* GOVERNMENT OF INDIA NO. 1—21, DATED 10TH FEBRUARY 1874.

Fortnight ending—30th September 1880.

No.	Districts.	Shops.	Wheat. Present Fortnight. seers.	chittaks.	Wheat. Past Fortnight. s.	c.	Wheat. Corresponding Fortnight in 1879. s.	c.	Barley. Present Fortnight. s.	c.	Barley. Past Fortnight. s.	c.	Barley. Corresponding Fortnight in 1879. s.	c.	Rice, best sort. Present Fortnight. s.	c.	Rice, best sort. Past Fortnight. s.	c.	Rice, best sort. Corresponding Fortnight in 1879. s.	c.
1	Bangalore.	Wholesale.	9	6	9	1	6	8	10	0	9	10	7	11	10	12	10	8	10	4
		Retail.	8	14	8	9	6	4	9	7	9	2	7	6	10	4	9	15	10	0
2	Kolar. ...	Wholesale.	...	...	...	...	7	6	7	10	7	10	...	...	11	0	11	0	12	2
		Retail.	...	...	...	...	7	2	7	6	7	6	...	...	10	12	10	12	11	3
3	Túmkúr ...	Wholesale.	9	8	8	8	7	8	9	8	8	8	5	8	12	8	12	8	13	0
		Retail.	9	0	8	0	7	0	9	0	8	0	5	0	12	0	12	0	12	8
4	Mysore ...	Wholesale.	7	4	7	4	5	12	...	...	...	...	...	...	11	4	11	4	10	4
		Retail.	7	0	7	0	5	8	...	...	...	...	...	...	11	0	11	0	10	0
5	Hassan ...	Wholesale.	...	...	...	...	...	...	...	...	...	...	...	...	...	...	...	...	...	...
		Retail.	9	0	9	0	5	0	9	8	9	0	6	8	12	8	13	0	10	0
6	Shimoga ...	Wholesale.	...	...	...	...	...	...	...	...	...	...	...	...	...	...	...	...	...	...
		Retail.	8	6	6	13	6	0	10	8	9	7	7	0	12	10	12	10	9	7
7	Kadur ...	Wholesale.	...	...	...	...	...	...	...	...	...	...	...	...	...	...	...	...	...	...
		Retail.	9	0	9	0	6	0	...	...	...	...	...	...	12	0	12	0	12	0
8	Chitaldroog.	Wholesale.	11	0	11	0	6	4	13	0	13	0	7	4	12	8	12	8	12	0
		Retail.	10	0	10	0	6	0	12	0	12	0	7	0	12	0	12	0	11	0
	Average ...	Wholesale.	9	4	8	15	6	11	10	0	9	11	6	13	11	9	11	9	11	8
		Retail.	8	12	8	5	6	2	9	10	9	2	6	9	11	10	11	11	10	12
	Coorg ...	Wholesale.	...	...	...	...	...	...	...	...	...	...	...	...	...	...	...	...	...	...
		Retail.	6	9	6	9	5	5	7	11	7	7	5	4	11	3	11	2	9	14

No.	Districts.	Shops.	Rice, common. Present Fortnight. s.	c.	Rice, common. Past Fortnight. s.	c.	Rice, common. Corresponding Fortnight in 1879. s.	c.	Great Millet, (Jola, Javar) *Holcus Sorghum.* Present Fortnight. s.	c.	Great Millet. Past Fortnight. s.	c.	Great Millet. Corresponding Fortnight in 1879. s.	c.	Bulrush Millet, (Kambu, Bajra) *Penicillaria Spicata.* Present Fortnight. s.	c.	Bulrush Millet. Past Fortnight. s.	c.	Bulrush Millet. Corresponding Fortnight in 1879. s.	c.
1	Bangalore.	Wholesale.	12	0	11	10	11	8	22	11	21	3	21	1	...	...	...	...	...	...
		Retail.	11	7	11	2	11	4	21	11	20	4	20	2	...	...	...	...	...	...
2	Kolar. ...	Wholesale.	14	6	14	6	13	4	...	...	...	...	...	...	32	10	32	10	28	0
		Retail.	14	1	14	1	13	0	...	...	...	...	...	...	32	6	32	6	27	12
3	Túmkúr ...	Wholesale.	13	8	13	0	13	8	...	...	...	...	...	...	...	...	...	...	...	...
		Retail.	13	0	12	8	13	0	...	...	...	...	...	...	...	...	...	...	...	...
4	Mysore ...	Wholesale.	12	0	12	4	10	12	...	...	...	24	8	...	...	...	...	...	...	...
		Retail.	11	12	12	0	10	8	...	...	...	24	0	...	...	...	...	...	...	...
5	Hassan ...	Wholesale.	...	...	...	...	...	...	...	...	...	...	...	...	...	...	...	...	...	...
		Retail.	13	0	13	8	11	0	...	...	...	...	...	...	...	...	...	...	...	...
6	Shimoga ...	Wholesale.	...	...	...	...	...	...	...	...	...	...	...	...	...	...	...	...	...	...
		Retail.	14	4	14	3	14	3	25	3	25	3	23	0	...	...	...	...	...	...
7	Kadur ...	Wholesale.	...	...	...	...	...	...	...	...	...	...	...	...	...	...	...	...	...	...
		Retail.	15	0	15	0	14	0	...	...	...	...	...	...	...	...	...	...	...	...
8	Chitaldroog.	Wholesale.	14	0	14	0	13	0	39	0	39	0	24	0	26	0	26	0	17	0
		Retail.	13	0	13	0	12	0	33	6	38	0	23	0	25	0	25	0	16	0
	Average ...	Wholesale.	13	3	13	1	12	6	30	13	30	2	23	3	29	5	29	5	22	8
		Retail.	13	3	13	3	12	6	28	4	27	12	22	8	28	11	28	11	21	14
	Coorg ...	Wholesale.	...	...	...	...	...	...	...	...	...	...	...	...	...	...	...	...	...	...
		Retail.	17	10	17	11	15	4	...	...	...	...	...	...	...	...	...	...	...	...

No.	Districts.	Shops.	Lesser Millets, Ragi, &c., (Kavaru, Varagu, Save, China, Koralu, Marwa, Nagli, &c.) *Panicum Miliaceum, Eleusine, Coracana, &c.* Present Fortnight. s.	c.	Lesser Millets. Past Fortnight. s.	c.	Lesser Millets. Corresponding Fortnight in 1879. s.	c.	Gram. Present Fortnight. s.	c.	Gram. Past Fortnight. s.	c.	Gram. Corresponding Fortnight in 1879. s.	c.	Firewood. Present Fortnight. s.	c.	Firewood. Past Fortnight. s.	c.	Firewood. Corresponding Fortnight in 1879. s.	c.	Salt. Present Fortnight. s.	c.	Salt. Past Fortnight. s.	c.	Salt. Corresponding Fortnight in 1879. s.	c.
1	Bangalore.	Wholesale.	28	14	29	5	23	8	29	5	29	5	19	5	...	...	...	...	...	...	10	12	10	12	10	12
		Retail.	27	14	28	7	22	8	28	5	28	4	18	13	84	0	84	0	78	0	10	0	10	0	10	8
2	Kolar. ...	Wholesale.	29	2	29	2	22	15	34	8	34	8	23	1	...	...	...	...	...	...	11	5	11	5	11	5
		Retail.	28	14	28	14	22	11	34	3	34	3	22	13	172	6	172	6	172	6	11	1	11	1	11	1
3	Túmkúr ...	Wholesale.	33	6	34	0	17	4	36	0	36	0	24	0	360	0	360	0	140	0	10	8	10	0	10	0
		Retail.	32	0	33	0	16	8	35	0	35	0	23	0	340	0	340	0	130	0	10	0	9	8	9	8
4	Mysore ...	Wholesale.	32	4	32	8	23	8	30	8	30	8	21	8	81	0	78	0	96	0	7	4	7	12	8	4
		Retail.	32	0	32	0	23	0	30	0	30	0	21	0	78	0	75	0	90	0	7	0	7	8	8	0
5	Hassan ...	Wholesale.	...	...	...	...	...	...	...	...	...	...	...	...	...	...	...	...	...	...	...	...	...	...	...	...
		Retail.	28	0	30	0	20	0	32	0	32	0	20	0	800	0	800	0	130	0	7	0	7	0	6	8
6	Shimoga ...	Wholesale.	...	...	...	...	...	...	...	...	...	...	...	...	...	...	...	...	...	...	...	...	...	...	...	...
		Retail.	36	12	34	10	33	6	25	2	23	2	18	14	480	0	480	0	480	0	8	7	8	7	7	14
7	Kadur ...	Wholesale.	...	...	...	...	...	...	...	...	...	...	...	...	...	...	...	...	...	...	...	...	...	...	...	...
		Retail.	24	0	24	0	26	0	20	0	20	0	18	0	60	0	60	0	60	0	9	0	8	0	9	0
8	Chitaldroog.	Wholesale.	47	10	47	5	23	8	32	0	32	0	21	0	100	0	100	0	100	0	9	8	9	8	8	0
		Retail.	46	0	45	5	22	1	30	0	30	0	17	3	100	0	100	0	100	0	9	0	9	0	8	0
	Average ...	Wholesale.	34	3	34	7	22	2	32	7	32	7	21	12	180	5	179	5	112	0	9	14	9	14	9	11
		Retail.	31	1[illegible]	32	0	23	4	29	1	29	1	19	15	264	5	263	15	155	0	8	15	8	13	8	13
	Coorg ...	Wholesale.	...	...	...	...	...	...	...	...	...	...	...	...	...	...	...	...	...	...	...	...	...	...	...	...
		Retail.	34	8	34	4	29	12	27	14	27	2	22	5	110	0	110	0	110	0	8	5	8	4	7	14

MYSORE CHIEF COMMISSIONER'S OFFICE,
BANGALORE, 29*th October* 1880.

By Order,
T. SRINIVASAIENGAR,
For Revenue Secretary.

Mysore Government Press, Bangalore.—1880.

SUPPLEMENT TO THE

MYSORE GAZETTE.

No. 45 Published by Authority. of 1880.

BANGALORE, SATURDAY, NOVEMBER 13, 1880.

OFFICIAL PAPERS.

Abstract of Season or Intermediate Reports for the Week ending 6th November 1880.

Bangalore District.—Ten cents of rain at Bangalore. Crops in good condition. Prospects very favorable. Public health good. Prices generally stationary.

Kolar District.—Crops thriving. Prospects encouraging. Public health generally good. Price of ragi fallen.

Túmkúr District.—Crops in good condition. Ragi harvested in some parts. Wet lands are being ploughed for rice cultivation. Prospects of season and public health good. Price of ragi fallen.

Mysore District.—Forty-seven cents of rain at Mysore. Ragi is being harvested. Paddy and other standing crops thriving. Prospects of season and public health good. Prices stationary.

Hassan District.—Six cents of rain at Hassan. Crops in good condition. Sugar-cane being cut in the Nagamangala Taluk. Prospects favorable. Public health good. The condition of cattle is satisfactory. Prices stationary.

Shimoga District.—One inch 6 cents of rain at Shimoga. Standing dry and wet crops in good condition. Paddy and ragi being reaped in several taluks and arecanut picked in the Ságar and Nagar Taluks. Tanks have all received a full supply of water. Prospects fairly good. Malarial fever prevalent. Cattle disease very prevalent. Prices stationary.

Kadur District.—One inch 21 cents of rain at Chikmagalur. Crops in good condition. Prospects of season and public health good. Fever however prevalent in parts of Banavar and Tarikere Taluks. Cattle disease still prevalent. Prices stationary.

Chitaldroog District.—Eight cents of rain at Chitaldroog. Crops in good condition. Ragi, javari, navane, sajje and wheat were harvested in parts. Prospects favorable. Health good. Cattle disease prevalent in the Chitaldroog, Davangere and Dodéri Taluks.

Coorg.—Rain-fall at Mercara 1 inch 74 cents. Rice prospects fair. Ragi reaped. Coffee picking commenced. Health good.

By Order,

C. RANGACHARLU.
Revenue Secretary.

Prices Current of Food Grains in the Provinces of Mysore and Coorg during the Fortnight ending 15*th October* 1880.

QUANTITY PER RUPEE BY THE STANDARD SEERS OF 80 TOLAS, *vide* GOVERNMENT OF INDIA NO. 1—21, DATED 10TH FEBRUARY 1874.

Fortnight ending—	No.	Districts.	Shops.	Wheat. Present Fortnight.						Wheat. Past Fortnight.						Wheat. Corresponding Fortnight in 1879.					
				seers.	chittaks.	s.	c.	s.	c.	s.	c.	s.	c.	s.	c.	s.	c.	s.	c.	s.	c.
15th October 1880.	1	Bangalore.	Wholesale.	8	12	9	6	6	12	9	4	10	0	7	11	10	10	10	12	10	8
			Retail.	8	4	8	14	6	8	8	12	9	7	7	7	10	2	10	4	10	4
	2	Kolar.	Wholesale.	...	...	...	...	7	6	7	10	7	10	...	...	11	0	11	0	12	2
			Retail.	...	...	...	...	7	2	7	6	7	6	...	...	10	12	10	12	11	13
	3	Tumkur	Wholesale.	9	8	9	8	7	8	9	8	9	8	6	0	12	8	12	8	13	0
			Retail.	9	0	9	0	7	0	9	0	9	0	5	8	12	0	12	0	12	8
	4	Mysore	Wholesale.	9	4	7	4	6	8	...	...	...	...	...	...	11	4	11	4	10	8
			Retail.	9	0	7	0	6	4	...	...	...	...	...	...	11	0	11	0	10	4
	5	Hassan	Wholesale.	...	...	...	...	...	...	...	...	...	...	...	...	...	...	...	...	...	...
			Retail.	10	0	9	0	6	4	11	0	9	8	7	0	12	0	12	8	12	0
	6	Shimoga	Wholesale.	...	...	...	...	...	...	...	...	...	...	...	...	...	...	...	...	...	...
			Retail.	8	6	8	6	6	5	10	8	10	8	7	6	12	10	12	10	9	7
	7	Kadur	Wholesale.	...	...	...	...	...	...	...	...	...	...	...	...	...	...	...	...	...	...
			Retail.	9	0	9	0	6	0	...	...	...	...	...	...	15	0	12	0	13	0
	8	Chitaldroog.	Wholesale.	11	0	11	0	6	0	13	0	13	0	7	0	13	0	12	8	11	0
			Retail.	10	0	10	0	6	0	12	0	12	0	7	0	12	0	12	0	10	0
		Average	Wholesale.	9	10	9	4	6	13	9	13	10	0	6	14	11	5	11	9	11	7
			Retail.	9	1	8	12	6	7	9	12	9	10	6	14	11	15	11	10	11	2
		Coorg	Wholesale.	...	...	...	...	...	...	...	...	...	...	...	...	...	...	...	...	...	...
			Retail.	6	6	6	9	5	5	7	5	7	11	5	5	11	9	11	3	9	12

Fortnight ending—	No.	Districts.	Shops.	Barley. Present Fortnight.						Barley. Past Fortnight.						Barley. Corresponding Fortnight in 1879.					
				s.	c.	s.	c.	s.	c.	s.	c.	s.	c.	s.	c.	s.	c.	s.	c.	s.	c.
15th October 1880.	1	Bangalore.	Wholesale.	11	10	12	0	11	11	25	8	22	11	20	12	...	...	...	...	...	...
			Retail.	10	8	11	7	11	8	24	8	21	11	19	12	...	...	...	...	...	...
	2	Kolar.	Wholesale.	14	6	14	6	13	13	...	...	...	...	...	...	32	10	32	10	28	0
			Retail.	14	1	14	1	13	9	...	...	...	...	...	...	32	6	32	6	27	12
	3	Tumkur	Wholesale.	13	8	13	8	13	8	...	...	...	...	...	...	...	...	...	...	...	...
			Retail.	13	0	13	0	13	0	...	...	...	...	...	...	...	...	...	...	...	...
	4	Mysore	Wholesale.	12	0	12	0	11	4	35	8	...	...	29	8	...	...	...	...	...	...
			Retail.	11	12	11	12	11	0	35	0	...	...	29	0	...	...	...	...	...	...
	5	Hassan	Wholesale.	...	...	...	...	...	...	...	...	...	...	...	...	...	...	...	...	...	...
			Retail.	16	0	13	0	12	0	...	...	...	...	...	...	...	...	...	...	...	...
	6	Shimoga	Wholesale.	...	...	...	...	...	...	...	...	...	...	...	...	...	...	...	...	...	...
			Retail.	14	11	14	4	13	10	33	10	25	3	25	5	...	...	...	...	...	...
	7	Kadur	Wholesale.	...	...	...	...	...	...	...	...	...	...	...	...	...	...	...	...	...	...
			Retail.	18	0	15	0	14	0	...	...	...	...	...	...	...	...	...	...	...	...
	8	Chitaldroog.	Wholesale.	14	0	14	0	12	0	33	0	39	0	26	0	42	0	26	0	18	0
			Retail.	13	0	13	0	11	0	37	0	38	0	25	0	40	0	25	0	16	0
		Average	Wholesale.	13	1	13	3	12	7	33	0	30	13	25	7	37	5	29	5	23	0
			Retail.	12	10	13	3	12	7	32	9	28	4	24	12	36	3	28	11	21	14
		Coorg	Wholesale.	...	...	...	...	...	...	...	...	...	...	...	...	...	...	...	...	...	...
			Retail.	17	12	17	10	15	6	...	...	...	...	...	...	...	...	...	...	...	...

Fortnight ending—	No.	Districts.	Shops.	Rice, best sort. Present Fortnight.						Rice, best sort. Past Fortnight.						Rice, best sort. Corresponding Fortnight in 1879.					
				s.	c.	s.	c.	s.	c.	s.	c.	s.	c.	s.	c.	s.	c.	s.	c.	s.	c.
15th October 1880.	1	Bangalore.	Wholesale.	10	10	10	12	10	8	11	10	12	0	11	11	25	8	22	11	20	12
			Retail.	10	2	10	4	10	4	10	8	11	7	11	8	24	8	21	11	19	12
	2	Kolar.	Wholesale.	11	0	11	0	12	2	14	6	14	6	13	13	...	...	...	...	...	...
			Retail.	10	12	10	12	11	13	14	1	14	1	13	9	...	...	...	...	...	...
	3	Tumkur	Wholesale.	12	8	12	8	13	0	13	8	13	8	13	8	...	...	...	...	...	...
			Retail.	12	0	12	0	12	8	13	0	13	0	13	0	...	...	...	...	...	...
	4	Mysore	Wholesale.	11	4	11	4	10	8	12	0	12	0	11	4	35	8	...	...	29	8
			Retail.	11	0	11	0	10	4	11	12	11	12	11	0	35	0	...	...	29	0
	5	Hassan	Wholesale.	...	...	...	...	...	...	...	...	...	...	...	...	...	...	...	...	...	...
			Retail.	12	0	12	8	12	0	16	0	13	0	12	0	...	...	...	...	...	...
	6	Shimoga	Wholesale.	...	...	...	...	...	...	...	...	...	...	...	...	...	...	...	...	...	...
			Retail.	12	10	12	10	9	7	14	11	14	4	13	10	33	10	25	3	25	5
	7	Kadur	Wholesale.	...	...	...	...	...	...	...	...	...	...	...	...	...	...	...	...	...	...
			Retail.	15	0	12	0	13	0	18	0	15	0	14	0	...	...	...	...	...	...
	8	Chitaldroog.	Wholesale.	13	0	12	8	11	0	14	0	14	0	12	0	33	0	39	0	26	0
			Retail.	12	0	12	0	10	0	13	0	13	0	11	0	37	0	38	0	25	0
		Average	Wholesale.	11	5	11	9	11	7	13	1	13	3	12	7	33	0	30	13	25	7
			Retail.	11	15	11	10	11	2	12	10	13	3	12	7	32	9	28	4	24	12
		Coorg	Wholesale.	...	...	...	...	...	...	...	...	...	...	...	...	...	...	...	...	...	...
			Retail.	11	9	11	3	9	12	17	12	17	10	15	6	...	...	...	...	...	...

Fortnight ending—	No.	Districts.	Shops.	Rice, common. Present Fortnight.						Rice, common. Past Fortnight.						Rice, common. Corresponding Fortnight in 1879.					
				s.	c.	s.	c.	s.	c.	s.	c.	s.	c.	s.	c.	s.	c.	s.	c.	s.	c.
15th October 1880.	1	Bangalore.	Wholesale.	11	10	12	0	11	11	...	...	...	...	...	...	28	5	28	14	24	2
			Retail.	10	8	11	7	11	8	...	...	...	...	...	...	27	5	27	14	23	2
	2	Kolar.	Wholesale.	14	6	14	6	13	13	...	...	...	...	...	...	27	1	29	2	26	0
			Retail.	14	1	14	1	13	9	...	...	...	...	...	...	26	13	28	14	25	12
	3	Tumkur	Wholesale.	13	8	13	8	13	8	...	...	...	...	...	...	36	0	33	0	17	4
			Retail.	13	0	13	0	13	0	...	...	...	...	...	...	35	0	32	0	16	8
	4	Mysore	Wholesale.	12	0	12	0	11	4	...	...	...	...	...	...	30	8	32	4	25	8
			Retail.	11	12	11	12	11	0	...	...	...	...	...	...	30	0	32	0	25	0
	5	Hassan	Wholesale.	...	...	...	...	...	...	...	...	...	...	...	...	...	...	...	...	...	...
			Retail.	16	0	13	0	12	0	...	...	...	...	...	...	32	0	28	0	20	0
	6	Shimoga	Wholesale.	...	...	...	...	...	...	...	...	...	...	...	...	...	...	...	...	...	...
			Retail.	14	11	14	4	13	10	33	10	25	3	25	5	37	4	36	12	32	9
	7	Kadur	Wholesale.	...	...	...	...	...	...	...	...	...	...	...	...	...	...	...	...	...	...
			Retail.	18	0	15	0	14	0	...	...	...	...	...	...	22	0	24	0	28	0
	8	Chitaldroog.	Wholesale.	14	0	14	0	12	0	33	0	39	0	26	0	44	0	47	10	23	5
			Retail.	13	0	13	0	11	0	37	0	38	0	25	0	43	0	46	0	23	0
		Average	Wholesale.	13	1	13	3	12	7	33	0	30	13	25	7	37	5	29	5	23	0
			Retail.	12	10	13	3	12	7	32	9	28	4	24	12	36	3	28	11	21	14
		Coorg	Wholesale.	...	...	...	...	...	...	...	...	...	...	...	...	...	...	...	...	...	...
			Retail.	17	12	17	10	15	6	...	...	...	...	...	...	33	2	34	8	28	15

Fortnight ending—	No.	Districts.	Shops.	Great Millet, (Jola, Javar) *Holcus Sorghum.* Present Fortnight.						Great Millet. Past Fortnight.						Great Millet. Corresponding Fortnight in 1879.					
				s.	c.	s.	c.	s.	c.	s.	c.	s.	c.	s.	c.	s.	c.	s.	c.	s.	c.
15th October 1880.	1	Bangalore.	Wholesale.	...	...	...	...	...	...	...	...	...	...	...	...	...	...	...	...	...	...
			Retail.	...	...	...	...	...	...	...	...	...	...	...	...	...	...	...	...	...	...
	2	Kolar.	Wholesale.	...	...	...	...	...	...	...	...	...	...	...	...	...	...	...	...	...	...
			Retail.	...	...	...	...	...	...	...	...	...	...	...	...	...	...	...	...	...	...
	3	Tumkur	Wholesale.	...	...	...	...	...	...	...	...	...	...	...	...	...	...	...	...	...	...
			Retail.	...	...	...	...	...	...	...	...	...	...	...	...	...	...	...	...	...	...
	4	Mysore	Wholesale.	35	8	...	...	29	8	...	...	...	...	...	...	...	...	...	...	...	...
			Retail.	35	0	...	...	29	0	...	...	...	...	...	...	...	...	...	...	...	...
	5	Hassan	Wholesale.	...	...	...	...	...	...	...	...	...	...	...	...	...	...	...	...	...	...
			Retail.	...	...	...	...	...	...	...	...	...	...	...	...	...	...	...	...	...	...
	6	Shimoga	Wholesale.	...	...	...	...	...	...	...	...	...	...	...	...	...	...	...	...	...	...
			Retail.	33	10	25	3	25	5	...	...	...	...	...	...	...	...	...	...	...	...
	7	Kadur	Wholesale.	...	...	...	...	...	...	...	...	...	...	...	...	...	...	...	...	...	...
			Retail.	...	...	...	...	...	...	...	...	...	...	...	...	...	...	...	...	...	...
	8	Chitaldroog.	Wholesale.	33	0	39	0	26	0	42	0	26	0	18	0	44	0	47	10	23	5
			Retail.	37	0	38	0	25	0	40	0	25	0	16	0	43	0	46	0	23	0
		Average	Wholesale.	33	0	30	13	25	7	37	5	29	5	23	0	33	3	34	3	23	4
			Retail.	32	9	28	4	24	12	36	3	28	11	21	14	31	11	31	15	24	4
		Coorg	Wholesale.	...	...	...	...	...	...	...	...	...	...	...	...	...	...	...	...	...	...
			Retail.	...	...	...	...	...	...	...	...	...	...	...	...	...	...	...	...	...	...

Fortnight ending—	No.	Districts.	Shops.	Bulrush Millet, (Kambu, Bajra) *Penicillaria Spicata.* Present Fortnight.						Bulrush Millet. Past Fortnight.						Bulrush Millet. Corresponding Fortnight in 1879.					
				s.	c.	s.	c.	s.	c.	s.	c.	s.	c.	s.	c.	s.	c.	s.	c.	s.	c.
15th October 1880.	1	Bangalore.	Wholesale.	...	...	...	...	...	...	...	...	...	...	...	...	...	...	...	...	...	...
			Retail.	...	...	...	...	...	...	...	...	...	...	...	...	...	...	...	...	...	...
	2	Kolar.	Wholesale.	32	10	32	10	28	0	27	1	29	2	26	0	34	8	34	8	23	1
			Retail.	32	6	32	6	27	12	26	13	28	14	25	12	34	3	34	3	22	13
	3	Tumkur	Wholesale.	...	...	...	...	...	...	36	0	33	0	17	4	36	0	36	0	24	0
			Retail.	...	...	...	...	...	...	35	0	32	0	16	8	35	0	35	0	23	0
	4	Mysore	Wholesale.	...	...	...	...	...	...	30	8	32	4	25	8	32	8	30	8	21	8
			Retail.	...	...	...	...	...	...	30	0	32	0	25	0	32	0	30	0	21	0
	5	Hassan	Wholesale.	...	...	...	...	...	...	...	...	...	...	...	...	...	...	...	...	...	...
			Retail.	...	...	...	...	...	...	32	0	28	0	20	0	32	0	32	0	20	0
	6	Shimoga	Wholesale.	...	...	...	...	...	...	...	...	...	...	...	...	...	...	...	...	...	...
			Retail.	...	...	...	...	...	...	37	4	36	12	32	9	26	4	23	2	19	15
	7	Kadur	Wholesale.	...	...	...	...	...	...	...	...	...	...	...	...	...	...	...	...	...	...
			Retail.	...	...	...	...	...	...	22	0	24	0	28	0	18	0	20	0	18	0
	8	Chitaldroog.	Wholesale.	42	0	26	0	18	0	44	0	47	10	23	5	33	0	32	0	24	0
			Retail.	40	0	25	0	16	0	43	0	46	0	23	0	32	0	30	0	23	0
		Average	Wholesale.	37	5	29	5	23	0	33	3	34	3	23	4	33	1	32	7	22	6
			Retail.	36	3	28	11	21	14	31	11	31	15	24	4	29	12	29	1	20	13
		Coorg	Wholesale.	...	...	...	...	...	...	...	...	...	...	...	...	...	...	...	...	...	...
			Retail.	...	...	...	...	...	...	33	2	34	8	28	15	27	6	27	14	21	15

Fortnight ending—	No.	Districts.	Shops.	Lesser Millets, Ragi, &c., (Kavaru, Varagu, Save, China, Koralu, Marwa, Nagli, &c.) *Panicum Miliaceum, Eleusine, Coracana, &c.* Present Fortnight.						Lesser Millets. Past Fortnight.						Lesser Millets. Corresponding Fortnight in 1879.					
				s.	c.	s.	c.	s.	c.	s.	c.	s.	c.	s.	c.	s.	c.	s.	c.	s.	c.
15th October 1880.	1	Bangalore.	Wholesale.	28	5	28	14	24	2	29	8	29	5	19	6	...	...	...	...	...	...
			Retail.	27	5	27	14	23	2	28	8	28	5	18	13	84	0	84	0	84	0
	2	Kolar.	Wholesale.	27	1	29	2	26	0	34	8	34	8	23	1	...	...	...	...	...	...
			Retail.	26	13	28	14	25	12	34	3	34	3	22	13	172	6	172	6	172	6
	3	Tumkur	Wholesale.	36	0	33	0	17	4	36	0	36	0	24	0	360	0	360	0	140	0
			Retail.	35	0	32	0	16	8	35	0	35	0	23	0	340	0	340	0	130	0
	4	Mysore	Wholesale.	30	8	32	4	25	8	32	8	30	8	21	8	81	0	81	0	90	0
			Retail.	30	0	32	0	25	0	32	0	30	0	21	0	78	0	78	0	84	0
	5	Hassan	Wholesale.	...	...	...	...	...	...	...	...	...	...	...	...	...	...	...	...	...	...
			Retail.	32	0	28	0	20	0	32	0	32	0	20	0	800	0	800	0	100	0
	6	Shimoga	Wholesale.	...	...	...	...	...	...	...	...	...	...	...	...	...	...	...	...	...	...
			Retail.	37	4	36	12	32	9	26	4	23	2	19	15	480	0	480	0	480	0
	7	Kadur	Wholesale.	...	...	...	...	...	...	...	...	...	...	...	...	...	...	...	...	...	...
			Retail.	22	0	24	0	28	0	18	0	20	0	18	0	60	0	60	0	60	0
	8	Chitaldroog.	Wholesale.	44	0	47	10	23	5	33	0	32	0	24	0	100	0	100	0	100	0
			Retail.	43	0	46	0	23	0	32	0	30	0	23	0	100	0	100	0	100	0
		Average	Wholesale.	33	3	34	3	23	4	33	1	32	7	22	6	180	5	180	5	110	0
			Retail.	31	11	31	15	24	4	29	12	29	1	20	13	264	5	264	5	151	5
		Coorg	Wholesale.	...	...	...	...	...	...	...	...	...	...	...	...	...	...	...	...	...	...
			Retail.	33	2	34	8	28	15	27	6	27	14	21	15	110	0	110	0	110	0

Fortnight ending—	No.	Districts.	Shops.	Gram. Present Fortnight.						Gram. Past Fortnight.						Gram. Corresponding Fortnight in 1879.					
				s.	c.	s.	c.	s.	c.	s.	c.	s.	c.	s.	c.	s.	c.	s.	c.	s.	c.
15th October 1880.	1	Bangalore.	Wholesale.	29	8	29	5	19	6	...	...	...	...	...	...	10	12	10	12	10	12
			Retail.	28	8	28	5	18	13	84	0	84	0	84	0	10	0	10	0	10	8
	2	Kolar.	Wholesale.	34	8	34	8	23	1	...	...	...	...	...	...	11	5	11	5	11	5
			Retail.	34	3	34	3	22	13	172	6	172	6	172	6	11	1	11	1	11	1
	3	Tumkur	Wholesale.	36	0	36	0	24	0	360	0	360	0	140	0	10	8	10	8	9	8
			Retail.	35	0	35	0	23	0	340	0	340	0	130	0	10	0	10	0	9	0
	4	Mysore	Wholesale.	32	8	30	8	21	8	81	0	81	0	90	0	7	8	7	4	8	4
			Retail.	32	0	30	0	21	0	78	0	78	0	84	0	7	4	7	0	8	0
	5	Hassan	Wholesale.	...	...	...	...	...	...	...	...	...	...	...	...	...	...	...	...	...	...
			Retail.	32	0	32	0	20	0	800	0	800	0	100	0	7	0	7	0	7	0
	6	Shimoga	Wholesale.	...	...	...	...	...	...	...	...	...	...	...	...	...	...	...	...	...	...
			Retail.	26	4	23	2	19	15	480	0	480	0	480	0	8	6	8	7	7	14
	7	Kadur	Wholesale.	...	...	...	...	...	...	...	...	...	...	...	...	...	...	...	...	...	...
			Retail.	18	0	20	0	18	0	60	0	60	0	60	0	9	0	9	0	9	0
	8	Chitaldroog.	Wholesale.	33	0	32	0	24	0	100	0	100	0	100	0	9	8	9	8	8	0
			Retail.	32	0	30	0	23	0	100	0	100	0	100	0	9	0	9	0	8	0
		Average	Wholesale.	33	1	32	7	22	6	180	5	180	5	110	0	9	12	9	14	9	9
			Retail.	29	12	29	1	20	13	264	5	264	5	151	5	8	15	8	15	8	13
		Coorg	Wholesale.	...	...	...	...	...	...	...	...	...	...	...	...	...	...	...	...	...	...
			Retail.	27	6	27	14	21	15	110	0	110	0	110	0	8	3	8	5	7	15

Fortnight ending—	No.	Districts.	Shops.	Firewood. Present Fortnight.						Firewood. Past Fortnight.						Firewood. Corresponding Fortnight in 1879.					
				s.	c.	s.	c.	s.	c.	s.	c.	s.	c.	s.	c.	s.	c.	s.	c.	s.	c.
15th October 1880.	1	Bangalore.	Wholesale.	...	...	...	...	...	...	...	...	...	...	...	...	10	12	10	12	10	12
			Retail.	84	0	84	0	84	0	10	0	10	0	10	8	10	0	10	0	10	8
	2	Kolar.	Wholesale.	...	...	...	...	...	...	11	5	11	5	11	5	11	5	11	5	11	5
			Retail.	172	6	172	6	172	6	11	1	11	1	11	1	11	1	11	1	11	1
	3	Tumkur	Wholesale.	360	0	360	0	140	0	10	8	10	8	9	8	10	8	10	8	9	8
			Retail.	340	0	340	0	130	0	10	0	10	0	9	0	10	0	10	0	9	0
	4	Mysore	Wholesale.	81	0	81	0	90	0	7	8	7	4	8	4	7	8	7	4	8	4
			Retail.	78	0	78	0	84	0	7	4	7	0	8	0	7	4	7	0	8	0
	5	Hassan	Wholesale.	...	...	...	...	...	...	...	...	...	...	...	...	...	...	...	...	...	...
			Retail.	800	0	800	0	100	0	7	0	7	0	7	0	7	0	7	0	7	0
	6	Shimoga	Wholesale.	...	...	...	...	...	...	...	...	...	...	...	...	...	...	...	...	...	...
			Retail.	480	0	480	0	480	0	8	6	8	7	7	14	8	6	8	7	7	14
	7	Kadur	Wholesale.	...	...	...	...	...	...	...	...	...	...	...	...	...	...	...	...	...	...
			Retail.	60	0	60	0	60	0	9	0	9	0	9	0	9	0	9	0	9	0
	8	Chitaldroog.	Wholesale.	100	0

SUPPLEMENT TO THE

MYSORE GAZETTE.

No. 46 Published by Authority. of 1880.

BANGALORE, SATURDAY, NOVEMBER 20, 1880.

OFFICIAL PAPERS.

Abstract of Season or Intermediate Reports for the Week ending 13*th November* 1880.

Bangalore District.—Fifty-two cents of rain at Bangalore. Crops in good condition. Untimely rain has caused some damage to ragi crops ready for reaping. Prospects of season fair. Health good. Prices fallen.

Kolar District.—Sixty-nine cents of rain at Kolar. Crops in good condition, ragi, sajjé and samé are being reaped. Prospects favorable. Health good. Prices stationary.

Túmkúr District.—One inch 4 cents of rain at Túmkúr. Crops in good condition. Ragi being reaped in parts. Prospects of season and public health good. Price of ragi fallen.

Mysore District.—Standing crops flourishing. Ragi is harvested. Prospects of season and public health good. Slight fall in the price of rice.

Hassan District.—One inch 91 cents of rain at Hassan. Crops in good condition. Coffee berries are ripening, but the continuance of the rains prevents them from being dried. Prospects favorable. Health good. Rinderpest prevalent in the Haranhalli Taluk. Prices stationary.

Shimoga District.—Sixty cents of rain at Shimoga. Standing crops doing well. Prospects of season fairly good. Malarial fevers and lung affections very prevalent. Murrain still prevalent among cattle and mortality therefrom very high. Prices stationary.

Kadur District.—One inch 36 cents of rain at Chikmagalur. Crops in good condition. Arecanut, coffee and cardamom are being picked. Prospects of season and public health generally good. Cattle disease still prevalent in the Chikmagalur and Lakvalli Taluks. Prices stationary.

Chitaldroog District.—One inch 37½ cents of rain at Chitaldroog. Crops in good condition. Javari, ragi, navane, &c., were harvested in parts. Prospects favorable. Health good.

Coorg.—Rain-fall 1 inch 74 cents at Mercara. Rice promising well. Ragi not yet thrashed. Coffee picking commenced. Health fair.

By Order,

C. RANGACHARLU.
Revenue Secretary.

Prices Current of Food Grains in the Provinces of Mysore and Coorg during the Fortnight ending 31st October 1880.

QUANTITY PER RUPEE BY THE STANDARD SEERS OF 80 TOLAS. *vide* GOVERNMENT OF INDIA NO. 1—21, DATED 10TH FEBRUARY 1874.

No.	Districts.	Shops.	Wheat. Present Fortnight.		Wheat. Past Fortnight.		Wheat. Corresponding Fortnight in 1879.		Barley. Present Fortnight.		Barley. Past Fortnight.		Barley. Corresponding Fortnight in 1879.		Rice, best sort. Present Fortnight.		Rice, best sort. Past Fortnight.		Rice, best sort. Corresponding Fortnight in 1879.		Rice, common. Present Fortnight.		Rice, common. Past Fortnight.		Rice, common. Corresponding Fortnight in 1879.	
			seers.	chittaks.	s.	c.	s.	c.	s.	c.	s.	c.	s.	c.	s.	c.	s.	c.	s.	c.	s.	c.	s.	c.	s.	c.
1	Bangalore.	Wholesale.	9	6	8	12	6	8	9	14	9	4	7	7	10	8	10	10	10	9	11	11	11	10	11	13
		Retail.	8	14	8	4	6	4	9	6	8	12	7	3	10	0	10	2	10	5	11	2	10	8	11	10
2	Kolar. ...	Wholesale.	...	...	...	...	7	6	7	10	7	10	...	...	11	0	11	0	12	2	14	6	14	6	14	6
		Retail.	...	...	...	...	7	2	7	6	7	6	...	...	10	12	10	12	11	13	14	1	14	1	14	2
3	Túmkúr ...	Wholesale.	9	8	9	8	7	8	9	8	9	8	6	0	12	0	12	8	13	0	13	8	13	8	13	8
		Retail.	9	0	9	0	7	0	9	0	9	0	5	8	11	8	12	0	12	8	13	0	13	0	13	0
4	Mysore ...	Wholesale.	7	12	9	4	7	4	...	...	...	...	...	...	10	12	11	4	10	12	11	5	12	0	11	4
		Retail.	7	8	9	0	7	0	...	...	...	...	...	...	10	8	11	0	10	8	11	1	11	12	11	0
5	Hassan ...	Wholesale.	...	...	...	...	...	...	...	...	...	...	...	...	...	...	...	...	...	...	...	...	...	...	...	...
		Retail.	9	0	10	0	5	8	9	8	11	0	7	8	12	8	12	0	11	0	13	0	16	0	12	0
6	Shimoga ...	Wholesale.	...	...	...	...	...	...	...	...	...	...	...	...	...	...	...	...	...	...	...	...	...	...	...	...
		Retail.	8	6	8	6	6	5	10	8	10	8	7	5	12	10	12	10	9	7	14	11	14	11	13	10
7	Kadur ...	Wholesale.	...	...	...	...	...	...	...	...	...	...	...	...	...	...	...	...	...	...	...	...	...	...	...	...
		Retail.	9	0	9	0	8	0	...	...	...	...	...	...	16	0	15	0	13	0	19	0	18	0	14	0
8	Chitaldroog.	Wholesale.	10	0	11	0	6	0	12	0	13	0	7	0	12	0	13	0	11	0	13	0	14	0	12	0
		Retail.	10	0	10	0	6	0	12	0	12	0	7	0	12	0	12	0	10	0	13	0	13	0	11	0
	Average ...	Wholesale.	9	2	9	10	6	15	9	12	9	13	6	13	11	4	11	5	11	8	12	2	13	1	12	9
		Retail.	8	13	9	1	6	10	9	10	9	12	6	14	12	0	11	15	11	1	13	10	13	14	12	9
	Coorg ...	Wholesale.	...	...	...	...	...	...	...	...	...	...	...	...	...	...	...	...	...	...	...	...	...	...	...	...
		Retail.	6	11	6	6	5	5	7	7	7	5	5	8	11	8	11	9	9	14	18	6	17	12	15	8

No.	Districts.	Shops.	Great Millet, (Jola, Javar) *Holcus Sorghum.* Present Fortnight.		Great Millet. Past Fortnight.		Great Millet. Corresponding Fortnight in 1879.		Bulrush Millet, (Kambu, Bajra) *Penicillaria Spicata.* Present Fortnight.		Bulrush Millet. Past Fortnight.		Bulrush Millet. Corresponding Fortnight in 1879.		Lesser Millets, Ragi, &c., (Kavaru, Varagu, Save, China, Koralu, Marwa, Nagli, &c.) *Panicum Miliaceum, Eleusine, Coracana, &c.* Present Fortnight.		Lesser Millets. Past Fortnight.		Lesser Millets. Corresponding Fortnight in 1879.		Gram. Present Fortnight.		Gram. Past Fortnight.		Gram. Corresponding Fortnight in 1879.	
			s.	c.	s.	c.	s.	c.	s.	c.	s.	c.	s.	c.	s.	c.	s.	c.	s.	c.	s.	c.	s.	c.	s.	c.
1	Bangalore.	Wholesale.	26	4	25	8	22	12	...	...	...	...	...	...	31	0	28	5	24	1	30	5	29	8	19	2
		Retail.	25	4	24	8	21	12	...	...	...	...	...	...	30	0	27	5	23	1	29	5	28	8	18	11
2	Kolar. ...	Wholesale.	...	...	...	...	...	...	31	5	32	10	28	0	31	3	27	1	26	0	34	8	34	8	25	6
		Retail.	...	...	...	...	...	...	31	1	32	6	27	12	30	15	26	13	25	12	34	3	34	3	25	2
3	Túmkúr ...	Wholesale.	...	...	...	...	...	...	...	...	...	...	...	...	36	0	36	0	17	4	37	0	36	0	24	0
		Retail.	...	...	...	...	...	...	...	...	...	...	...	...	35	0	35	0	16	8	36	0	35	0	23	0
4	Mysore ...	Wholesale.	32	8	35	8	27	8	...	...	...	...	...	...	30	8	30	8	25	8	32	8	32	8	21	8
		Retail.	32	0	35	0	27	0	...	...	...	...	...	...	30	0	30	0	25	0	32	0	32	0	21	0
5	Hassan ...	Wholesale.	...	...	...	...	...	...	...	...	...	...	...	...	...	...	...	...	...	...	...	...	...	...	...	...
		Retail.	...	...	...	...	...	...	...	...	...	...	...	...	28	0	32	0	19	0	32	0	32	0	21	0
6	Shimoga ...	Wholesale.	...	...	...	...	...	...	...	...	...	...	...	...	...	...	...	...	...	...	...	...	...	...	...	...
		Retail.	33	10	33	10	24	15	...	...	...	...	...	...	37	4	37	4	32	0	26	4	26	4	18	6
7	Kadur ...	Wholesale.	...	...	...	...	...	...	...	...	...	...	...	...	...	...	...	...	...	...	...	...	...	...	...	...
		Retail.	...	...	...	...	...	...	...	...	...	...	...	...	26	0	22	0	22	0	22	0	18	0	16	0
8	Chitaldroog.	Wholesale.	38	0	38	0	25	0	40	0	42	0	16	0	42	5	44	0	23	0	40	0	33	0	23	0
		Retail.	38	0	37	0	24	8	40	0	40	0	16	0	42	5	43	0	22	13	40	0	32	0	22	0
	Average ...	Wholesale.	32	4	33	0	25	1	35	10	37	5	22	0	34	3	33	3	23	3	34	14	33	1	22	10
		Retail.	32	3	32	9	24	9	35	8	36	3	21	14	32	7	31	11	23	4	31	7	29	12	20	10
	Coorg ...	Wholesale.	...	...	...	...	...	...	...	...	...	...	...	...	...	...	...	...	...	...	...	...	...	...	...	...
		Retail.	...	...	...	...	...	...	...	...	...	...	...	...	33	1	33	2	26	6	27	6	27	6	20	11

No.	Districts.	Shops.	Firewood. Present Fortnight.		Firewood. Past Fortnight.		Firewood. Corresponding Fortnight in 1879.		Salt. Present Fortnight.		Salt. Past Fortnight.		Salt. Corresponding Fortnight in 1879.	
			s.	c.	s.	c.	s.	c.	s.	c.	s.	c.	s.	c.
1	Bangalore.	Wholesale.	...	...	...	...	...	...	10	12	10	12	10	12
		Retail.	80	0	84	0	84	0	10	0	10	0	10	8
2	Kolar. ...	Wholesale.	...	...	...	...	...	...	11	5	11	5	11	5
		Retail.	172	6	172	6	172	6	11	1	11	1	11	1
3	Túmkúr ...	Wholesale.	360	0	360	0	140	0	10	8	10	8	9	8
		Retail.	340	0	340	0	130	0	10	0	10	0	9	0
4	Mysore ...	Wholesale.	81	0	81	0	81	0	7	12	7	8	8	0
		Retail.	78	0	78	0	78	0	7	8	7	4	7	12
5	Hassan ...	Wholesale.	...	...	...	...	...	...	...	...	...	...	...	...
		Retail.	800	0	800	0	200	0	7	0	7	0	7	0
6	Shimoga ...	Wholesale.	...	...	...	...	...	...	...	...	...	...	...	...
		Retail.	480	0	480	0	480	0	8	6	8	6	7	14
7	Kadur ...	Wholesale.	...	...	...	...	...	...	...	...	...	...	...	...
		Retail.	60	0	60	0	60	0	9	0	9	0	8	0
8	Chitaldroog.	Wholesale.	100	0	100	0	100	0	9	0	9	8	8	0
		Retail.	100	0	100	0	100	0	9	0	9	0	8	0
	Average ...	Wholesale.	180	5	180	5	107	0	9	14	9	15	9	8
		Retail.	263	13	264	5	163	1	9	0	8	15	8	10
	Coorg ...	Wholesale.	...	...	...	...	...	...	...	...	...	...	...	...
		Retail.	110	0	110	0	110	0	8	2	8	3	8	3

MYSORE CHIEF COMMISSIONER'S OFFICE,
BANGALORE, 18*th November* 1880.

By Order,
C. RANGACHARLU,
Revenue Secretary.

PROVINCE OF MYSORE.

Rain-fall and Season Report for the month of August 1880.

Districts.	Total Rain-fall in all the Taluks of the District.				Particulars of supply of water by rain to tanks.				Kandayam Lands newly taken up for cultivation and for which Razinamas have been tendered.										Seeds sown in August 1880.	State of Crops in August 1880.	Crops harvested in August 1880.
					No. of tanks supplied with water.		No. of tanks not supplied with water.		Kandayam of lands newly taken up for cultivation.						Kandayam of lands for which Razinamas have been tendered.						
	In August 1879.		In August 1880.		In August 1879.	In August 1880.	In August 1879.	In August 1880.	In August 1879.			In August 1880.			In August 1879.			In August 1880.			
	I.	C.	I.	C.	No.	No.	No.	No.	Rs.	A.	P.	Rs.	A.	P.	Rs.	A.	P.	Rs.	A.	P.			
...ore...	23	24	47	29	1,509	1,419	241	601	2,106	7	10	2,128	13	10	0	0	0	4	12	0	Kartik paddy, gram, samé, gingelly, ragi and ballar.	Good.	Nil.
...	19	45	35	61	743	814	2,624	2,553	3,005	15	8	2,522	1	4	0	0	0	0	0	0	Horse-gram, inferior sesamum, paddy and samé.	Good in some parts and withering in others for want of rain.	Sajje and sesamum.
...ur ..	19	86	20	7½	775	476	565	864	5,307	3	0	2,623	5	4	0	0	0	0	0	0	Samé, gram, paddy, sesamum, green-gram, ragi, ballar, harka, castor seeds and tuvar.	Fair.	Green and black gram in Chiknayakanhalli and Honnavalli.
...e ...	9	3	45	55¼	726	934	502	244	666	6	3	592	10	11	0	0	0	0	0	0	Ragi, black and green gram, horse-gram, ballar and gingelly.	Generally good.	Javari and sesamum.
...	26	69	35	14	2,931	2,931	...	...	861	6	1	801	0	6	0	0	0	0	0	0	Chillies, horse-gram, gingelly, sugar-cane, ragi, javari, tuvar, paddy and black gram.	Good.	Gid-ragi, tadagani, gingelly, javari, sugar-cane, black and green gram, coriander and sesamums.
...ga ...	194	60¾	58	40¾	4,844	2,793	47	2,072	1,054	14	0	983	2	0	30	8	0	411	12	0	Horse-gram, ragi, navane, paddy and castor oil-seeds.	Generally good.	Green-gram in Honnali, arecanut in Ságar.
...	87	64½	36	16	2,475	2,687	605	393	1,003	12	8	1,220	8	9	0	0	0	0	0	0	Ragi, ballar, navane, horse-gram, cotton, paddy, sugar-cane, chillies and oil-seeds.	Good.	Coriander, green and black gram, wheat, ragi, garlic, onions, cardamoms and sesamums.
...droog	13	89¾	14	99½	889	407	110	592	1,740	7	0	2,296	12	0	0	0	0	14	0	0	Javari, gingelly, black and green gram, paddy, cotton, ragi, castor oil-seeds, sajjé, ballar, tuvar, samé, navane and horse-gram.	Good.	Black and green-gram in Davangere and Budihal. Paddy and gingelly in Budihal.
.....	394	42	293	23	14,892	12,241	4,694	7,319	15,746	8	6	13,168	6	8	30	8	0	430	8	0			

By Order,

C. RANGACHARLU,

Revenue Secretary.

Dated 12th November 1880.

Mysore Government Press, Bangalore—1880.

SUPPLEMENT TO THE

MYSORE GAZETTE.

No. 47 Published by Authority. of 1880.

BANGALORE, SATURDAY, NOVEMBER 27, 1880.

OFFICIAL PAPERS.

Abstract of Season or Intermediate Reports for the Week ending 20th November 1880.

Bangalore District.—Eight cents of rain at Bangalore. Crops in good condition, but such as are being harvested have been partially damaged by untimely rains. Prospects favorable. Health good. Price of rice slightly fallen.

Kolar District.—Five cents of rain at Kolar. Crops in good condition. Reaping of ragi continues. Lands being prepared for Vaishak cultivation in parts. Prospects favorable. Health good. Price of ragi fallen.

Túmkúr District.—Crops in good condition. Prospects of season and public health good.

Mysore District.—One inch 87 cents of rain at Mysore. Standing crops flourishing. Prospects very good. Public health good. Price of rice rising.

Hassan District.—Twenty-seven cents of rain at Hassan. Crops in good condition. Ragi is being reaped and sugar-cane cut in parts. Wheat, Bengal gram and coriander are being sown in Narsipur. Prospects of season and public health good. Cattle disease slightly prevalent in parts. Prices risen.

Shimoga District.—Nineteen cents of rain at Shimoga. Standing crops in good condition. Paddy, ragi and jola are being harvested. Arecanut and cardamoms are being picked. Prospects of season good. Fever and bronchial affections somewhat prevalent. Loss of cattle from murrain still heavy. Prices stationary.

Kadur District.—Thirty-four cents of rain at Chikmagalur. Crops in good condition. Coffee, cardamoms and arecanut are being picked. Prospects of season and public health good. Fever however prevalent in parts of the Banavar Taluk. Cattle disease prevalent generally throughout the District.

Chitaldroog District.—Crops in good condition. Javari, navane and ragi were harvested in parts. Prospects favorable. Public health good. Cattle disease prevalent in parts. Prices stationary.

Coorg.—Rain-fall 74 cents at Mercara. Rice prospects fair. Threshing ragi not commenced, crop rather short. Coffee picking begun. Health good.

By Order,

C. RANGACHARLU.
Revenue Secretary.

Mysore Government Press, Bangalore.—1880.

SUPPLEMENT TO THE

MYSORE GAZETTE.

No. 48 Published by Authority. of 1880.

BANGALORE, SATURDAY, DECEMBER 4, 1880.

OFFICIAL PAPERS.

Abstract of Season or Intermediate Reports for the Week ending 27th November 1880.

Bangalore District.—One inch 40 cents of rain at Bangalore. Kartik paddy crops are flourishing. Dry crops have been damaged to a considerable extent by unseasonable rains. Prospects favorable. Health good. Prices risen.

Kolar District.—Three inches 40 cents of rain at Kolar. Crops in good condition generally. Ragi crop spoiled by unseasonable rains. Prospects of season and public health generally good. Price of ragi risen.

Túmkúr District.—One inch 86 cents of rain at Túmkúr. Reaping of ragi continues, but in some parts crops have been partly damaged by excessive rain. Prospects of season and public health good. Prices stationary.

Mysore District.—Two inches 61 cents of rain at Mysore. Rain rather excessive, and apprehensions are felt about the standing crops which are however doing well at present. Prospects very good. Public health good. Prices stationary.

Hassan District.—One inch 54 cents of rain at Hassan. Crops in good condition. Dod ragi, navané, &c., being reaped in parts. Prospects favorable. Public health good. Cattle disease prevalent in parts of the Haranhalli Taluk. Price of rice has risen.

Shimoga District.—Seventy-two cents of rain at Shimoga. Unseasonable rains have retarded harvesting and caused some damage to crops. Arecanut and cardamoms were somewhat injured by the rain. Prospects good. Malarial fevers, &c., prevalent. Murrain still prevalent and casualties among cattle are considerable. Prices stationary.

Kadur District.—One inch 40 cents of rain at Chikmagalur. Crops in good condition generally. Ragi which had been harvested in the Banavar Taluk has been damaged by the rains. Prospects of season and public health good. Cattle disease abated.

Chitaldroog District.—Five inches 60 cents of rain at Chitaldroog. Crops generally in good condition, though somewhat injured by the heavy and unseasonable rains. Prospects of season and public health good. Murrain has appeared in some taluks. Prices fallen.

Coorg.—Rain fall 1 inch 58 cents. Rice beaten down by rain. Ragi not yet threshed. Crop not very good. Coffee being picked. Health fair.

By Order,

C. RANGACHARLU,
Revenue Secretary.

Prices Current of Food Grains in the Provinces of Mysore and Coorg during the Fortnight ending 15th November 1880.

QUANTITY PER RUPEE BY THE STANDARD SEERS OF 80 TOLAS, *vide* GOVERNMENT OF INDIA NO. 1—21, DATED 10TH FEBRUARY 1874.

Forming No.	Districts.	Shops.	Wheat. Present Fortnight.		Wheat. Past Fortnight.		Wheat. Corresponding Fortnight in 1879.		Barley. Present Fortnight.		Barley. Past Fortnight.		Barley. Corresponding Fortnight in 1879.		Rice, best sort. Present Fortnight.		Rice, best sort. Past Fortnight.		Rice, best sort. Corresponding Fortnight in 1879.		Rice, common. Present Fortnight.		Rice, common. Past Fortnight.		Rice, common. Corresponding Fortnight in 1879.		Great Millet, (Jola, Javar) *Holcus Sorghum.* Present Fortnight.		Great Millet. Past Fortnight.		Great Millet. Corresponding Fortnight in 1879.		Bulrush Millet, (Kambu, Bajra) *Penicillaria Spicata.* Present Fortnight.		Bulrush Millet. Past Fortnight.		Bulrush Millet. Corresponding Fortnight in 1879.		Lesser Millets, Ragi, &c., (Kavaru, Varagu, Save, China, Koralu, Marwa, Nagli, &c.) *Panicum Miliaceum, Eleusine, Coracana, &c.* Present Fortnight.		Lesser Millets. Past Fortnight.		Lesser Millets. Corresponding Fortnight in 1879.		Gram. Present Fortnight.		Gram. Past Fortnight.		Gram. Corresponding Fortnight in 1879.		Firewood. Present Fortnight.		Firewood. Past Fortnight.		Firewood. Corresponding Fortnight in 1879.		Salt. Present Fortnight.		Salt. Past Fortnight.		Salt. Corresponding Fortnight in 1879.	
			seers.	chittaks.	s.	c.	s.	c.	s.	c.	s.	c.	s.	c.	s.	c.	s.	c.	s.	c.	s.	c.	s.	c.	s.	c.	s.	c.	s.	c.	s.	c.	s.	c.	s.	c.	s.	c.	s.	c.	s.	c.	s.	c.	s.	c.	s.	c.	s.	c.	s.	c.	s.	c.	s.	c.	s.	c.	s.	c.
1	Bangalore.	Wholesale.	8	14	9	6	6	11	9	12	9	14	7	8	10	1	10	8	10	5	12	2	11	11	11	11	25	7	26	4	21	14	...	...	...	...	...	...	32	5	31	0	24	0	33	9	30	5	21	2	...	...	...	...	...	...	10	12	10	12	10	10
		Retail.	8	7	8	14	6	5	9	4	9	6	7	4	9	9	10	0	10	0	11	8	11	2	11	3	24	7	25	4	20	14	...	...	...	...	...	...	31	5	30	0	23	6	32	9	29	5	20	11	76	13	80	0	84	0	10	0	10	0	10	6
2	Kolar. ...	Wholesale.	...	...	...	...	7	6	7	10	7	10	...	...	11	0	11	0	12	2	14	6	14	6	14	6	...	...	...	...	...	...	32	10	31	5	28	0	31	3	31	3	27	1	34	8	34	8	25	6	...	...	...	...	...	...	11	5	11	5	11	5
		Retail.	...	...	...	...	7	2	7	6	7	6	...	...	10	12	10	12	11	13	14	1	14	1	14	2	...	...	...	...	...	...	32	6	31	1	27	12	30	15	30	15	26	13	34	3	34	3	25	2	172	6	172	6	172	6	11	1	11	1	11	1
3	Túmkúr ...	Wholesale.	9	8	9	8	7	8	9	8	9	8	6	0	11	8	12	0	12	8	12	8	13	8	13	8	...	...	...	...	...	...	...	...	...	...	...	...	40	0	36	0	30	0	42	0	37	0	24	0	360	0	360	0	140	0	10	8	10	8	9	8
		Retail.	9	0	9	0	7	0	9	0	9	0	5	8	11	0	11	8	12	0	12	0	13	0	13	0	...	...	...	...	...	...	...	...	...	...	...	...	39	0	35	0	29	0	41	0	36	0	23	0	340	0	340	0	130	0	10	0	10	0	9	0
4	Mysore ...	Wholesale.	10	4	7	12	7	4	...	...	...	...	...	...	10	4	10	12	10	12	10	12	11	5	11	4	30	8	32	8	25	8	...	...	...	...	...	...	30	8	30	8	25	8	30	8	32	8	22	8	81	0	81	0	81	0	8	4	7	12	7	12
		Retail.	10	0	7	8	7	0	...	...	...	...	...	...	10	0	10	8	10	8	10	8	11	1	11	0	30	0	32	0	25	0	...	...	...	...	...	...	30	0	30	0	25	0	30	0	32	0	22	0	78	0	78	0	78	0	8	0	7	8	7	8
5	Hassan ...	Wholesale.	...	...	...	...	...	...	...	...	...	...	...	...	...	...	...	...	...	...	...	...	...	...	...	...	...	...	...	...	...	...	...	...	...	...	...	...	...	...	...	...	...	...	...	...	...	...	...	...	...	...	...	...	...	...	...	...	...	...
		Retail.	10	0	9	0	5	0	12	0	9	8	5	8	12	0	12	8	11	0	13	0	13	0	13	0	...	...	...	...	...	...	...	...	...	...	...	...	30	0	28	0	23	0	32	0	32	0	21	0	600	0	800	0	300	0	7	0	7	0	8	0
6	Shimoga ...	Wholesale.	...	...	...	...	...	...	...	...	...	...	...	...	...	...	...	...	...	...	...	...	...	...	...	...	...	...	...	...	...	...	...	...	...	...	...	...	...	...	...	...	...	...	...	...	...	...	...	...	...	...	...	...	...	...	...	...	...	...
		Retail.	8	6	8	6	6	5	9	7	10	8	7	6	12	10	12	10	9	7	14	11	14	11	13	10	33	10	33	10	21	0	...	...	...	...	...	...	37	13	37	4	28	14	26	4	26	4	18	6	480	0	480	0	480	0	8	6	8	6	7	14
7	Kadur ...	Wholesale.	...	...	...	...	...	...	...	...	...	...	...	...	...	...	...	...	...	...	...	...	...	...	...	...	...	...	...	...	...	...	...	...	...	...	...	...	...	...	...	...	...	...	...	...	...	...	...	...	...	...	...	...	...	...	...	...	...	...
		Retail.	9	0	9	0	6	0	...	...	...	...	...	...	16	0	16	0	12	0	19	0	19	0	14	0	...	...	...	...	...	...	...	...	...	...	...	...	26	0	26	0	22	0	22	0	22	0	16	0	60	0	60	0	60	0	9	0	9	0	8	0
8	Chitaldroog.	Wholesale.	10	0	10	0	6	0	12	0	12	0	7	0	12	0	12	0	11	0	13	0	13	0	12	0	38	0	38	0	24	0	40	0	40	0	20	0	44	5	42	5	23	5	40	0	40	0	19	0	100	0	100	0	100	0	9	0	9	0	8	0
		Retail.	10	0	10	0	6	0	12	0	12	0	7	0	12	0	12	0	10	0	13	0	13	0	11	0	38	0	38	0	24	0	40	0	40	0	20	0	44	5	42	5	23	0	40	0	40	0	19	0	100	0	100	0	100	0	9	0	9	0	8	0
	Average ...	Wholesale.	9	10	9	2	6	15	9	11	9	12	6	13	10	15	11	4	11	5	12	9	12	12	12	9	31	5	32	4	23	11	36	5	35	10	24	0	35	11	34	3	26	0	36	2	34	14	22	6	180	5	180	5	107	0	9	15	9	14	9	7
		Retail.	9	4	8	13	6	5	9	13	9	10	6	8	11	12	12	0	10	13	13	7	13	10	12	10	31	8	32	3	22	13	36	3	35	8	23	14	33	11	32	7	25	2	32	4	31	7	20	10	238	6	263	13	175	9	9	1	9	0	8	12
	Coorg ...	Wholesale.	...	...	...	...	...	...	...	...	...	...	...	...	...	...	...	...	...	...	...	...	...	...	...	...	...	...	...	...	...	...	...	...	...	...	...	...	...	...	...	...	...	...	...	...	...	...	...	...	...	...	...	...	...	...	...	...	...	...
		Retail.	6	12	6	11	5	7	7	8	7	7	5	11	11	6	11	8	9	14	18	0	18	6	15	8	...	...	...	...	...	...	...	...	...	...	...	...	33	8	33	1	25	10	27	5	27	6	19	13	110	0	110	0	110	0	7	12	8	2	8	6

15th November 1880.

MYSORE CHIEF COMMISSIONER'S OFFICE,
Bangalore, 1880.

By Order,

C. RANGACHARLU,
Revenue Secretary.

SUPPLEMENT TO THE

MYSORE GAZETTE

No. 49 Published by Authority. of 1880.

BANGALORE, SATURDAY, DECEMBER 11, 1880.

OFFICIAL PAPERS.

Abstract of Season or Intermediate Reports for the Week ending 4th December 1880.

Bangalore District.—Ninety-five cents of rain at Bangalore. Paddy crops flourishing. Dry crops have been partially damaged by unseasonable rain. Prospects fair. Health good. Fever and ague prevalent in parts. Price of ragi slightly fallen.

Kolar District.—Ninety-nine cents of rain at Kolar. Crops in good condition. Ragi crop partially injured by unseasonable rains. Prospects hopeful. Health good, Prices generally stationary.

Túmkúr District.—One inch 38 cents of rain at Túmkúr. Standing crops in good condition. Prospects fair. Health good. Prices stationary.

Mysore District.—Thirty-one cents of rain at Mysore. Paddy crops doing well. Some standing crops have been damaged by recent rains. Prospects of season and public health good. Price of ragi slightly risen, that of rice slightly fallen.

Hassan District.—Forty-nine cents of rain at Hassan. Crops in good condition. In some parts however they have suffered from excessive rain. Prospects of season and public health good. Price of ragi risen.

Shimoga District.—Paddy, ragi, jola and navane are being harvested; and arecanut and cardamoms picked. Prospects good. Malarial fevers and lung affections very prevalent. Heavy losses of cattle from murrain still occur. Prices fallen in a few taluks, stationary in the remainder.

Kadur District.—One inch 48 cents of rain at Chikmagalur. Heavy rains have injured the crops in the Banavar and Lakvalli Taluks. Otherwise crops doing well. Prospects good. Fever prevalent in parts of the Banavar Taluk. Cattle disease generally prevalent. Prices stationary.

Chitaldroog District.—Sixty cents of rain at Chitaldroog. Standing crops in good condition. In parts of the Davangere and Chitaldroog Taluks, the dry crops were damaged. Paddy, javari, ragi, green-gram, &c., were harvested. Prospects good. Fever prevalent in parts, as also murrain among cattle. Price of ragi risen.

Coorg.—Rain-fall 4 cents. No further damage to rice. Prospects fair. Threshing ragi not commenced. Picking of coffee continues. Health fair.

By Order,

C. RANGACHARLU,
Revenue Secretary.

Mysore Government Press, Bangalore.—1880.